Cambridge IGCSE

Cambridge International Examinations
Cambridge International General Certificate of Secondary Education

CANDIDATE NAME									
CENTRE NUMBER						CANDIDATE NUMBER				

CHEMISTRY **0620/33**

Paper 3 (Extended) **October/November 2014**

1 hour 15 minutes

Candidates answer on the Question Paper.

No Additional Materials are required.

READ THESE INSTRUCTIONS FIRST

Write your Centre number, candidate number and name on all the work you hand in.
Write in dark blue or black pen.
You may use an HB pencil for any diagrams or graphs.
Do not use staples, paper clips, glue or correction fluid.
DO **NOT** WRITE IN ANY BARCODES.

Answer **all** questions.
Electronic calculators may be used.
A copy of the Periodic Table is printed on page 12.
You may lose marks if you do not show your working or if you do not use appropriate units.

At the end of the examination, fasten all your work securely together.
The number of marks is given in brackets [ ] at the end of each question or part question.

The syllabus is approved for use in England, Wales and Northern Ireland as a Cambridge International Level 1/Level 2 Certificate.

© UCLES 2014

CAMBRIDGE International Examinations

1 For each of the following elements give **one** physical property and **one** chemical property.

(a) bromine (Br_2)

View solution

physical property .....

chemical property .....

[2]

(b) carbon$_{graphite}$(C)

View solution

physical property .....

chemical property .....

[2]

(c) manganese (Mn)

View solution

physical property .....

chemical property .....

[2]

[Total: 6]

2 Compound X is a colourless liquid at room temperature.

(a) A sample of pure X was slowly heated from –5.0 °C, which is below its melting point, to 90 °C, which is above its boiling point. Its temperature is measured every minute and the results are represented on the graph.

View solution

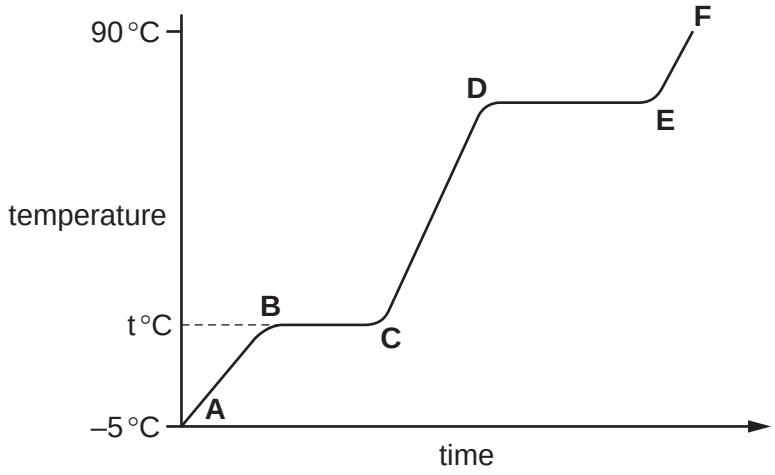

(i) Complete the equation for the equilibrium present in the region **BC**.

X(s) ⇌ ..... [1]

(ii) What is the significance of temperature t °C?

..... [1]

(iii) What is the physical state of compound X in the region **EF**?

..... [1]

(iv) What would be the difference in the region **BC** if an impure sample of X had been used?

..... [1]

(b) Compound X is a hydrocarbon. It contains 85.7% of carbon. The mass of one mole of X is 84 g.

(i) What is the percentage of hydrogen in the compound ?

..... [1]

(ii) Calculate the empirical formula of X. Show your working.

View solution

empirical formula = ... [3]

(iii) What is the molecular formula of compound X?

..... [1]

[Total: 9]

3 In 1985 the fullerenes were discovered. They are solid forms of the element carbon. The structure of the C_{60} fullerene is given below.

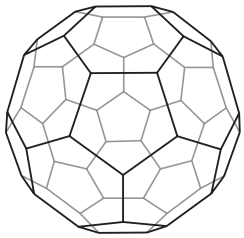

(a) (i) In the C_{60} fullerene, how many other carbon atoms is each carbon atom bonded to?

View solution

..... [1]

(ii) Another fullerene has a relative molecular mass of 840.
How many carbon atoms are there in one molecule of this fullerene?

View solution

..... [1]

(b) Fullerenes are soluble in liquid hydrocarbons such as octane. The other solid forms of carbon are insoluble.
Describe how you could obtain crystals of fullerenes from soot which is a mixture of fullerenes and other solid forms of carbon.

.....

.....

.....

..... [3]

(c) A mixture of a fullerene and potassium is an excellent conductor of electricity.

View solution

(i) Which other form of solid carbon is a good conductor of electricity?

..... [1]

(ii) Explain why metals, such as potassium, are good conductors of electricity.

.....

..... [2]

(iii) The mixture of fullerene and potassium has to be stored out of contact with air. There are substances in unpolluted air which will react with potassium.
Name **two** potassium compounds which could be formed when potassium is exposed to air.

..... [2]

[Total: 10]

© UCLES 2014

4 A fuel cell produces electrical energy by the oxidation of a fuel by oxygen.
The fuel is usually hydrogen but methane and methanol are two other fuels which may be used.
A diagram of a hydrogen fuel cell is given below.

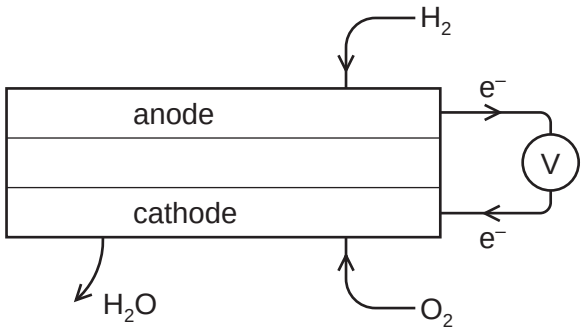

(a) When the fuel is hydrogen, the only product is water.
What additional product would be formed if methane was used?

View solution

..... [1]

(b) Write the equation for the chemical reaction that takes place in a hydrogen fuel cell.

View solution

..... [1]

(c) **(i)** At which electrode does oxidation occur? Explain your choice.

View solution

..... [1]

(ii) Write an ionic equation for the reaction at this electrode.

View solution

..... [2]

(d) Fuel cells are used to propel cars.
Give **two** advantages of a fuel cell over a gasoline-fuelled engine.

View solution

.....

..... [2]

[Total: 7]

5 **(a)** Sodium chlorate(I) decomposes to form sodium chloride and oxygen. The rate of this reaction is very slow at room temperature provided the sodium chlorate(I) is stored in a dark bottle to prevent exposure to light.

View solution

$$2NaClO \rightarrow 2NaCl + O_2$$

The rate of this decomposition can be studied using the following experiment.

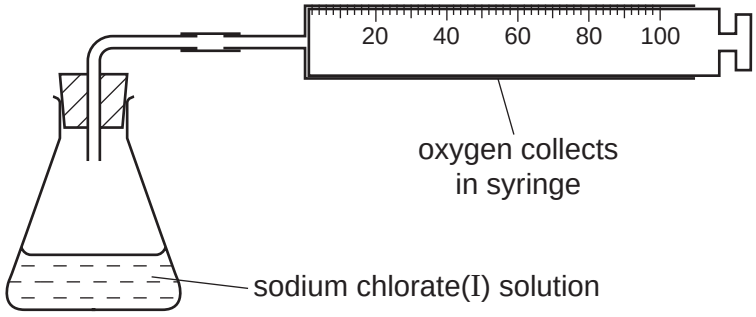

Sodium chlorate(I) is placed in the flask and 0.2 g of copper(II) oxide is added. This catalyses the decomposition of the sodium chlorate(I) and the volume of oxygen collected is measured every minute. The results are plotted to give a graph of the type shown below.

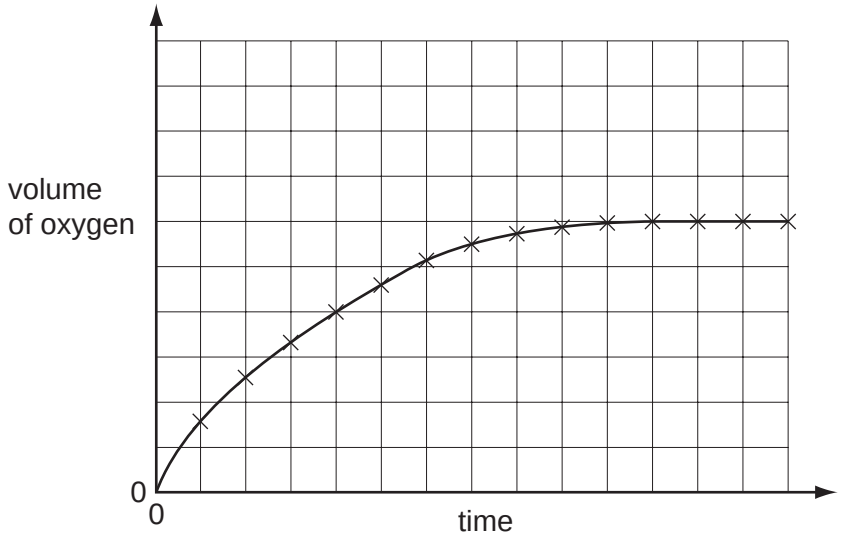

(i) Explain why the gradient (slope) of this graph decreases with time.

.....

..... [2]

(ii) Cobalt(II) oxide is a more efficient catalyst for this reaction than copper(II) oxide.
Sketch, on the grid, the graph for the reaction catalysed by cobalt(II) oxide.
All other conditions were kept constant. [2]

(iii) What can you deduce from the comment that sodium chlorate(I) has to be shielded from light?

.....

..... [1]

(iv) Explain, in terms of collisions between particles, why the initial gradient would be steeper if the experiment was repeated at a higher temperature.

.....

.....

.....

..... [3]

(b) The ions present in aqueous sodium chloride are $Na^+(aq)$, $Cl^-(aq)$, $H^+(aq)$ and $OH^-(aq)$.

The electrolysis of concentrated aqueous sodium chloride forms three products. They are hydrogen, chlorine and sodium hydroxide.

(i) Explain how these **three** products are formed. Give ionic equations for the reactions at the electrodes.

.....

.....

.....

.....

..... [4]

(ii) If the solution of the electrolyte is stirred, chlorine reacts with sodium hydroxide to form sodium chlorate(I), sodium chloride and water.
Write an equation for this reaction.

View solution

Cl_2 + ...NaOH $\rightarrow$ ..... + ... + ...

[2]

[Total: 14]

6 Rubidium and strontium are very reactive metals at the top of the reactivity series. Because their ions have different charges, their compounds behave differently when heated.

(a) The formulae of the ions of these two elements are Rb^+ and Sr^{2+}.
Explain why these metals, which are in different groups, form ions which have different charges.

.....

..... [2]

(b) Strontium carbonate is similar to calcium carbonate. It is insoluble in water and it decomposes when heated. Rubidium carbonate is soluble in water and does not decompose when heated.

(i) Describe a method to prepare a pure sample of the insoluble salt, strontium carbonate, by precipitation.

.....

.....

.....

.....

..... [4]

(ii) Complete the equation for the decomposition of strontium carbonate.

View solution

$$SrCO_3 \rightarrow \text{.....} + \text{.....}$$

[1]

(c) Metal nitrates decompose when heated.

View solution

(i) Rubidium nitrate decomposes as follows:

$$2RbNO_3 \rightarrow 2RbNO_2 + O_2$$

What is the name of the compound $RbNO_2$?

..... [1]

(ii) The nitrates of most other metals decompose in a different way.
Complete the equation for the decomposition of strontium nitrate.

View solution

$$\text{.....}Sr(NO_3)_2 \rightarrow \text{.....} + 4NO_2 + \text{.....}$$

[2]

[Total: 10]

7 Butane is oxidised to a mixture of carboxylic acids by oxygen in the presence of a catalyst.
The acids formed are methanoic acid, ethanoic acid and propanoic acid – the first three members of the carboxylic acid homologous series.

(a) (i) Give the name and structural formula of the fourth member of this series.

View solution

name .....

structural formula showing all the atoms and bonds

[3]

(ii) State **three** characteristics of a homologous series.

View solution

.....

.....

..... [3]

(iii) All members of this series are weak acids.

View solution

What is meant by the term *weak acid*?

.....

.....

..... [3]

(b) Carboxylic acids react with alcohols to form esters. Ethanol reacts with ethanoic acid to form the ester ethyl ethanoate, $CH_3COOCH_2CH_3$.

(i) Give the name and formula of the ester which is formed from methanol and propanoic acid.

name .....

formula .....

[2]

(ii) What is the name of the ester which has the formula CH_3COOCH_3?

..... [1]

View solution

(c) (i) Complete the equation for the oxidation of butane to propanoic acid.

View solution

$$3C_4H_{10} + ...O_2 \rightarrow 4C_2H_5COOH + ...H_2O$$

[1]

(ii) Name **another** compound which can be oxidised to propanoic acid.

..... [1]

[Total: 14]

View solution

8 **(a)** Describe how cobalt chloride paper can be used to test for the presence of water.

.....

..... [2]

(b) Complete the description of the preparation of crystals of the soluble salt, cobalt(II) chloride-6-water, $CoCl_2.6H_2O$, from the insoluble base, cobalt(II) carbonate.

View solution

$$CoCO_3(s) + 2HCl(aq) \rightarrow CoCl_2(aq) + CO_2(g) + H_2O(l)$$

50 cm^3 of dilute hydrochloric acid, concentration 2.2 mol/dm^3, was heated and cobalt(II) carbonate was added in small amounts until .....

.....

.....

.....

.....

..... [4]

(c) 6.31 g of cobalt(II) chloride-6-water crystals were obtained. Calculate the percentage yield to 1 decimal place.

View solution

number of moles of HCl in 50 cm^3 of acid, concentration 2.2 mol/dm^3 = ...

maximum number of moles of $CoCl_2.6H_2O$ which could be formed = ...

mass of 1 mole of $CoCl_2.6H_2O$ = 238 g

maximum yield of $CoCl_2.6H_2O$ = ... g

percentage yield = ...%

[4]

[Total: 10]

DATA SHEET
The Periodic Table of the Elements

	Group																	
	I	II									III	IV	V	VI	VII	0
																4 **He** Helium 2
				1 **H** Hydrogen 1							11 **B** Boron 5	12 **C** Carbon 6	14 **N** Nitrogen 7	16 **O** Oxygen 8	19 **F** Fluorine 9	20 **Ne** Neon 10
	7 **Li** Lithium 3	9 **Be** Beryllium 4									27 **Al** Aluminium 13	28 **Si** Silicon 14	31 **P** Phosphorus 15	32 **S** Sulfur 16	35.5 **Cl** Chlorine 17	40 **Ar** Argon 18
	23 **Na** Sodium 11	24 **Mg** Magnesium 12									70 **Ga** Gallium 31	73 **Ge** Germanium 32	75 **As** Arsenic 33	79 **Se** Selenium 34	80 **Br** Bromine 35	84 **Kr** Krypton 36
	39 **K** Potassium 19	40 **Ca** Calcium 20	45 **Sc** Scandium 21	48 **Ti** Titanium 22	51 **V** Vanadium 23	52 **Cr** Chromium 24	55 **Mn** Manganese 25	56 **Fe** Iron 26	59 **Co** Cobalt 27	59 **Ni** Nickel 28	64 **Cu** Copper 29	65 **Zn** Zinc 30	112 **Cd** Cadmium 48	119 **Sn** Tin 50	122 **Sb** Antimony 51	128 **Te** Tellurium 52	127 **I** Iodine 53	131 **Xe** Xenon 54
	85 **Rb** Rubidium 37	88 **Sr** Strontium 38	89 **Y** Yttrium 39	91 **Zr** Zirconium 40	93 **Nb** Niobium 41	96 **Mo** Molybdenum 42	**Tc** Technetium 43	101 **Ru** Ruthenium 44	103 **Rh** Rhodium 45	106 **Pd** Palladium 46	108 **Ag** Silver 47	112 **Cd** Cadmium 48	115 **In** Indium 49	119 **Sn** Tin 50	122 **Sb** Antimony 51	128 **Te** Tellurium 52	127 **I** Iodine 53	131 **Xe** Xenon 54
	133 **Cs** Caesium 55	137 **Ba** Barium 56	139 **La** Lanthanum 57 *	178 **Hf** Hafnium 72	181 **Ta** Tantalum 73	184 **W** Tungsten 74	186 **Re** Rhenium 75	190 **Os** Osmium 76	192 **Ir** Iridium 77	195 **Pt** Platinum 78	197 **Au** Gold 79	201 **Hg** Mercury 80	204 **Tl** Thallium 81	207 **Pb** Lead 82	209 **Bi** Bismuth 83	**Po** Polonium 84	**At** Astatine 85	**Rn** Radon 86
	Fr Francium 87	226 **Ra** Radium 88	227 **Ac** Actinium 89 †															

140 **Ce** Cerium 58	141 **Pr** Praseodymium 59	144 **Nd** Neodymium 60	**Pm** Promethium 61	150 **Sm** Samarium 62	152 **Eu** Europium 63	157 **Gd** Gadolinium 64	159 **Tb** Terbium 65	162 **Dy** Dysprosium 66	165 **Ho** Holmium 67	167 **Er** Erbium 68	169 **Tm** Thulium 69	173 **Yb** Ytterbium 70	175 **Lu** Lutetium 71
232 **Th** Thorium 90	**Pa** Protactinium 91	238 **U** Uranium 92	**Np** Neptunium 93	**Pu** Plutonium 94	**Am** Americium 95	**Cm** Curium 96	**Bk** Berkelium 97	**Cf** Californium 98	**Es** Einsteinium 99	**Fm** Fermium 100	**Md** Mendelevium 101	**No** Nobelium 102	**Lr** Lawrencium 103

*58-71 Lanthanoid series
†90-103 Actinoid series

Key

a
X
b

a = relative atomic mass
X = atomic symbol
b = proton (atomic) number

The volume of one mole of any gas is 24 dm^3 at room temperature and pressure (r.t.p.).

Permission to reproduce items where third-party owned material protected by copyright is included has been sought and cleared where possible. Every reasonable effort has been made by the publisher (UCLES) to trace copyright holders, but if any items requiring clearance have unwittingly been included the publisher will be pleased to make amends at the earliest possible opportunity.

Cambridge International Examinations is part of the Cambridge Assessment Group. Cambridge Assessment is the brand name of University of Cambridge Local Examinations Syndicate (UCLES), which is itself a department of the University of Cambridge.

© UCLES 2014