Cambridge IGCSE

Cambridge International Examinations
Cambridge International General Certificate of Secondary Education

CANDIDATE NAME									
CENTRE NUMBER						CANDIDATE NUMBER			

CHEMISTRY **0620/22**

Paper 2 **October/November 2015**

1 hour 15 minutes

Candidates answer on the Question Paper.

No Additional Materials are required.

READ THESE INSTRUCTIONS FIRST

Write your Centre number, candidate number and name in the spaces at the top of this page.
Write in dark blue or black pen.
You may use an HB pencil for any diagrams or graphs.
Do not use staples, paper clips, glue or correction fluid.
DO **NOT** WRITE IN ANY BARCODES.

Answer **all** questions.
Electronic calculators may be used.
A copy of the Periodic Table is printed on page 16.
You may lose marks if you do not show your working or if you do not use appropriate units.

At the end of the examination, fasten all your work securely together.
The number of marks is given in brackets [ ] at the end of each question or part question.

The syllabus is approved for use in England, Wales and Northern Ireland as a Cambridge International Level 1/Level 2 Certificate.

This document consists of **14** printed pages and **2** blank pages.

© UCLES 2015

CAMBRIDGE International Examinations

1 The structures of six substances are shown below.

A

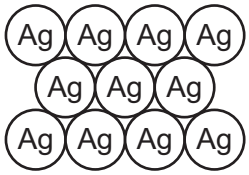

B

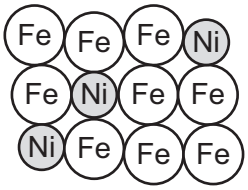

C

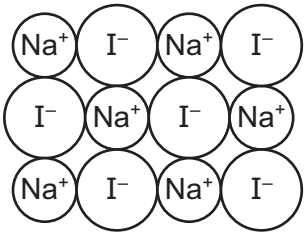

D

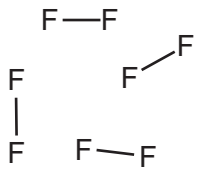

E

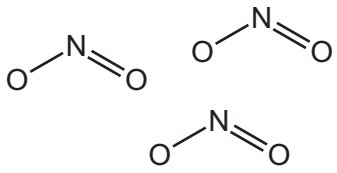

F

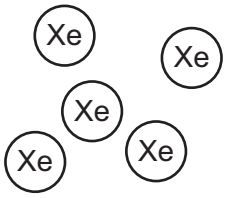

Answer the following questions about these substances.
Each substance may be used once, more than once or not at all.

(a) Which substance, **A**, **B**, **C**, **D**, **E** or **F**,

View solution

(i) is a simple molecular compound, ... [1]

(ii) is an alloy, ... [1]

(iii) is a compound, whose aqueous solution gives a yellow precipitate on addition of aqueous silver nitrate, ... [1]

(iv) is an atmospheric pollutant arising from reactions taking place in car engines, ... [1]

(v) is a diatomic molecule, ... [1]

(vi) conducts electricity when molten but not when solid? ..... [1]

(b) Substance **A** is an element.

View solution

What is meant by the term *element*?

.....

..... [1]

(c) Substance **D** oxidises water to oxygen.

View solution

Complete the symbol equation for this reaction.

$$2F_2 + 2H_2O \rightarrow .....HF + ...$$

[2]

[Total: 9]

2 A student measured the highest temperature reached when four different fuels were burned. He used the apparatus shown below.

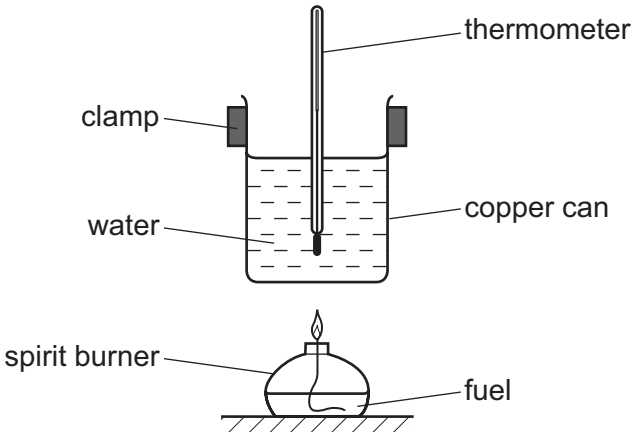

(a) The same amount of each fuel was burned.

View solution

Suggest **two** other things which the student should keep constant to make the experiment a fair test.

1. .....

2. .....

[2]

(b) Is burning an exothermic or an endothermic reaction?
Give a reason for your answer.

View solution

..... [1]

(c) The table below shows the results.

View solution

fuel	molecular formula	initial temperature / °C	final temperature / °C
ethanol	C_2H_6O	23	44
hexane	C_6H_{14}	17	46
pentane	C_5H_{12}	22	48
propanol	C_3H_8O	21	45

(i) Which fuel gave the highest temperature change?

..... [1]

(ii) Which fuel has the highest relative molecular mass?
You are not expected to do any calculations.

View solution

..... [1]

© UCLES 2015

(d) Methane is a fuel.

View solution

(i) Draw the structure of methane showing all atoms and all bonds.

[1]

View solution

(ii) Which **one** of the following fuels is largely methane?
Tick **one** box.

coal	☐
fuel oil	☐
gasoline	☐
natural gas	☐

[1]

View solution

(e) Pentane and hexane belong to the same homologous series.

(i) How can you tell this from their names?

..... [1]

(ii) Complete the following sentence about a homologous series using words from the list below.

View solution

acidic	**alcohol**	**compounds**	**density**	**different**
elements	**functional**	**masses**	**properties**	**solid**

A homologous series is a family of similar ..... with similar .....

due to the presence of the same ..... group.

[3]

[Total: 11]

3 The order of reactivity of zinc, magnesium, calcium and barium is shown below.

zinc → magnesium → calcium → barium

least reactive ⟶ most reactive

View solution

(a) Equal-sized pieces of zinc, magnesium, calcium and barium are placed in water. Some observations from these reactions are shown in the table.

(i) Complete the box for barium.

metal	observations
zinc	no reaction with cold water
magnesium	gives a few bubbles with hot water, does not disappear
calcium	gives off bubbles steadily with cold water, gets smaller slowly
barium	

[2]

(ii) Give the name of a metal in the above table which is extracted by heating with carbon.

..... [1]

(iii) Suggest why barium cannot be extracted using carbon.

..... [1]

View solution

(b) Barium can be extracted by heating barium oxide with aluminium.

$$4BaO + 2Al \rightarrow 3Ba + BaAl_2O_4$$

How does this equation show that barium oxide gets reduced?

..... [1]

View solution

(c) A solution of barium hydroxide is alkaline.

(i) Describe how you would show that barium hydroxide solution is alkaline.

..... [1]

(ii) Complete the word equation for the reaction of barium hydroxide with hydrochloric acid.

View solution

barium hydroxide + hydrochloric acid → ..... + ...

.....

[2]

(d) A student used the apparatus shown below to calculate the concentration of barium hydroxide solution.

View solution

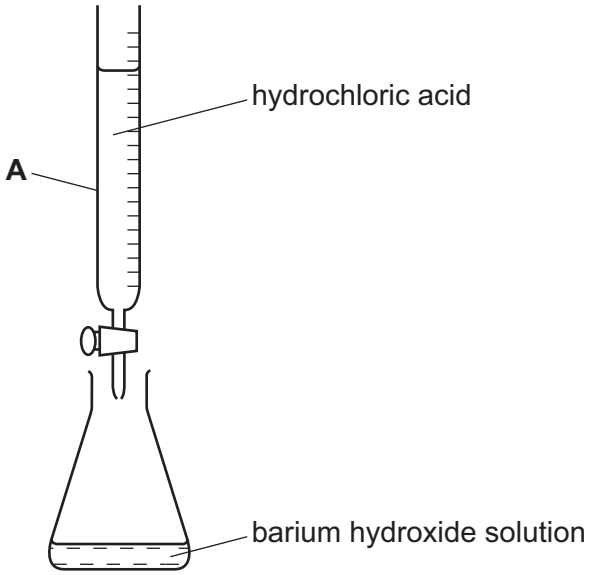

(i) Give the name of the piece of apparatus labelled **A**.

..... [1]

(ii) The hydrochloric acid is added to the barium hydroxide solution in the flask until the acid is in excess.

View solution

Describe how the pH of the solution changes as the acid is added.

.....

..... [2]

(e) Complete the diagram below for the electrolysis of molten zinc chloride.
Label the electrodes and the power source.

View solution

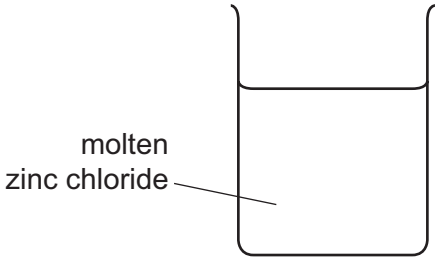

[3]

[Total: 14]

© UCLES 2015

4 A student investigated the reaction of lumps of iron with sulfuric acid.

$$Fe(s) + H_2SO_4(aq) \rightarrow FeSO_4(aq) + H_2(g)$$

She used the apparatus shown below.

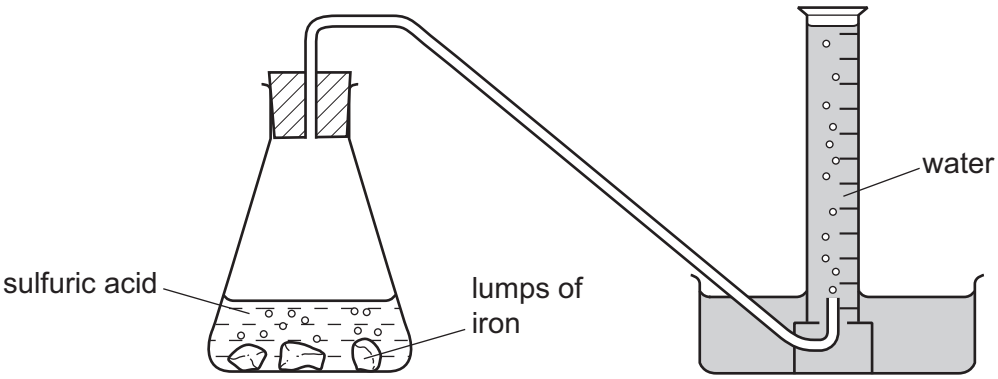

(a) (i) Describe how this apparatus can be used to investigate the rate of this reaction.

View solution

.....

.....

..... [3]

(ii) Describe how the rate of reaction would differ if smaller lumps of iron were used. All other conditions remain the same.

View solution

..... [1]

(b) The student investigated the effect of temperature on the reaction rate.

View solution

(i) State **three** factors which the student should keep the same in each experiment.

1. .....

2. .....

3. .....

[3]

(ii) The table shows how the rate of reaction changed with temperature.

View solution

temperature / °C	rate of reaction in cm^3 / s
20	2.2
30	4.4
40	8.8
50	17.6

Use the information in the table to describe how the rate of reaction changed with temperature.

.....

..... [2]

(c) Iron(II) sulfate can be prepared by adding excess iron to sulfuric acid.

View solution

Describe how you could obtain pure dry crystals of iron(II) sulfate from the reaction mixture in the conical flask.

.....

.....

.....

..... [3]

[Total: 12]

© UCLES 2015

5 A crystal of sulfur melts when heated.

(a) Explain, using the kinetic particle theory, the differences between the arrangement and motion of the particles in sulfur crystals and liquid sulfur.

.....

.....

.....

.....

..... [4]

(b) Sulfur dioxide is an atmospheric pollutant.

View solution

(i) Describe how sulfur dioxide is formed and how it gets into the atmosphere.

.....

.....

..... [2]

(ii) What type of oxide is sulfur dioxide?

View solution

..... [1]

(iii) Flue gas desulfurisation removes sulfur dioxide from exhaust gases in factories.

View solution

Describe the process of flue gas desulfurisation.

.....

..... [2]

(iv) Sulfur dioxide is also formed when copper is reduced by hot concentrated sulfuric acid.

Complete the symbol equation for this reaction.

View solution

$$Cu + ...H_2SO_4 \rightarrow CuSO_4 + SO_2 + ...H_2O$$

[2]

(c) Copper is a metal.

View solution

Give **two** physical properties which are characteristic of all metals.

1. .....

2. .....

[2]

(d) The table below gives some properties of some metals that are used to make electrical cables and wires.

View solution

metal	strength	electrical conductivity	melting point / °C	price $ / kg
aluminium	comparatively weak	good	660	1.5
copper	strong	very good	1093	29
steel	strong	fairly good	1535	2.1
silver	fairly strong	very good	962	635

(i) Suggest why aluminium with a steel core is used for overhead power cables.

.....

..... [2]

(ii) Copper is used in electrical wiring in the home rather than silver.

View solution

Suggest why.

..... [1]

[Total: 16]

6 Geraniol is a chemical found in rose petals.
The structure of geraniol is shown below.

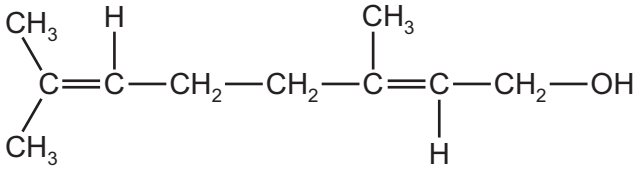

View solution

(a) (i) On the structure above, put a ring around the alcohol functional group. [1]

View solution

(ii) Is geraniol a saturated or an unsaturated compound?
Give a reason for your answer.

..... [1]

(b) Geraniol can be extracted from rose petals by steam distillation using the apparatus shown below. The geraniol is carried off in small droplets with the steam.

View solution

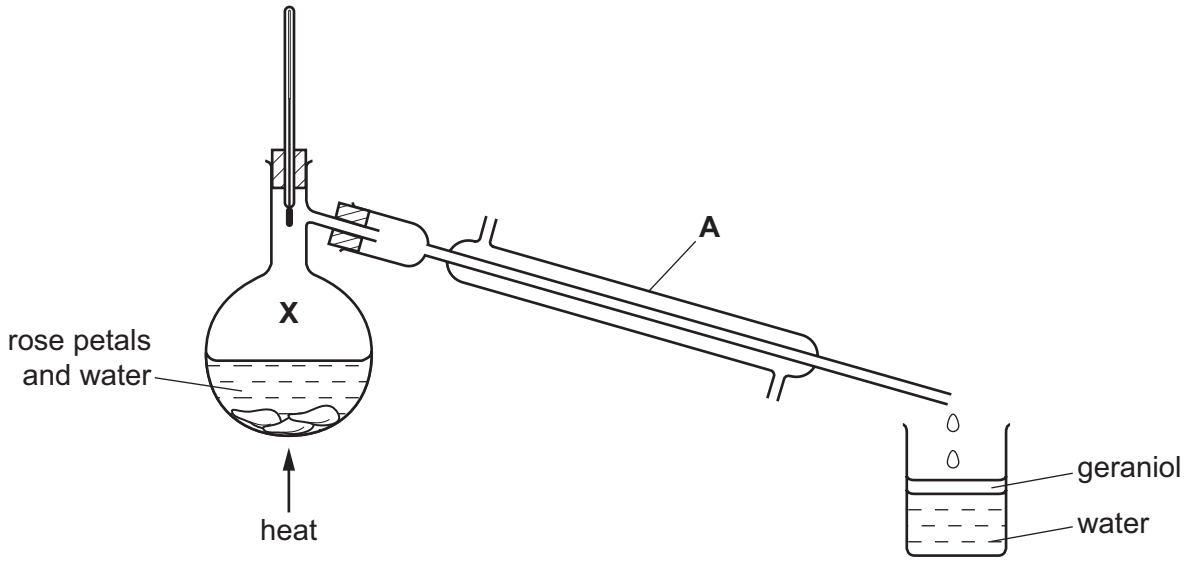

(i) Give the name of the piece of apparatus labelled **A**.

..... [1]

(ii) The vapour at point **X** is a mixture of geraniol and steam.

View solution

Give **one** property of a mixture which distinguishes it from a compound.

.....

..... [1]

(iii) The geraniol and water are collected in the beaker.

View solution

What information in the diagram above shows that geraniol is less dense than water?

..... [1]

(c) Geraniol can also be extracted from rose petals by grinding the petals in ethanol.

View solution

(i) Draw the structure of ethanol showing all atoms and all bonds.

[1]

(ii) Complete the word equation for the complete combustion of ethanol.

View solution

ethanol + oxygen → ..... + ...

[2]

(d) What is the percentage by volume of oxygen in the air?

View solution

..... [1]

[Total: 9]

7 Beryllium is in Group II and Period 2 of the Periodic Table.

View solution

(a) Describe the structure of a beryllium atom.
In your answer, refer to

- the type and number of each subatomic particle present,
- the charges on each type of subatomic particle,
- the position of each type of subatomic particle in the atom.

.....

.....

.....

.....

.....

.....

..... [5]

View solution

(b) Part of the structure of beryllium chloride is shown below.

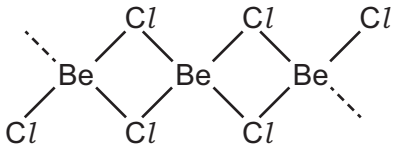

Deduce the simplest formula for beryllium chloride.

..... [1]

View solution

(c) Beryllium carbide, Be_2C, reacts with water. Beryllium hydroxide and methane are formed.

$$Be_2C + 4H_2O \rightarrow 2Be(OH)_2 + CH_4$$

(i) Calculate the relative formula mass of beryllium hydroxide.

[2]

(ii) Describe **one** adverse effect of methane on the environment.

..... [1]

[Total: 9]

BLANK PAGE

View solution

© UCLES 2015

BLANK PAGE

DATA SHEET
The Periodic Table of the Elements

Group																		
I	II										III	IV	V	VI	VII	0
																4 **He** Helium 2
					1 **H** Hydrogen 1											
7 **Li** Lithium 3	9 **Be** Beryllium 4										11 **B** Boron 5	12 **C** Carbon 6	14 **N** Nitrogen 7	16 **O** Oxygen 8	19 **F** Fluorine 9	20 **Ne** Neon 10
23 **Na** Sodium 11	24 **Mg** Magnesium 12										27 **Al** Aluminium 13	28 **Si** Silicon 14	31 **P** Phosphorus 15	32 **S** Sulfur 16	35.5 **Cl** Chlorine 17	40 **Ar** Argon 18
39 **K** Potassium 19	40 **Ca** Calcium 20	45 **Sc** Scandium 21	48 **Ti** Titanium 22	51 **V** Vanadium 23	52 **Cr** Chromium 24	55 **Mn** Manganese 25	56 **Fe** Iron 26	59 **Co** Cobalt 27	59 **Ni** Nickel 28	64 **Cu** Copper 29	65 **Zn** Zinc 30	70 **Ga** Gallium 31	73 **Ge** Germanium 32	75 **As** Arsenic 33	79 **Se** Selenium 34	80 **Br** Bromine 35	84 **Kr** Krypton 36
85 **Rb** Rubidium 37	88 **Sr** Strontium 38	89 **Y** Yttrium 39	91 **Zr** Zirconium 40	93 **Nb** Niobium 41	96 **Mo** Molybdenum 42	**Tc** Technetium 43	101 **Ru** Ruthenium 44	103 **Rh** Rhodium 45	106 **Pd** Palladium 46	108 **Ag** Silver 47	112 **Cd** Cadmium 48	115 **In** Indium 49	119 **Sn** Tin 50	122 **Sb** Antimony 51	128 **Te** Tellurium 52	127 **I** Iodine 53	131 **Xe** Xenon 54
133 **Cs** Caesium 55	137 **Ba** Barium 56	139 **La** Lanthanum 57 *	178 **Hf** Hafnium 72	181 **Ta** Tantalum 73	184 **W** Tungsten 74	186 **Re** Rhenium 75	190 **Os** Osmium 76	192 **Ir** Iridium 77	195 **Pt** Platinum 78	197 **Au** Gold 79	201 **Hg** Mercury 80	204 **Tl** Thallium 81	207 **Pb** Lead 82	209 **Bi** Bismuth 83	**Po** Polonium 84	**At** Astatine 85	**Rn** Radon 86
Fr Francium 87	226 **Ra** Radium 88	227 **Ac** Actinium 89 †															

140 **Ce** Cerium 58	141 **Pr** Praseodymium 59	144 **Nd** Neodymium 60	**Pm** Promethium 61	150 **Sm** Samarium 62	152 **Eu** Europium 63	157 **Gd** Gadolinium 64	159 **Tb** Terbium 65	162 **Dy** Dysprosium 66	165 **Ho** Holmium 67	167 **Er** Erbium 68	169 **Tm** Thulium 69	173 **Yb** Ytterbium 70	175 **Lu** Lutetium 71
232 **Th** Thorium 90	**Pa** Protactinium 91	238 **U** Uranium 92	**Np** Neptunium 93	**Pu** Plutonium 94	**Am** Americium 95	**Cm** Curium 96	**Bk** Berkelium 97	**Cf** Californium 98	**Es** Einsteinium 99	**Fm** Fermium 100	**Md** Mendelevium 101	**No** Nobelium 102	**Lr** Lawrencium 103

*58-71 Lanthanoid series
†90-103 Actinoid series

Key

a
X
b

a = relative atomic mass
X = atomic symbol
b = proton (atomic) number

The volume of one mole of any gas is 24 dm^3 at room temperature and pressure (r.t.p.).

To avoid the issue of disclosure of answer-related information to candidates, all copyright acknowledgements are reproduced online in the Cambridge International Examinations Copyright Acknowledgements Booklet. This is produced for each series of examinations and is freely available to download at www.cie.org.uk after the live examination series.