Cambridge Assessment International Education

Cambridge IGCSE™

CANDIDATE NAME									
CENTRE NUMBER						CANDIDATE NUMBER			

CHEMISTRY **0620/63**

Paper 6 Alternative to Practical **October/November 2020**

1 hour

You must answer on the question paper.

No additional materials are needed.

INSTRUCTIONS

- Answer **all** questions.
- Use a black or dark blue pen. You may use an HB pencil for any diagrams or graphs.
- Write your name, centre number and candidate number in the boxes at the top of the page.
- Write your answer to each question in the space provided.
- Do **not** use an erasable pen or correction fluid.
- Do **not** write on any bar codes.
- You may use a calculator.
- You should show all your working and use appropriate units.

INFORMATION

- The total mark for this paper is 40.
- The number of marks for each question or part question is shown in brackets [ ].

This document has **12** pages. Blank pages are indicated.

IB20 11_0620_63/2RP
© UCLES 2020

1 Hot zinc reacts with steam to make zinc oxide and hydrogen gas.

A student wanted to use the apparatus shown to react zinc with steam and to collect the hydrogen.

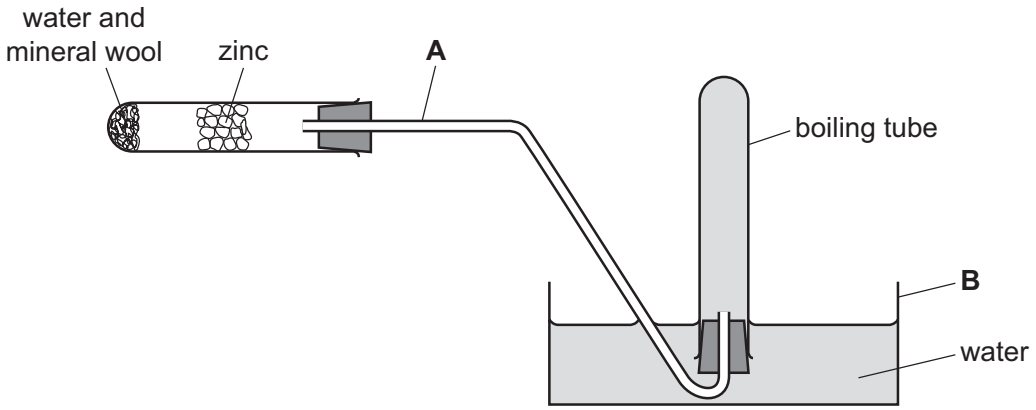

View solution

(a) Name the items of apparatus labelled **A** and **B**.

A .....

B .....

[2]

View solution

(b) State the purpose of the mineral wool.

.....

..... [1]

View solution

(c) The apparatus shown is dangerous to use because of an error in the way it has been set up.

Identify this error.

Explain why this error makes it dangerous to use the apparatus.

error .....

.....

explanation .....

.....

[2]

(d) Add **two** arrows to the diagram to show the two places where the apparatus should be heated once the error in **(c)** has been corrected. [1]

View solution

(e) Describe the test for hydrogen gas.

View solution

test .....

result .....

[2]

[Total: 8]

2 A student investigated the reaction between dilute ethanoic acid and two different solutions of sodium hydroxide labelled solution **A** and solution **B**.

Two experiments were done.

View solution

(a) *Experiment 1*

- A burette was rinsed with solution **A**.
- The burette was filled with solution **A**. Some of solution **A** was run out of the burette so that the level of solution **A** was on the burette scale.
- Using a measuring cylinder, 25 cm^3 of dilute ethanoic acid was poured into a conical flask.
- Five drops of thymolphthalein indicator were added to the conical flask.
- Solution **A** was added slowly from the burette to the conical flask, while the flask was swirled, until the solution just changed colour.

Use the burette diagrams to complete the table for Experiment 1.



initial reading

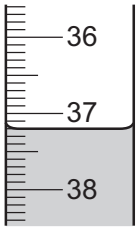

final reading

	Experiment 1
final burette reading / cm^3	
initial burette reading / cm^3	
volume of solution **A** added / cm^3	

Experiment 2

- The conical flask was emptied and rinsed with distilled water.
- The burette was emptied and rinsed with distilled water.
- The burette was rinsed with solution **B**.
- The burette was filled with solution **B**. Some of solution **B** was run out of the burette so that the level of solution **B** was on the burette scale.
- Using a measuring cylinder, 25 cm^3 of dilute ethanoic acid was poured into a conical flask.
- Five drops of thymolphthalein indicator were added to the conical flask.
- Solution **B** was added slowly from the burette to the conical flask, while the flask was swirled, until the solution just changed colour.

Use the burette diagrams to complete the table for Experiment 2.

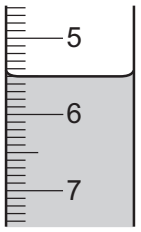

initial reading

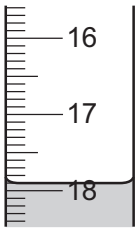

final reading

	Experiment 2
final burette reading / cm^3	
initial burette reading / cm^3	
volume of solution **B** added / cm^3	

[4]

(b) Explain why universal indicator is **not** a suitable indicator to use in this titration.

View solution

.....

..... [1]

(c) (i) State which solution of sodium hydroxide, solution **A** or solution **B**, was the more concentrated.
Explain your answer.

View solution

.....

..... [1]

(ii) State how many times more concentrated this solution of sodium hydroxide was than the other solution of sodium hydroxide.

View solution

.....

..... [1]

© UCLES 2020

(d) Determine the volume of solution **B** that would be required if Experiment 2 was repeated with 10 cm^3 of dilute ethanoic acid.

View solution

.....

..... [2]

(e) Describe how the reliability of the results could be checked.

View solution

.....

..... [1]

(f) A 25 cm^3 pipette can be used to measure the volume of a solution.

View solution

(i) Describe an advantage of using a 25 cm^3 pipette to measure the volume of the dilute ethanoic acid.

.....

..... [1]

(ii) Explain why a 25 cm^3 pipette could **not** be used to measure the volume of solution **A**.

View solution

.....

..... [1]

(g) (i) Explain why the burette was rinsed with distilled water in Experiment 2.

View solution

.....

..... [1]

(ii) Explain why the burette was then rinsed with solution **B**.

View solution

.....

..... [1]

(iii) State the effect that **not** rinsing the burette with solution **B** would have on the final burette reading.
Explain your answer.

View solution

effect .....

explanation .....

.....
[2]

[Total: 16]

© UCLES 2020

3 Two solids, solid **C** and solid **D**, were analysed.
Tests were done on each solid.

tests on solid C

Tests were done and the following observations were made.

tests on solid **C**	observations
test 1 Half of solid **C** was placed in a test-tube. The solid was heated gently and then strongly.	steam was given off and condensation appeared at the mouth of the test-tube, the remaining solid became black
The remaining solid **C** was dissolved in distilled water to produce solution **C**. The solution was divided into two equal portions in two test-tubes. **test 2** A few drops of universal indicator solution were added to the first portion of solution **C**.	the solution became orange
test 3 A spatula measure of solid sodium carbonate was added to the second portion of solution **C**. Any gas produced was tested.	effervescence was seen, the gas turned limewater milky

(a) Suggest the pH of solution **C**.

View solution

pH = ... [1]

(b) Identify the gas produced in **test 3**.

View solution

..... [1]

(c) What conclusions can you make about solid **C**?

View solution

.....

..... [2]

© UCLES 2020

tests on solid D

Solid **D** was calcium chloride.

Complete the expected observations.

Solid **D** was dissolved in water to form solution **D**. Solution **D** was divided into four approximately equal portions in four test-tubes.

(d) (i) A few drops of aqueous sodium hydroxide were added to the first portion of solution **D**.

observations ..... [1]

(ii) An excess of aqueous sodium hydroxide was added to the mixture from **(d)(i)**.

observations ..... [1]

(e) Aqueous ammonia was added dropwise and then in excess to the second portion of solution **D**.

observations .....

..... [2]

(f) About 1 cm^3 of dilute nitric acid and a few drops of aqueous silver nitrate were added to the third portion of solution **D**.

observations ..... [1]

(g) About 1 cm^3 of dilute nitric acid and a few drops of aqueous barium nitrate were added to the fourth portion of solution **D**.

observations ..... [1]

[Total: 10]

© UCLES 2020

4 A toothpaste contains:

- sodium fluoride
- calcium carbonate
- silica
- mint flavouring.

View solution

Sodium fluoride and the mint flavouring are soluble in water.
Calcium carbonate and silica are insoluble in water.
Calcium carbonate reacts with dilute hydrochloric acid to form the soluble salt calcium chloride.

Plan an investigation to find the percentage by mass of silica in the toothpaste.

In your answer you should include how you will calculate the percentage by mass of silica in the toothpaste.

You have access to normal laboratory apparatus.

.....

.....

.....

.....

.....

.....

.....

.....

.....

.....

.....

.....

..... [6]

© UCLES 2020

BLANK PAGE

© UCLES 2020

BLANK PAGE

© UCLES 2020

BLANK PAGE

Permission to reproduce items where third-party owned material protected by copyright is included has been sought and cleared where possible. Every reasonable effort has been made by the publisher (UCLES) to trace copyright holders, but if any items requiring clearance have unwittingly been included, the publisher will be pleased to make amends at the earliest possible opportunity.

To avoid the issue of disclosure of answer-related information to candidates, all copyright acknowledgements are reproduced online in the Cambridge Assessment International Education Copyright Acknowledgements Booklet. This is produced for each series of examinations and is freely available to download at www.cambridgeinternational.org after the live examination series.

Cambridge Assessment International Education is part of the Cambridge Assessment Group. Cambridge Assessment is the brand name of the University of Cambridge Local Examinations Syndicate (UCLES), which itself is a department of the University of Cambridge.