Cambridge International Examinations
Cambridge International General Certificate of Secondary Education

PHYSICS **0625/12**

Paper 1 Multiple Choice **May/June 2015**

45 minutes

Additional Materials: Multiple Choice Answer Sheet
Soft clean eraser
Soft pencil (type B or HB recommended)

READ THESE INSTRUCTIONS FIRST

Write in soft pencil.
Do not use staples, paper clips, glue or correction fluid.
Write your name, Centre number and candidate number on the Answer Sheet in the spaces provided unless this has been done for you.
DO **NOT** WRITE IN ANY BARCODES.

There are **forty** questions on this paper. Answer **all** questions. For each question there are four possible answers **A**, **B**, **C** and **D**.
Choose the **one** you consider correct and record your choice in **soft pencil** on the separate Answer Sheet.

Read the instructions on the Answer Sheet very carefully.

Each correct answer will score one mark. A mark will not be deducted for a wrong answer.
Any rough working should be done in this booklet.
Electronic calculators may be used.

The syllabus is approved for use in England, Wales and Northern Ireland as a Cambridge International Level 1/Level 2 Certificate.

© UCLES 2015

CAMBRIDGE International Examinations

1 The diagram shows four identical spheres placed between two wooden blocks on a ruler.

View solution

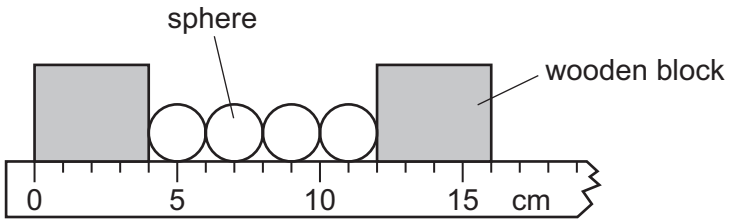

What is the diameter of one sphere?

A 1.0 cm **B** 2.0 cm **C** 3.0 cm **D** 4.0 cm

2 What does the area under a speed-time graph represent?

View solution

A acceleration

B average speed

C deceleration

D distance travelled

3 A car travels 100 km. The journey takes two hours. The highest speed of the car is 80 km / h, and the lowest speed is 40 km / h.

View solution

What is the average speed for the journey?

A 40 km / h **B** 50 km / h **C** 60 km / h **D** 120 km / h

4 The diagram shows a uniform beam being used as a balance. The beam is pivoted at its centre.

A 1.0 N weight is attached to one end of the beam. An empty pan weighing 0.2 N is attached to the other end of the beam.

View solution

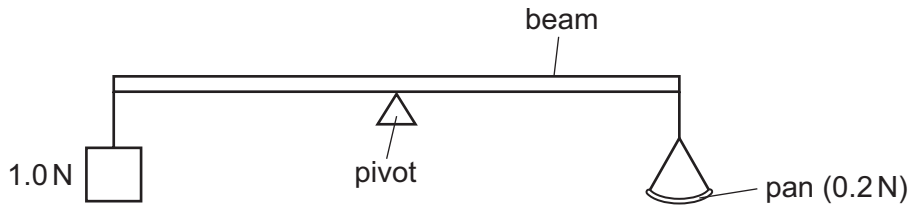

How many 0.1 N weights must be placed on the pan in order to balance the beam?

A 5 **B** 8 **C** 10 **D** 12

© UCLES 2015

5 A metal block has the dimensions shown. Its mass is 1000 g.

View solution

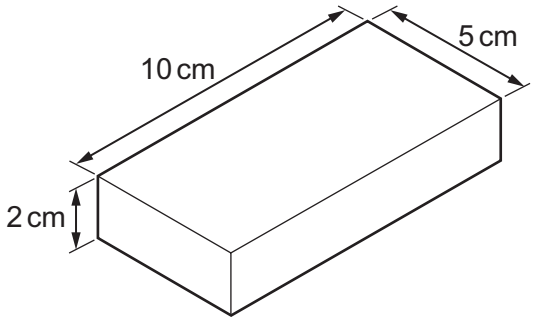

What is the density of the metal?

A $\left(\frac{5 \times 10}{1000 \times 2}\right) \text{g/cm}^3$

B $\left(\frac{2 \times 5 \times 10}{1000}\right) \text{g/cm}^3$

C $\left(\frac{1000 \times 2}{5 \times 10}\right) \text{g/cm}^3$

D $\left(\frac{1000}{2 \times 5 \times 10}\right) \text{g/cm}^3$

6 The diagrams show four identical objects. Each object is acted on by only the three forces shown.

Which object accelerates to the right, with the **smallest** acceleration?

View solution

A



B



C



D

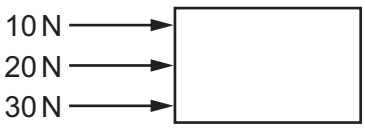

© UCLES 2015

7 Different weights are hung from a spring. The diagram shows the original length of the spring, and the lengths when different weights are added.

View solution

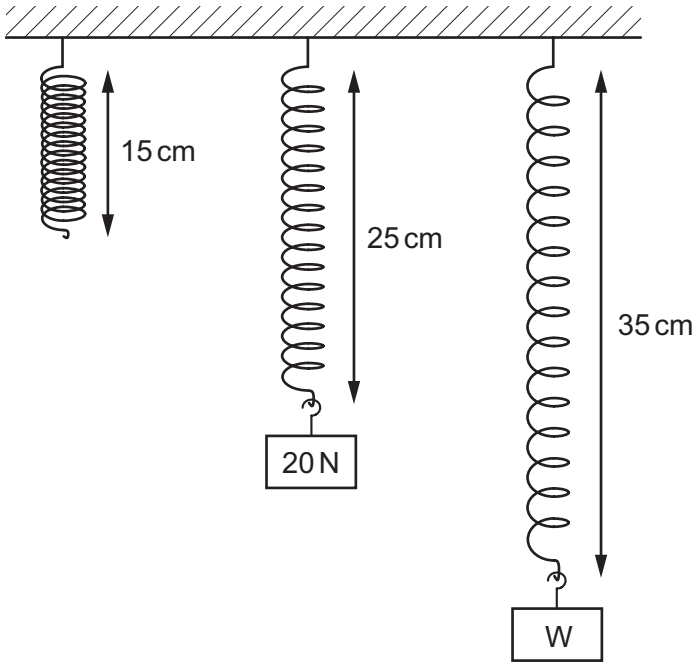

The extension of the spring is directly proportional to the weight hung from it.

What is the weight of W?

A 30 N **B** 35 N **C** 40 N **D** 45 N

8 Which source of energy involves the splitting of heavy atoms?

View solution

A chemical energy

B geothermal energy

C hydroelectric energy

D nuclear energy

© UCLES 2015

9 A cyclist travels down a hill from rest at point X, without pedalling.

View solution

The cyclist applies his brakes and the cycle stops at point Y.

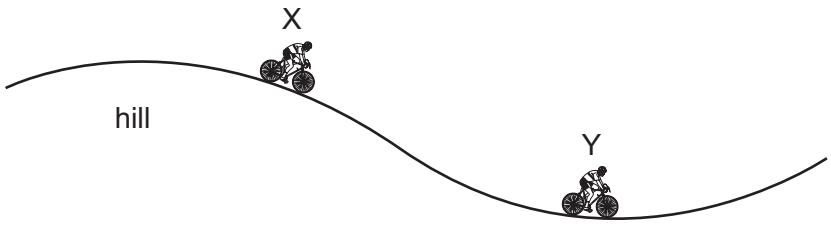

Which energy changes have taken place between X and Y?

A gravitational potential → kinetic → thermal (heat)

B gravitational potential → thermal (heat) → kinetic

C kinetic → gravitational potential → thermal (heat)

D kinetic → thermal (heat) → gravitational potential

10 The diagram shows a stone suspended under the surface of a liquid from a string. The stone experiences a pressure caused by the liquid.

View solution

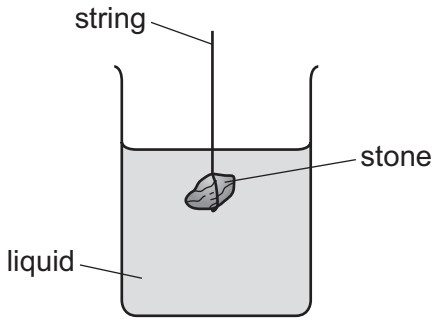

What would increase the pressure on the stone?

A decreasing the surface area of the stone

B increasing the mass of the stone

C lowering the stone deeper into the liquid

D using a liquid with a lower density

© UCLES 2015

11 The diagram shows a simple mercury barometer, used to measure atmospheric pressure.

View solution

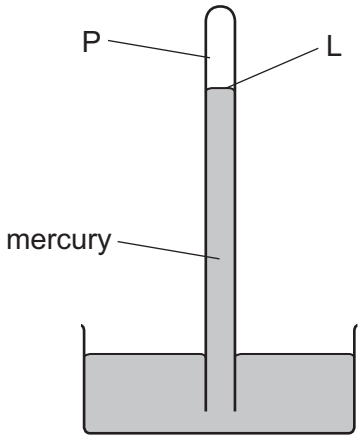

Atmospheric pressure decreases.

Which row states what happens to the pressure at point P and what happens to the level L?

	pressure at P	level L
A	decreases	falls
B	decreases	rises
C	stays the same	falls
D	stays the same	rises

12 Puddles of rain water remain after a storm. The water in the puddles gradually evaporates.

View solution

How does the evaporation affect the temperature of the water remaining in the puddle, and how does it affect the average speed of the remaining water molecules in the puddle?

	temperature of water in puddle	average speed of water molecules in puddle
A	decreases	decreases
B	decreases	increases
C	increases	decreases
D	increases	increases

© UCLES 2015

13 The diagram represents moving gas molecules in a sealed container of fixed volume.

View solution

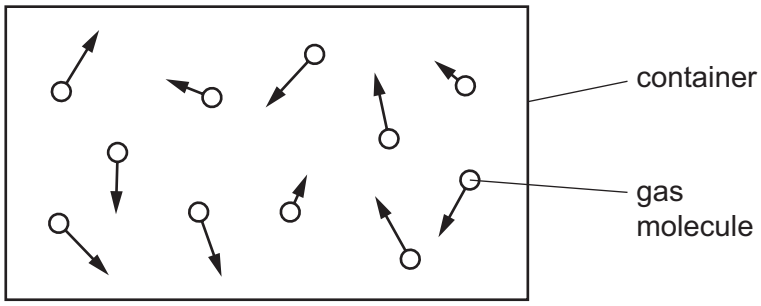

The temperature of the gas is now increased.

What happens to the pressure of the gas, and what happens to the speed of the gas molecules?

	pressure of gas	speed of molecules
A	increases	increases
B	increases	unchanged
C	unchanged	increases
D	unchanged	unchanged

14 The thermometer in the diagram has no scale.

View solution

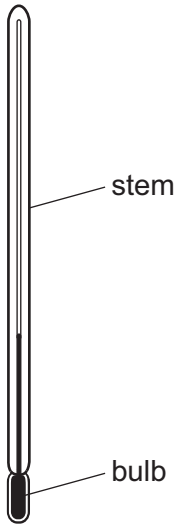

Where must the bulb be placed so that 0 °C can be marked on the stem?

A in a freezer

B in pure boiling water

C in pure cold water

D in pure melting ice

© UCLES 2015

15 Two metal blocks X and Y are at room temperature. Each block is heated so that its temperature rises by 10 °C.

View solution

The blocks are now allowed to cool back to room temperature.

Block Y has a greater thermal capacity than block X.

Which block needs more thermal (heat) energy to heat it up by 10 °C and which block loses more thermal (heat) energy as it cools back to room temperature?

	more energy	
	heating	cooling
A	X	X
B	X	Y
C	Y	X
D	Y	Y

16 The diagram shows a vacuum flask used to keep liquid hot.

View solution

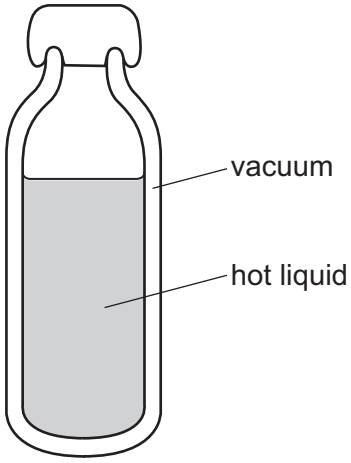

How does thermal energy pass through the vacuum?

A conduction only

B convection only

C radiation

D conduction and convection

17 A cupboard is placed in front of a heater. Air can move through a gap under the cupboard.

View solution

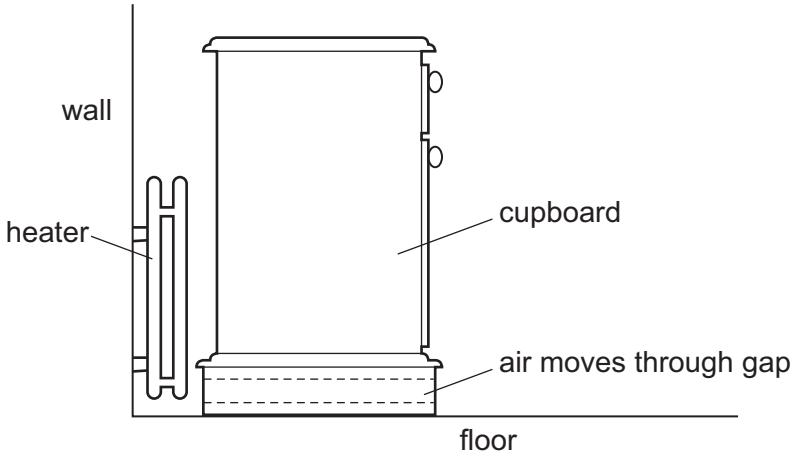

Which row describes the temperature, and the direction of movement, of the air in the gap?

	air temperature	air direction
A	cool	away from the heater
B	cool	towards the heater
C	warm	away from the heater
D	warm	towards the heater

© UCLES 2015

18 The diagrams show two water waves P and Q that are travelling at the same speed on the surface of a pond. The diagrams are to the same scale.

View solution

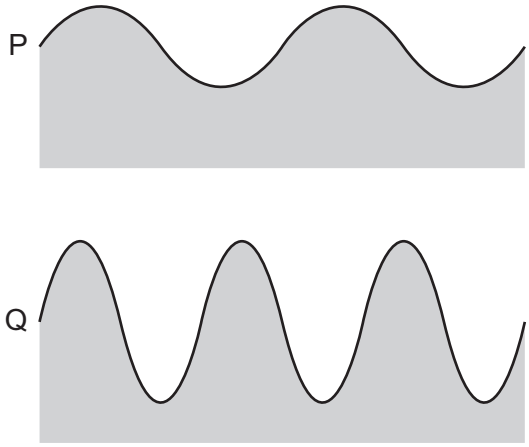

Which wave has the greater amplitude and which wave has the greater frequency?

	greater amplitude	greater frequency
A	P	P
B	P	Q
C	Q	P
D	Q	Q

19 The diagrams represent water waves in a tank.

View solution

Which diagram represents a wave that changes speed?

A

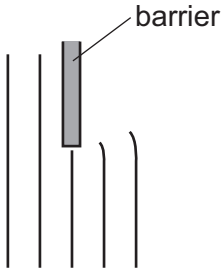

B

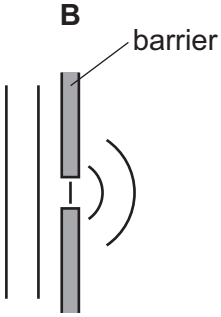

C

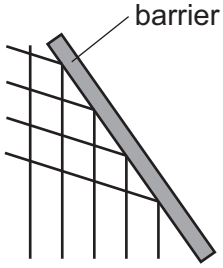

D

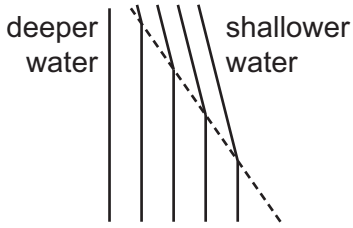

20 An object is placed in front of a thin converging lens.

View solution

The diagram shows the paths of two rays from the top of the object.

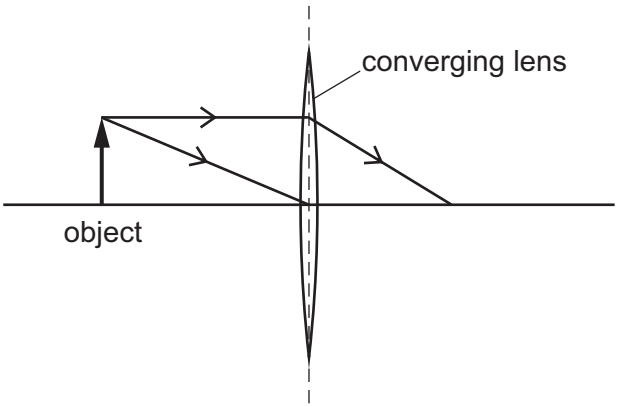

An image of the object is formed on a screen to the right of the lens.

How does this image compare with the object?

A It is larger and inverted.

B It is larger and the same way up.

C It is smaller and inverted.

D It is smaller and the same way up.

21 Radiation from the Sun is dispersed by a prism. The prism does not absorb any of the radiation. Four identical thermometers are placed, one at each of the labelled positions.

View solution

In which position does the thermometer show the greatest rise in temperature?

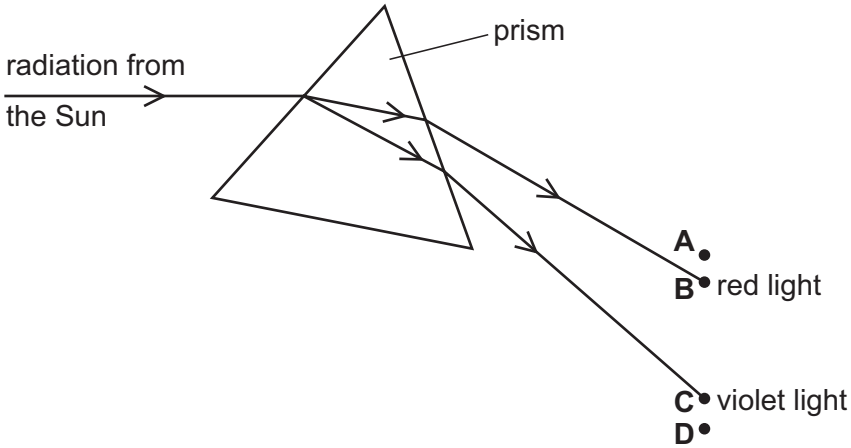

22 A scientist tries to direct a ray of light in a glass block so that no light escapes from the top of the block.

However, some light does escape.

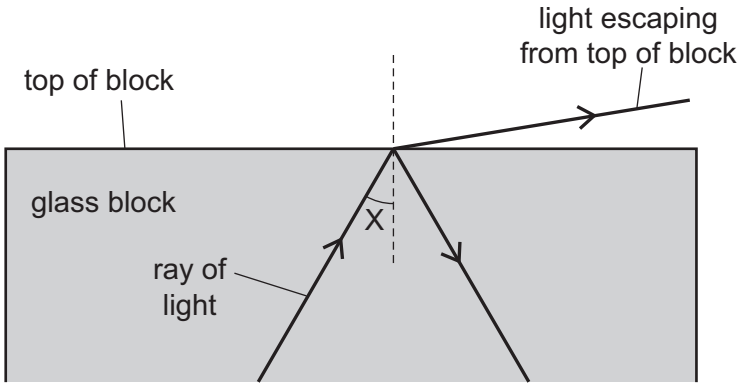

The scientist changes angle X and stops the light escaping from the top.

Which row in the table describes the change to angle X and the name of the effect produced?

	change to angle X	name of effect produced
A	decrease	total internal reflection
B	decrease	total internal refraction
C	increase	total internal reflection
D	increase	total internal refraction

23 A quiet sound is produced by a loudspeaker. The loudness of the sound is increased.

Which property of the sound wave is increased?

A amplitude

B frequency

C speed

D wavelength

24 A man holding a starting pistol stands 640 m away from a spectator.

View solution

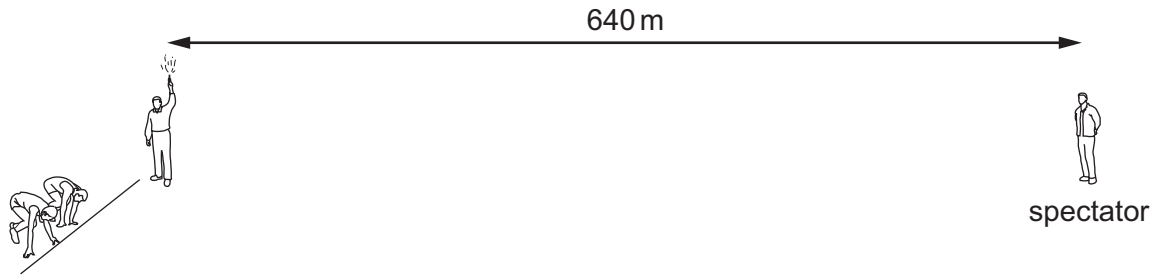

The spectator hears the sound of the starting pistol 2.0 s after seeing the flash from the pistol.

Using this information, what is the speed of sound in air?

A 160 m / s **B** 320 m / s **C** 640 m / s **D** 1280 m / s

View solution

25 Which group contains only non-ferrous metals?

A aluminium, brass, iron

B brass, copper, lead

C copper, iron, steel

D copper, lead, steel

26 An electromagnet with a soft-iron core is connected to a battery and an open switch. The soft-iron core is just above some small soft-iron nails.

View solution

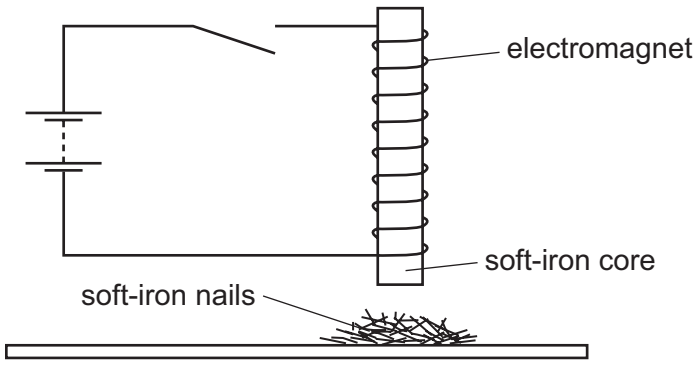

The switch is now closed, left closed for a few seconds, and then opened.

What do the soft-iron nails do as the switch is closed, and what do they do when the switch is then opened?

	as switch is closed	as switch is opened
A	nails jump up	nails fall down
B	nails jump up	nails stay up
C	nails stay down	nails jump up
D	nails stay down	nails stay down

© UCLES 2015

27 A student has wires of different lengths and different diameters. The wires are all made of the same metal.

View solution

The student measures the resistance of one wire.

Which wire has a greater resistance than the wire he has measured?

A a shorter wire with a larger diameter

B a shorter wire with the same diameter

C a wire of the same length with a larger diameter

D a wire of the same length with a smaller diameter

28 The circuit diagram shows a 4.0 Ω resistor and an 8.0 Ω resistor connected to a 6.0 V battery.

View solution

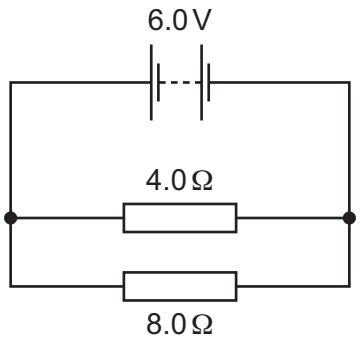

What is the potential difference (p.d.) across the 4.0 Ω resistor?

A 0.5 V **B** 2.0 V **C** 4.0 V **D** 6.0 V

© UCLES 2015

29 Diagram 1 shows two thin, uncharged strips of plastic.

View solution

Diagram 2 shows the same strips after they have been rubbed with a dry cloth.

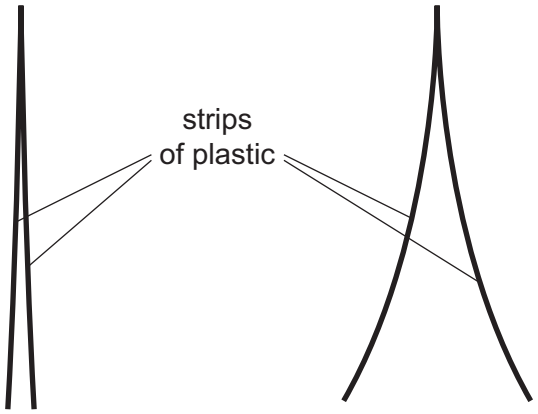

diagram 1 diagram 2

Which row describes the charge on the strips after rubbing, and the force between the strips after rubbing?

	charge on strips	force between strips
A	opposite	attraction
B	opposite	repulsion
C	the same	attraction
D	the same	repulsion

© UCLES 2015

30 The diagram shows a circuit which includes an uncharged capacitor and a switch.

View solution

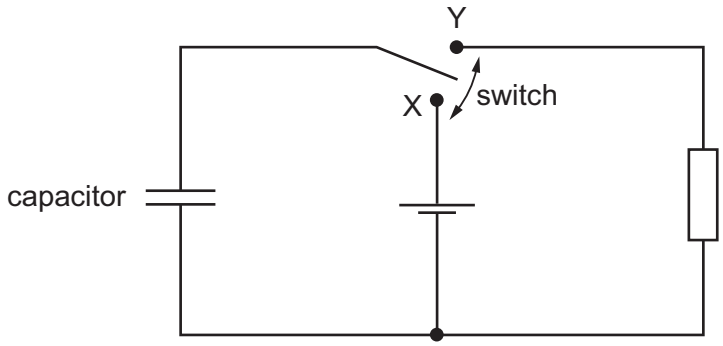

The switch can be moved between position X and position Y.

What happens to the capacitor when the switch is moved to position X, and what happens when the switch is then moved to position Y?

	switch at X	switch at Y
A	capacitor charges	capacitor charges
B	capacitor charges	capacitor discharges
C	capacitor discharges	capacitor charges
D	capacitor discharges	capacitor discharges

31 Two 5.0 Ω resistors are connected as shown in the diagram.

View solution

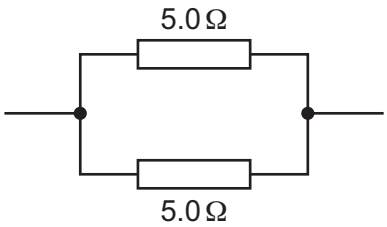

What is the total resistance of this combination?

A less than 5.0 Ω

B 5.0 Ω

C more than 5.0 Ω but less than 10.0 Ω

D 10.0 Ω

© UCLES 2015

32 The diagram shows a 10 Ω resistor and a 20 Ω resistor connected in a potential divider circuit.

View solution

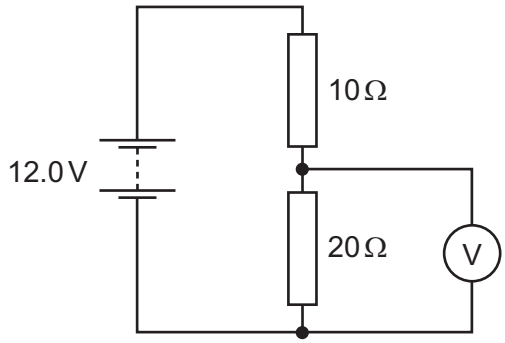

What is the reading on the voltmeter?

A 4.0 V **B** 6.0 V **C** 8.0 V **D** 12.0 V

33 In the circuit shown, only one of the fuses has blown, but none of the lamps is lit.

View solution

Which fuse has blown?

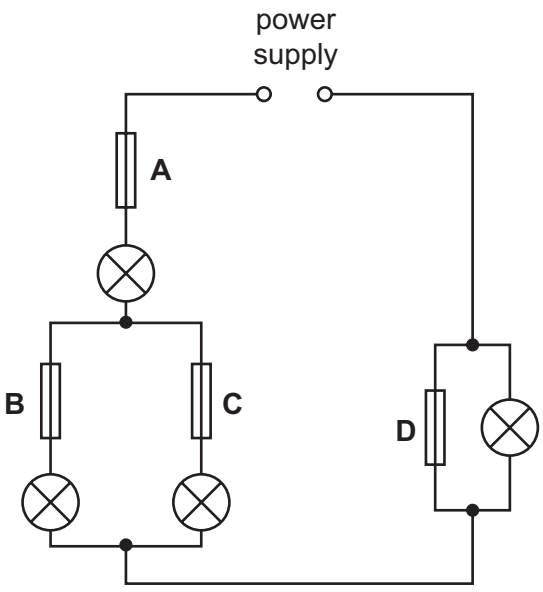

34 An e.m.f. is induced across a wire when it moves through the magnetic field between the poles of a magnet.

View solution

Which electrical device operates because of this effect?

A a battery

B a cathode-ray tube

C a generator

D a motor

View solution

35 The diagram shows a flat, rectangular coil placed between the poles of a magnet.

There is a current in the coil that makes it turn in the direction shown in the diagram.

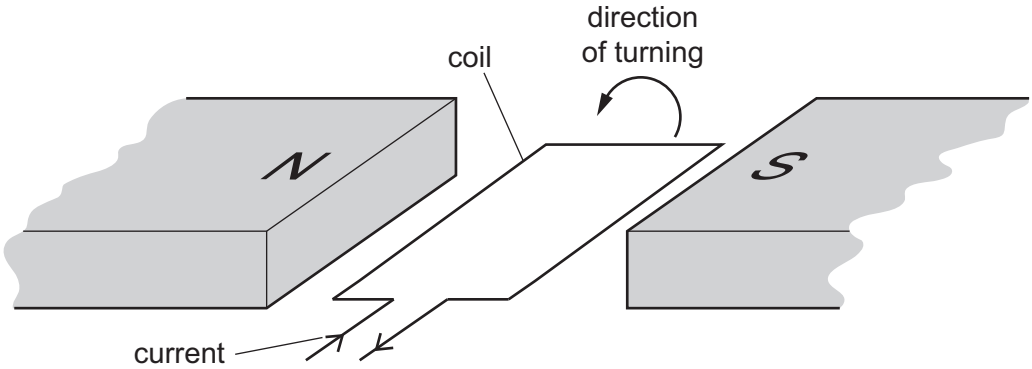

Which change would make the coil turn in the opposite direction?

A decreasing the current in the coil

B increasing the number of turns on the coil

C reversing both the direction of the current in the coil and the poles of the magnet

D reversing only the direction of the current in the coil

36 A transformer has 1000 turns on its primary coil. An input voltage of 12 V is applied to the primary coil, and an output voltage of 120 V is induced across the secondary coil.

View solution

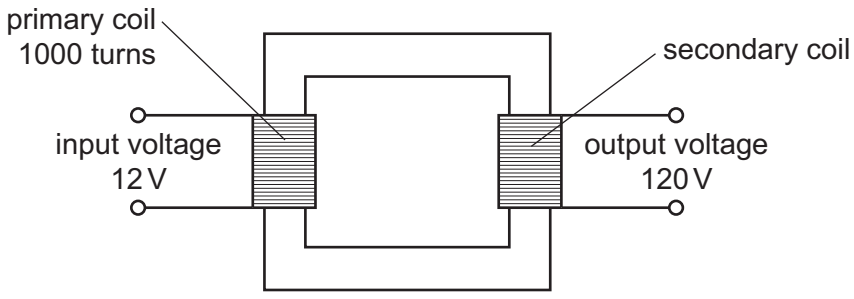

How many turns are on the secondary coil of the transformer?

A 100 **B** 120 **C** 1000 **D** 10 000

© UCLES 2015

37 The diagram shows a cathode-ray tube.

View solution

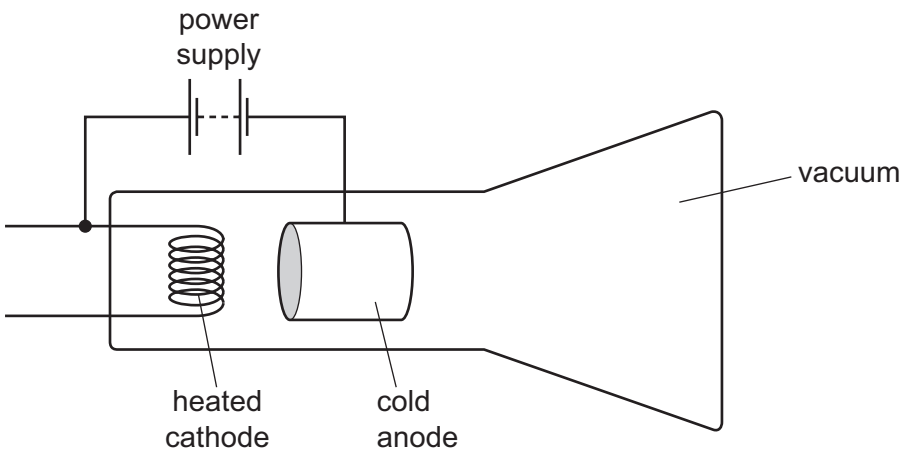

The tube is not working properly.

Which change should be made so that the tube works properly to produce a continuous beam of cathode rays?

A Heat the anode instead of the cathode.

B Reverse the connections of the power supply.

C Use an a.c. power supply instead of a d.c. power supply.

D Use air in the tube instead of a vacuum.

View solution

38 Which statement about α-radiation is correct?

A It is a stream of fast-moving electrons.

B It is a form of electromagnetic radiation.

C It is more highly ionising than γ-radiation.

D It is more penetrating than β-radiation.

View solution

39 A radioactive source produces a count rate on a detector of 1600 counts / s.

After 32 hours the count rate has fallen to 100 counts / s.

Both count rates have been corrected for background radiation.

What is the half-life of the source?

A 2.0 hours **B** 6.4 hours **C** 8.0 hours **D** 16 hours

View solution

40 A nuclide has the symbol $^{22}_{10}\text{Ne}$.

What is the proton number of a nucleus of this nuclide?

A 10 **B** 12 **C** 22 **D** 32

View solution

© UCLES 2015

BLANK PAGE

Permission to reproduce items where third-party owned material protected by copyright is included has been sought and cleared where possible. Every reasonable effort has been made by the publisher (UCLES) to trace copyright holders, but if any items requiring clearance have unwittingly been included, the publisher will be pleased to make amends at the earliest possible opportunity.

To avoid the issue of disclosure of answer-related information to candidates, all copyright acknowledgements are reproduced online in the Cambridge International Examinations Copyright Acknowledgements Booklet. This is produced for each series of examinations and is freely available to download at www.cie.org.uk after the live examination series.

Cambridge International Examinations is part of the Cambridge Assessment Group. Cambridge Assessment is the brand name of University of Cambridge Local Examinations Syndicate (UCLES), which is itself a department of the University of Cambridge.