Cambridge International Examinations
Cambridge International General Certificate of Secondary Education

PHYSICS **0625/13**

Paper 1 Multiple Choice **May/June 2015**

45 minutes

Additional Materials: Multiple Choice Answer Sheet
Soft clean eraser
Soft pencil (type B or HB recommended)

READ THESE INSTRUCTIONS FIRST

Write in soft pencil.
Do not use staples, paper clips, glue or correction fluid.
Write your name, Centre number and candidate number on the Answer Sheet in the spaces provided unless this has been done for you.
DO **NOT** WRITE IN ANY BARCODES.

There are **forty** questions on this paper. Answer **all** questions. For each question there are four possible answers **A**, **B**, **C** and **D**.
Choose the **one** you consider correct and record your choice in **soft pencil** on the separate Answer Sheet.

Read the instructions on the Answer Sheet very carefully.

Each correct answer will score one mark. A mark will not be deducted for a wrong answer.
Any rough working should be done in this booklet.
Electronic calculators may be used.

The syllabus is approved for use in England, Wales and Northern Ireland as a Cambridge International Level 1/Level 2 Certificate.

© UCLES 2015

CAMBRIDGE International Examinations

1 A cook wants to prepare some food to be cooked by 1.15 p.m. He uses an oven with an automatic timer that can be set to switch on and off at certain times. The oven needs to be switched on for 2 hours 10 minutes.

View solution

At which time does the oven need to switch on?

A 11.05 a.m. **B** 11.25 a.m. **C** 3.05 p.m. **D** 3.25 p.m.

View solution

2 The speed-time graph shows the motion of a car.

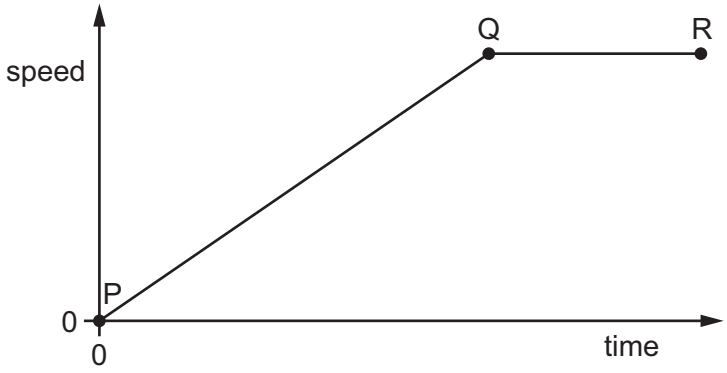

Which row describes the motion?

	between P and Q	between Q and R
A	accelerating	moving at constant speed
B	accelerating	not moving
C	moving at constant speed	decelerating
D	moving at constant speed	not moving

3 A car travels 100 km. The journey takes two hours. The highest speed of the car is 80 km / h, and the lowest speed is 40 km / h.

View solution

What is the average speed for the journey?

A 40 km / h **B** 50 km / h **C** 60 km / h **D** 120 km / h

View solution

4 Weight is an example of which quantity?

A acceleration

B force

C mass

D pressure

© UCLES 2015

5 A metal block has the dimensions shown. Its mass is 1000 g.

View solution

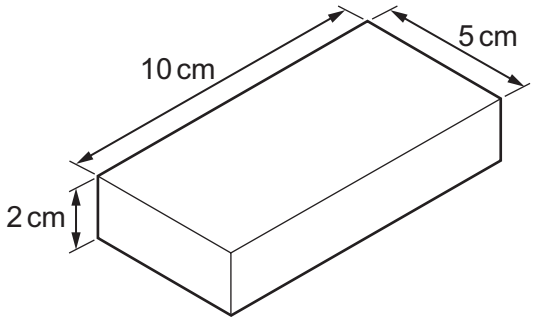

What is the density of the metal?

A $\left(\frac{5 \times 10}{1000 \times 2}\right) \text{g/cm}^3$

B $\left(\frac{2 \times 5 \times 10}{1000}\right) \text{g/cm}^3$

C $\left(\frac{1000 \times 2}{5 \times 10}\right) \text{g/cm}^3$

D $\left(\frac{1000}{2 \times 5 \times 10}\right) \text{g/cm}^3$

6 A car travels along a horizontal road at a constant speed. Three horizontal forces act on the car. The diagram shows two of these three forces.

View solution

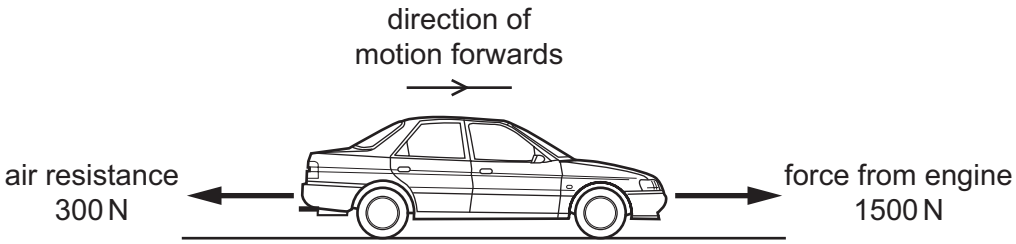

What is the size and the direction of the third horizontal force acting on the car?

A 1200 N backwards

B 1200 N forwards

C 1800 N backwards

D 1800 N forwards

© UCLES 2015

7 The extension-load graph for a spring is shown. The unstretched length of the spring is 17.0 cm.

View solution

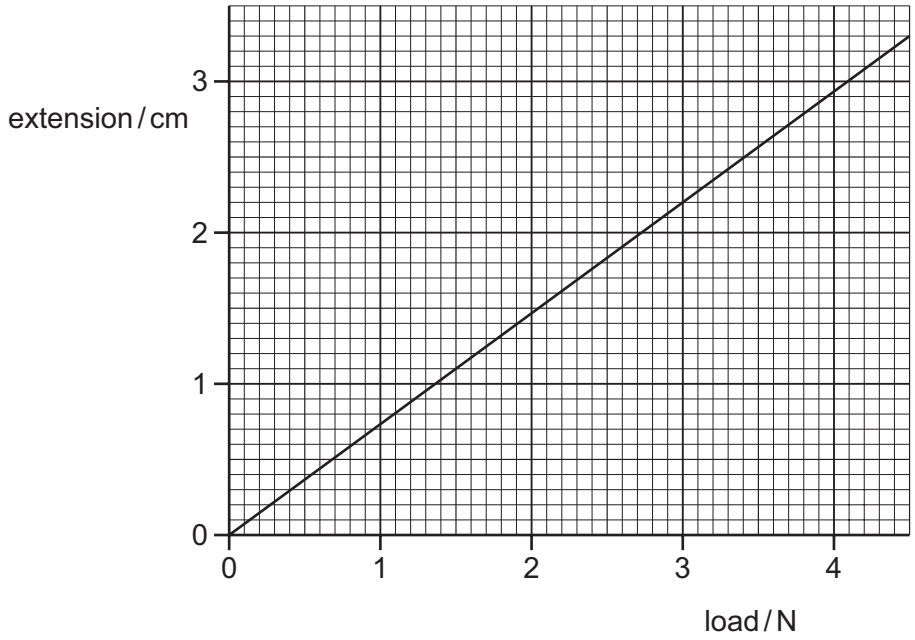

When an object is hung from the spring, the length of the spring is 19.2 cm.

What is the weight of the object?

A 1.4 N **B** 1.6 N **C** 2.6 N **D** 3.0 N

View solution

8 To calculate the power produced by a force, the size of the force must be known.

What else needs to be known to calculate the power?

	the distance the force moves the object	the time for which the force acts on the object
A	✓	✓
B	✓	✗
C	✗	✓
D	✗	✗

key
✓ = needed
✗ = not needed

9 A cyclist travels down a hill from rest at point X, without pedalling.

View solution

The cyclist applies his brakes and the cycle stops at point Y.

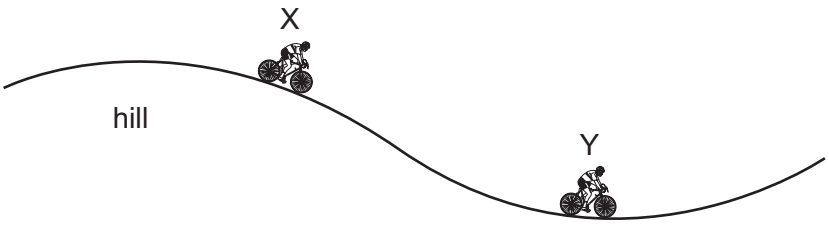

Which energy changes have taken place between X and Y?

A gravitational potential → kinetic → thermal (heat)

B gravitational potential → thermal (heat) → kinetic

C kinetic → gravitational potential → thermal (heat)

D kinetic → thermal (heat) → gravitational potential

10 The diagram shows a manometer with one side connected to a gas cylinder and the other side open to the atmosphere.

View solution

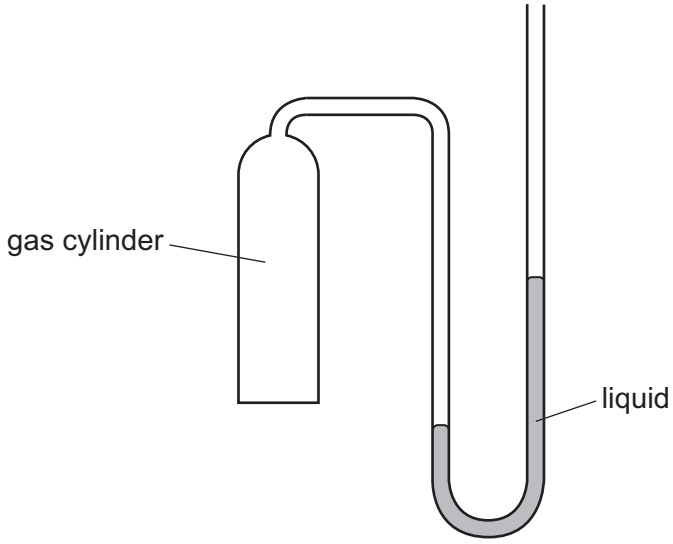

Which conclusion can be made using only the information from liquid levels in the manometer?

A The density of the gas is less than the density of air.

B The density of the gas is greater than the density of air.

C The pressure of the gas is less than atmospheric pressure.

D The pressure of the gas is greater than atmospheric pressure.

© UCLES 2015

11 The diagram shows a solid block resting on a bench. The dimensions of the block are shown.

View solution

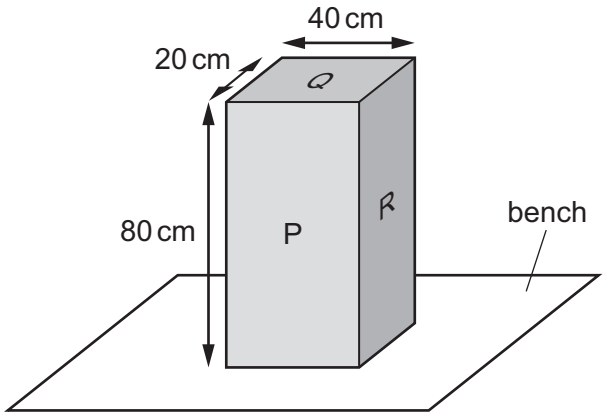

On which labelled surface should the block rest to produce the smallest pressure on the bench?

A P

B Q

C R

D any of P, Q or R

12 Small smoke particles suspended in air are viewed through a microscope.

View solution

The smoke particles move randomly.

What does this show?

A The air consists of fast-moving molecules.

B The pressure of the air is increasing.

C There are convection currents in the air.

D The temperature of the air is increasing.

13 Molecules escape from a liquid during evaporation. The temperature of the remaining liquid changes.

View solution

Which molecules escape and how does the temperature change?

	molecules escaping	temperature of remaining liquid
A	least energetic	decreases
B	least energetic	increases
C	most energetic	decreases
D	most energetic	increases

© UCLES 2015

14 The thermometer in the diagram has no scale.

View solution

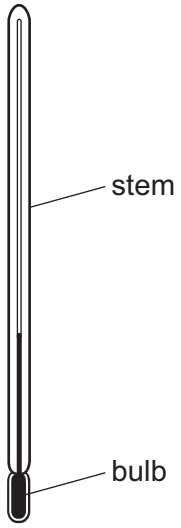

Where must the bulb be placed so that 0 °C can be marked on the stem?

A in a freezer

B in pure boiling water

C in pure cold water

D in pure melting ice

15 A solid is heated from room temperature. The graph shows how its temperature changes with time as it is heated constantly.

View solution

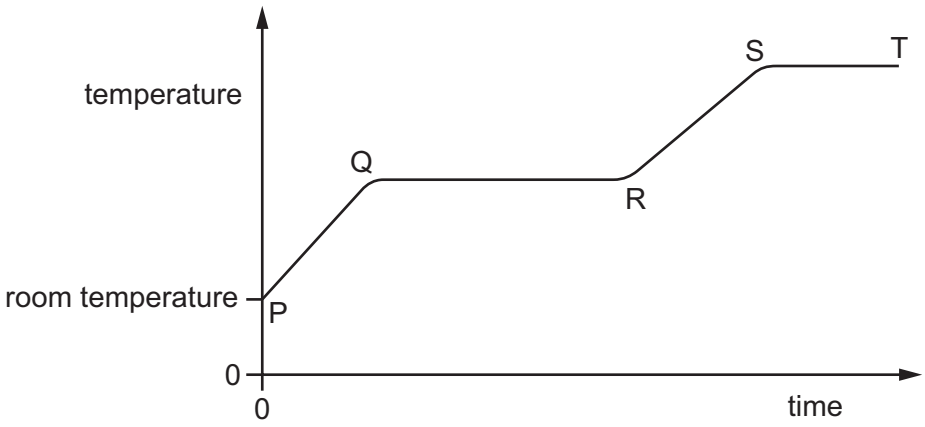

Between which labelled points on the graph is the substance partly solid and partly liquid?

A between P and Q

B between Q and R

C between R and S

D between S and T

16 One method of heat transfer involves the energy travelling at a much greater speed than in other methods.

View solution

What is the name of this method?

A conduction

B convection

C evaporation

D radiation

17 A cupboard is placed in front of a heater. Air can move through a gap under the cupboard.

View solution

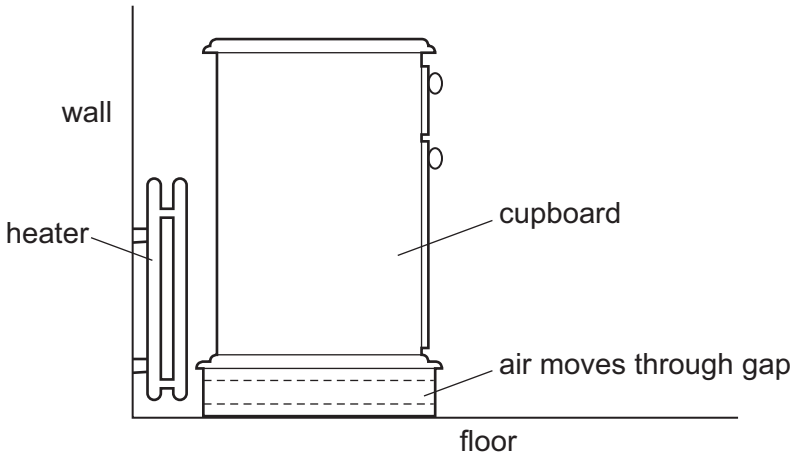

Which row describes the temperature, and the direction of movement, of the air in the gap?

	air temperature	air direction
A	cool	away from the heater
B	cool	towards the heater
C	warm	away from the heater
D	warm	towards the heater

18 What is the frequency of a wave?

View solution

A the distance that a wavefront travels every second

B the distance from one wavefront to the next

C the number of wavefronts produced per second

D the time taken for a wavefront to pass a certain point

© UCLES 2015

19 The diagrams represent water waves in a tank.

View solution

Which diagram represents a wave that changes speed?

A

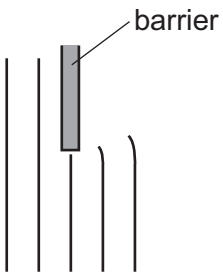

B

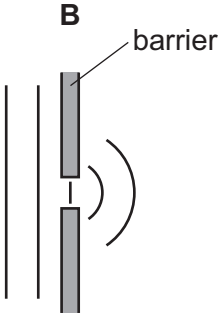

C

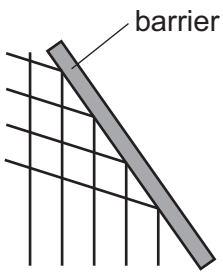

D

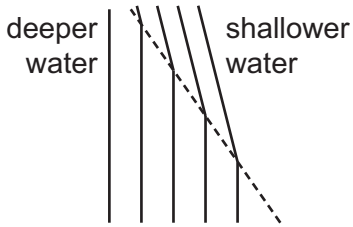

20 Which diagram shows how the light from a candle is reflected by a mirror, and shows the position of the image formed?

View solution

A

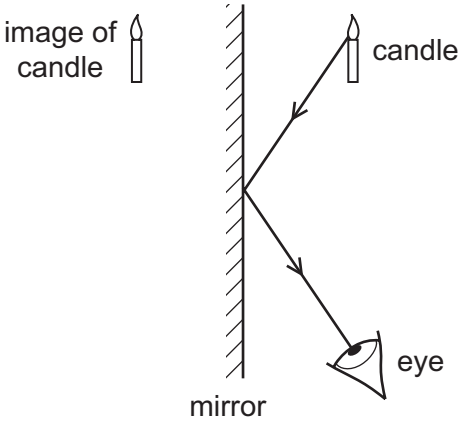

B

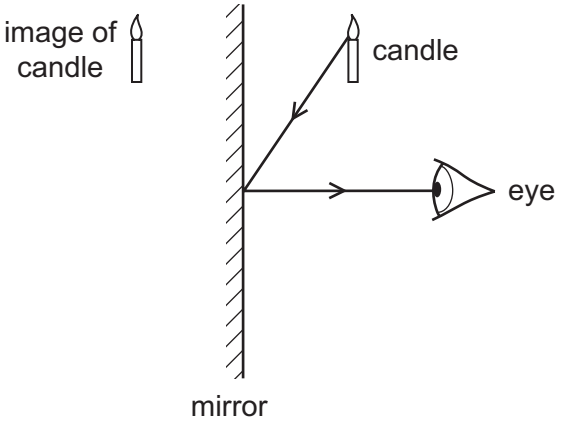

C

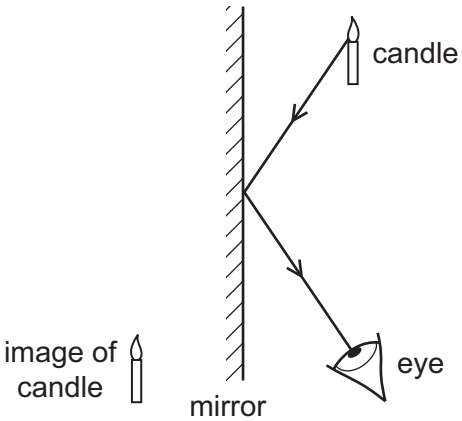

D

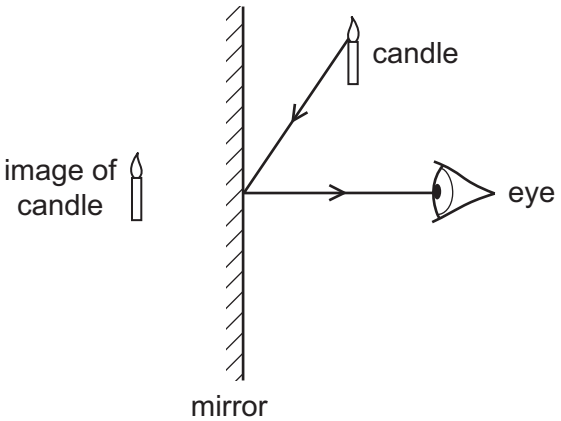

21 Radiation from the Sun is dispersed by a prism. The prism does not absorb any of the radiation. Four identical thermometers are placed, one at each of the labelled positions.

View solution

In which position does the thermometer show the greatest rise in temperature?

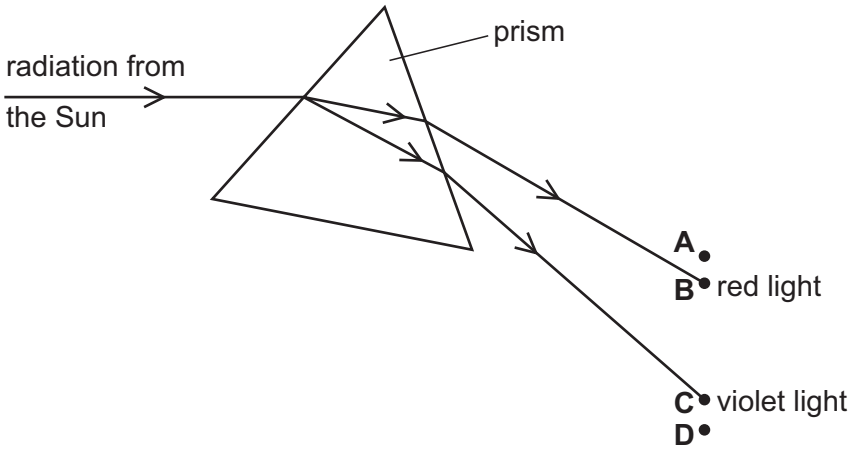

22 A scientist tries to direct a ray of light in a glass block so that no light escapes from the top of the block.

View solution

However, some light does escape.

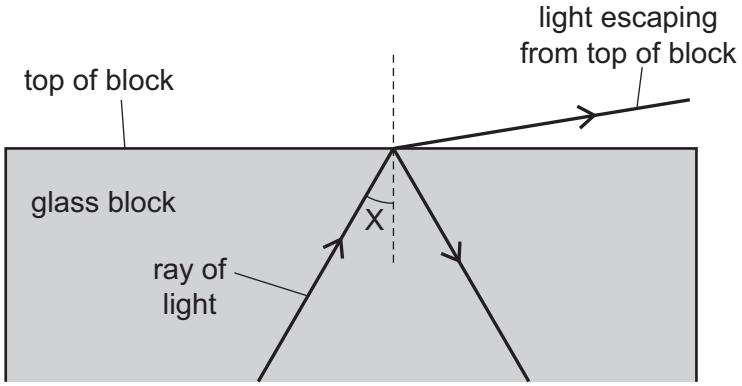

The scientist changes angle X and stops the light escaping from the top.

Which row in the table describes the change to angle X and the name of the effect produced?

	change to angle X	name of effect produced
A	decrease	total internal reflection
B	decrease	total internal refraction
C	increase	total internal reflection
D	increase	total internal refraction

© UCLES 2015

23 The frequency of a musical note is increased.

View solution

A student hearing the sound detects an increase in which property?

A loudness of the sound

B pitch of the sound

C speed of the sound wave

D wavelength of the sound wave

24 A man holding a starting pistol stands 640 m away from a spectator.

View solution

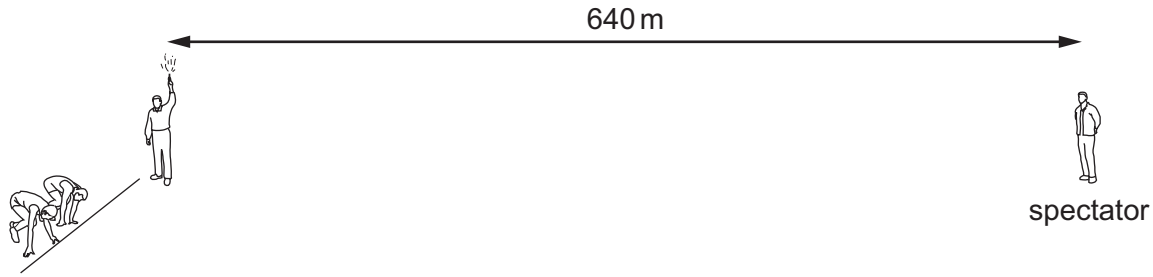

The spectator hears the sound of the starting pistol 2.0 s after seeing the flash from the pistol.

Using this information, what is the speed of sound in air?

A 160 m / s **B** 320 m / s **C** 640 m / s **D** 1280 m / s

25 Which action will demagnetise a magnetised piece of steel?

View solution

A Cool it in a freezer for several hours.

B Hit it repeatedly with a hammer.

C Put it in a coil carrying a direct current (d.c.).

D Put it near an unmagnetised piece of iron.

© UCLES 2015

26 An electromagnet with a soft-iron core is connected to a battery and an open switch. The soft-iron core is just above some small soft-iron nails.

View solution

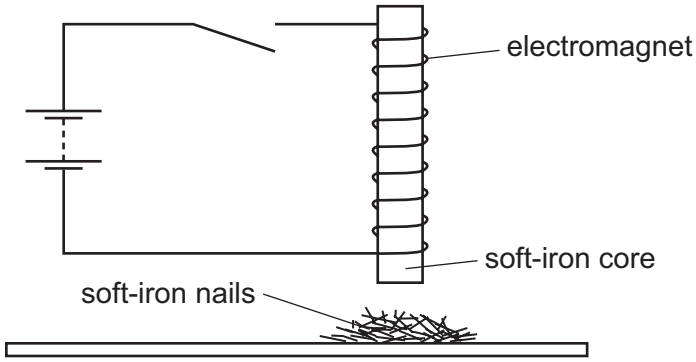

The switch is now closed, left closed for a few seconds, and then opened.

What do the soft-iron nails do as the switch is closed, and what do they do when the switch is then opened?

	as switch is closed	as switch is opened
A	nails jump up	nails fall down
B	nails jump up	nails stay up
C	nails stay down	nails jump up
D	nails stay down	nails stay down

View solution

27 What is the unit of electromotive force (e.m.f.)?

A ampere

B newton

C ohm

D volt

View solution

28 Which sample of copper wire has the greatest electrical resistance?

	length of wire / m	diameter of wire / mm
A	1.0	2.0
B	1.0	4.0
C	10	2.0
D	10	4.0

View solution

© UCLES 2015

29 The circuit diagram shows a 4.0 Ω resistor and an 8.0 Ω resistor connected to a 6.0 V battery.

View solution

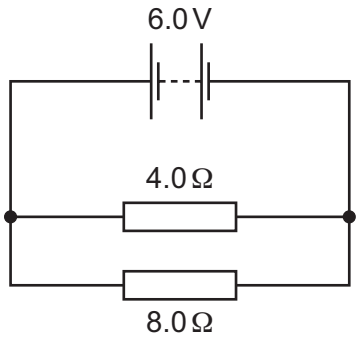

What is the current in the 8.0 Ω resistor?

A 0 A **B** 0.50 A **C** 0.75 A **D** 1.0 A

30 The diagram shows a circuit which includes an uncharged capacitor and a switch.

View solution

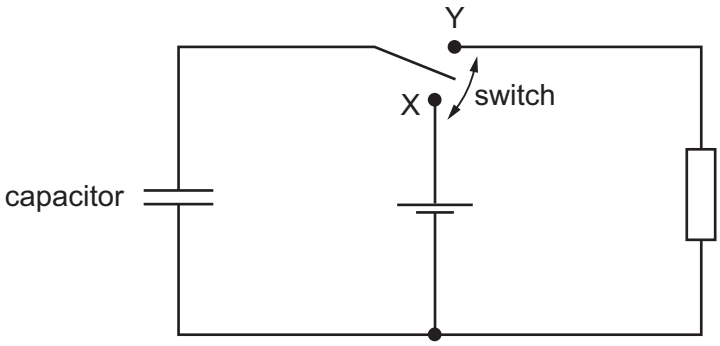

The switch can be moved between position X and position Y.

What happens to the capacitor when the switch is moved to position X, and what happens when the switch is then moved to position Y?

	switch at X	switch at Y
A	capacitor charges	capacitor charges
B	capacitor charges	capacitor discharges
C	capacitor discharges	capacitor charges
D	capacitor discharges	capacitor discharges

© UCLES 2015

31 Which component is represented by this circuit symbol?

View solution

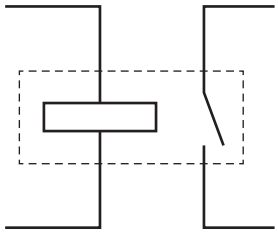

A a bell

B a fuse

C a relay

D a transformer

32 The diagram shows a 10 Ω resistor and a 20 Ω resistor connected in a potential divider circuit.

View solution

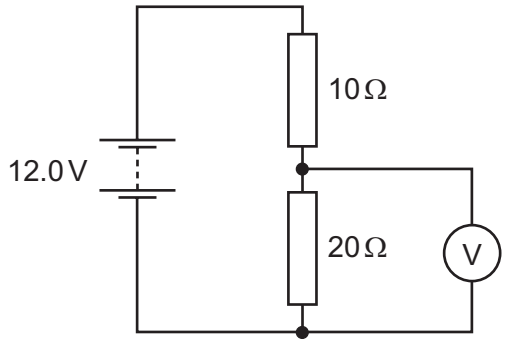

What is the reading on the voltmeter?

A 4.0 V **B** 6.0 V **C** 8.0 V **D** 12.0 V

33 In the circuit shown, only one of the fuses has blown, but none of the lamps is lit.

View solution

Which fuse has blown?

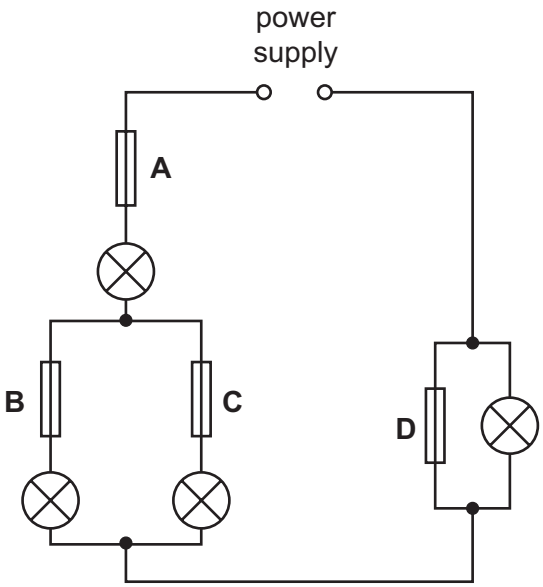

34 A student investigates the force on a bar magnet placed near a current-carrying coil. She carries out three different experiments.

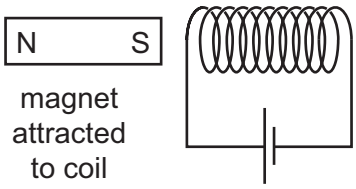

experiment 1

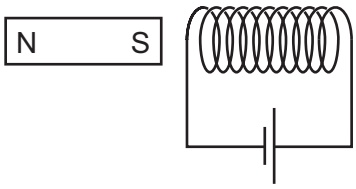

experiment 2

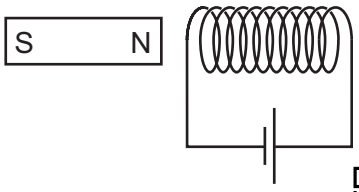

experiment 3

View solution

In experiment 1, the magnet is attracted to the coil.

Which row shows what happens in the other two experiments?

	experiment 2	experiment 3
A	magnet attracted	magnet attracted
B	magnet attracted	magnet repelled
C	magnet repelled	magnet attracted
D	magnet repelled	magnet repelled

© UCLES 2015

35 Which diagram represents the voltage output of a simple a.c. generator?

View solution

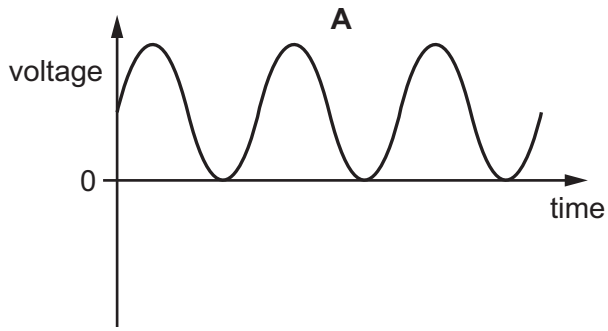

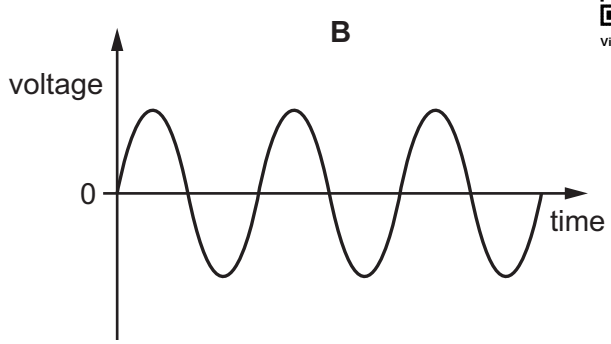

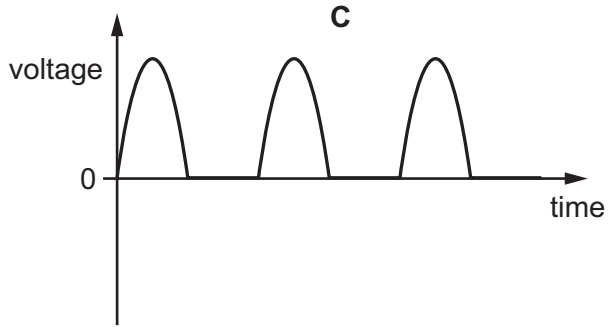



36 A transformer has 400 turns on its secondary coil. An input voltage of 12 V is applied to the primary coil, and an output voltage of 120 V is induced across the secondary coil.

View solution

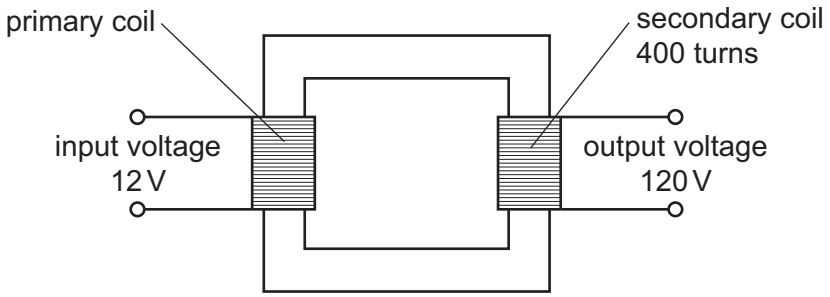

How many turns are on the primary coil of the transformer?

A 12 **B** 40 **C** 400 **D** 4000

37 The diagram shows a cathode-ray tube.

View solution

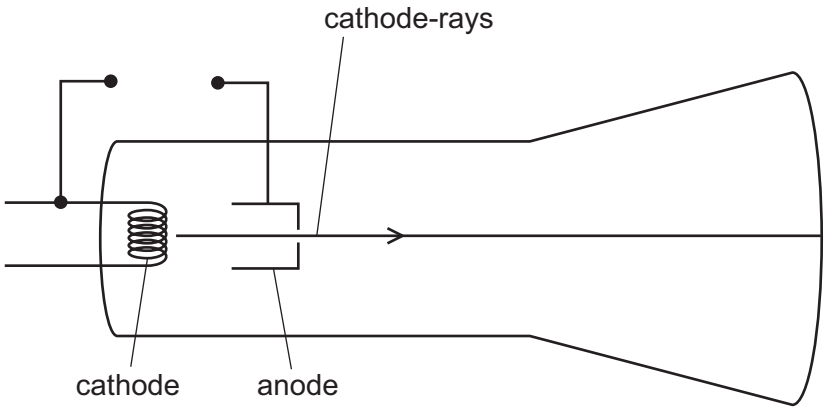

Which electrode should be heated, and which electrode should be positive?

	heated electrode	positive electrode
A	anode	anode
B	anode	cathode
C	cathode	anode
D	cathode	cathode

38 α, β and γ-radiations are emitted by radioactive substances.

View solution

Which statement is correct?

A α-radiation consists of charged particles and is the most highly ionising radiation.

B β-radiation consists of charged particles and is the most penetrating radiation.

C β-radiation consists of uncharged particles and is the least highly ionising radiation.

D γ-radiation consists of uncharged particles and is the least penetrating radiation.

39 The nucleus of an americium atom contains 146 neutrons and 95 protons. It decays by emitting an α-particle.

How many neutrons and how many protons remain in the nucleus when this form of americium decays?

View solution

	number of neutrons remaining	number of protons remaining
A	142	93
B	142	95
C	144	93
D	144	95

© UCLES 2015

40 Which statement is correct for the nucleus of **any** atom?

View solution

A The nucleus contains electrons, neutrons and protons.

B The nucleus contains the same number of protons as neutrons.

C The nucleus has a total charge of zero.

D The nucleus is very small compared with the size of the atom.

© UCLES 2015

BLANK PAGE

BLANK PAGE

Permission to reproduce items where third-party owned material protected by copyright is included has been sought and cleared where possible. Every reasonable effort has been made by the publisher (UCLES) to trace copyright holders, but if any items requiring clearance have unwittingly been included, the publisher will be pleased to make amends at the earliest possible opportunity.

To avoid the issue of disclosure of answer-related information to candidates, all copyright acknowledgements are reproduced online in the Cambridge International Examinations Copyright Acknowledgements Booklet. This is produced for each series of examinations and is freely available to download at www.cie.org.uk after the live examination series.

Cambridge International Examinations is part of the Cambridge Assessment Group. Cambridge Assessment is the brand name of University of Cambridge Local Examinations Syndicate (UCLES), which is itself a department of the University of Cambridge.