Cambridge IGCSE

Cambridge International Examinations
Cambridge International General Certificate of Secondary Education

CANDIDATE NAME									
CENTRE NUMBER						CANDIDATE NUMBER			

PHYSICS **0625/32**

Paper 3 Extended **May/June 2015**

1 hour 15 minutes

Candidates answer on the Question Paper.

No Additional Materials are required.

READ THESE INSTRUCTIONS FIRST

Write your Centre number, candidate number and name on all the work you hand in.
Write in dark blue or black pen.
You may use an HB pencil for any diagrams or graphs.
Do not use staples, paper clips, glue or correction fluid.
DO **NOT** WRITE IN ANY BARCODES.

Answer **all** questions.
Electronic calculators may be used.
You may lose marks if you do not show your working or if you do not use appropriate units.
Take the weight of 1 kg to be 10 N (i.e. acceleration of free fall = 10 m/s^2).

At the end of the examination, fasten all your work securely together.
The number of marks is given in brackets [ ] at the end of each question or part question.

The syllabus is approved for use in England, Wales and Northern Ireland as a Cambridge International Level 1/Level 2 Certificate.

This document consists of **18** printed pages and **2** blank pages.

© UCLES 2015

CAMBRIDGE International Examinations

1 An experiment is carried out to find the acceleration of free fall.

A strip of paper is attached to a heavy object. The object is dropped and falls to the ground, pulling the paper strip through a timer. The timer marks dots on the paper strip at intervals of 0.020 s.

Fig. 1.1 shows a section of the paper strip with the first three dots marked. The first dot on the paper strip, labelled A, is marked at the instant the object is dropped.

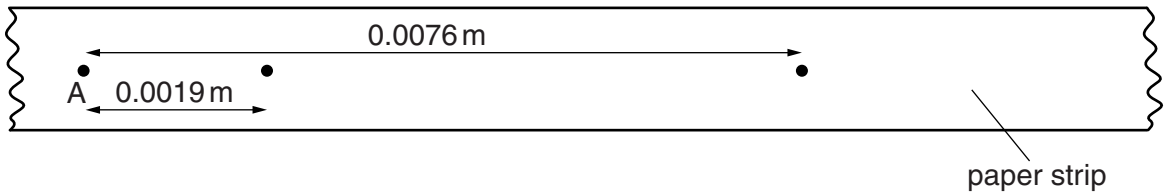

Fig. 1.1 (not to scale)

(a) State how the dots on the paper strip show that the object is accelerating.

View solution

.....

.....[1]

(b) Calculate the average speed of the object

View solution

(i) in the first 0.020 s after the object is dropped,

average speed = ...

(ii) in the second 0.020 s after the object is dropped.

View solution

average speed = ...

[3]

(c) Use the results from **(b)** to calculate the acceleration of the falling object.

View solution

acceleration = ...[3]

[Total: 7]

© UCLES 2015

2 Fig. 2.1 shows a cylinder containing gas compressed by the movement of a piston.

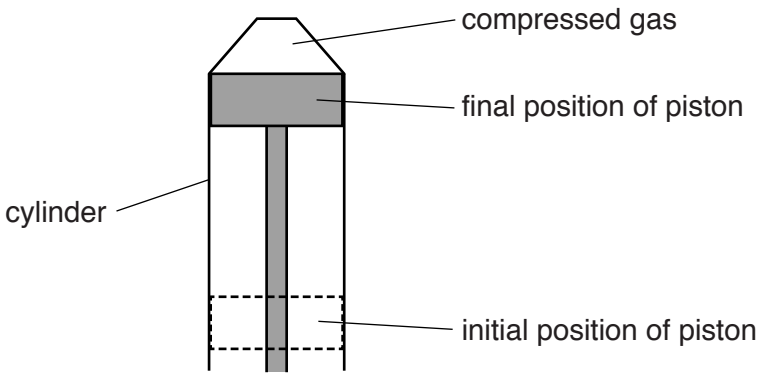

Fig. 2.1

Initially the volume of the gas was 470 cm^3. The piston moves up and compresses the gas to a volume of 60 cm^3. The whole arrangement is left for some time until the gas cools to its original temperature. The pressure of the gas is now 800 kPa.

(a) Calculate the initial pressure of the gas.

View solution

pressure = ...[3]

(b) Explain, in terms of molecules, the effect on the pressure of the gas if it was not given time to cool to its original temperature.

.....

.....

.....

.....[3]

(c) The area of the piston is $5.5 \times 10^{-3}\,m^2$ ($0.0055\,m^2$).

View solution

Calculate the force exerted by the gas on the piston when the pressure is 800 kPa.

force = ...[2]

[Total: 8]

© UCLES 2015

3 An athlete of mass 64 kg is bouncing up and down on a trampoline.

At one moment, the athlete is stationary on the stretched surface of the trampoline. Fig. 3.1 shows the athlete at this moment.

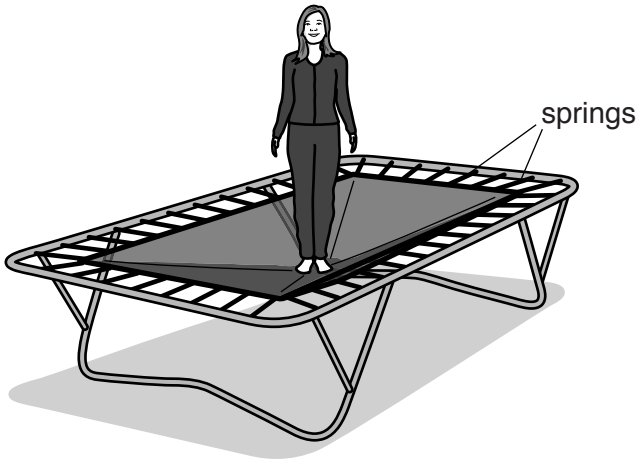

Fig. 3.1

(a) State the form of energy stored due to the stretching of the surface of the trampoline.

View solution

.....[1]

(b) The stretched surface of the trampoline begins to contract. The athlete is pushed vertically upwards and she accelerates. At time *t*, when her upwards velocity is 6.0 m/s, she loses contact with the surface.

(i) Calculate her kinetic energy at time *t*.

View solution

kinetic energy = ...[2]

(ii) Calculate the maximum possible distance she can travel upwards after time *t*.

View solution

maximum distance = ...[3]

© UCLES 2015

(iii) In practice, she travels upwards through a slightly smaller distance than the distance calculated in **(ii)**.

Suggest why this is so.

.....

.....[1]

(c) The trampoline springs are tested. An extension-load graph is plotted for one spring. Fig. 3.2 is the graph.

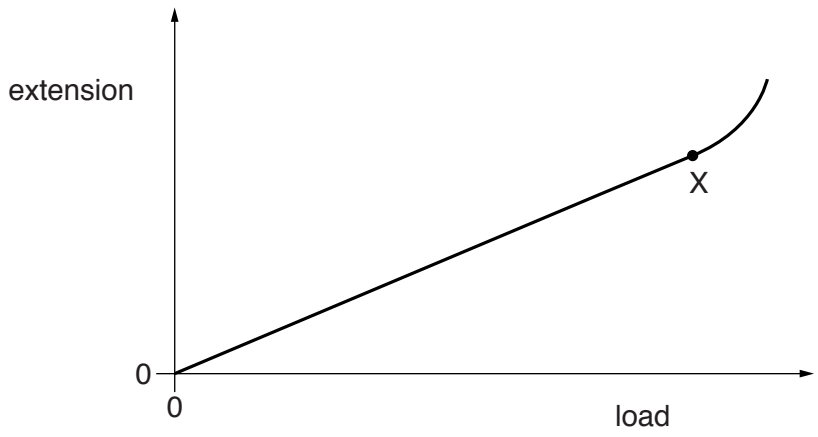

Fig. 3.2

(i) State the name of the point X.

.....[1]

(ii) State the name of the law that the spring obeys between the origin of the graph and point X.

.....[1]

[Total: 9]

4 **(a)** Fig. 4.1 shows a device used as a thermocouple thermometer.

View solution

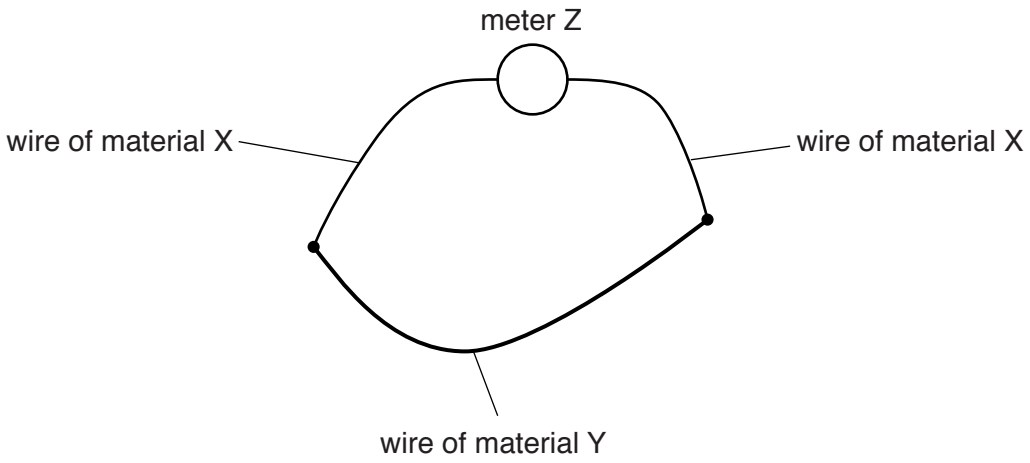

Fig. 4.1

In the table put **three** ticks against the correct statements about the thermocouple thermometer.

Meter Z measures energy.	
Meter Z measures potential difference.	
Meter Z measures power.	
Materials X and Y are different materials.	
Materials X and Y are the same material.	
Materials X and Y are electrical conductors.	
Materials X and Y are electrical insulators.	

[3]

(b) A liquid-in-glass thermometer is replaced by a similar thermometer with a larger bulb. No other change is made.

View solution

State and explain the effect on the sensitivity.

.....

.....

.....[2]

© UCLES 2015

(c) The capillary of a liquid-in-glass thermometer should have a constant diameter.

View solution

Fig. 4.2 shows the capillary of a thermometer made with a manufacturing fault.

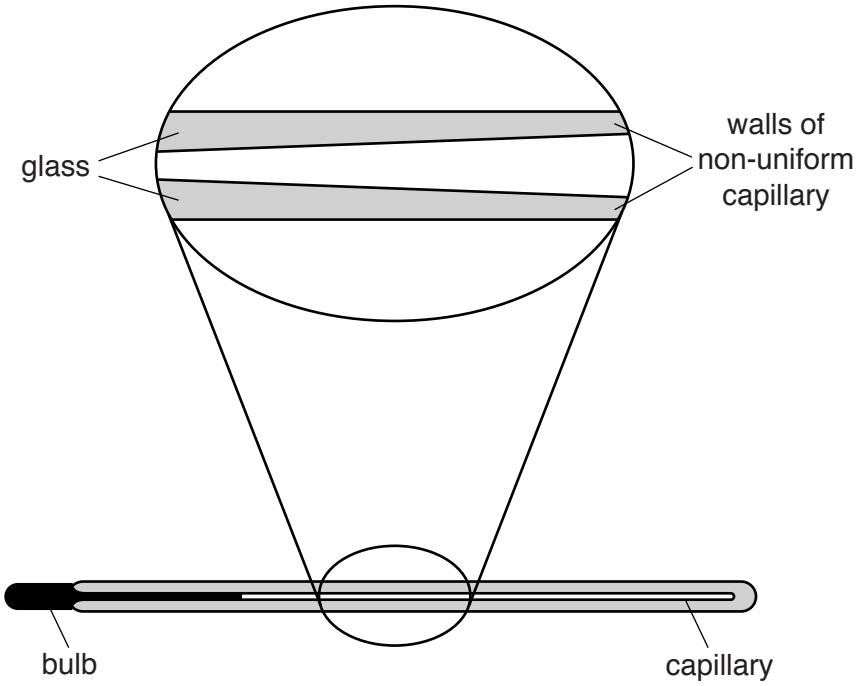

Fig. 4.2 (not to scale)

State and explain the effect of this fault on the linearity of the thermometer.

.....

.....

.....[2]

[Total: 7]

© UCLES 2015

BLANK PAGE

5 **(a)** Fig. 5.1 shows a metal strip, held in a clamp.

View solution

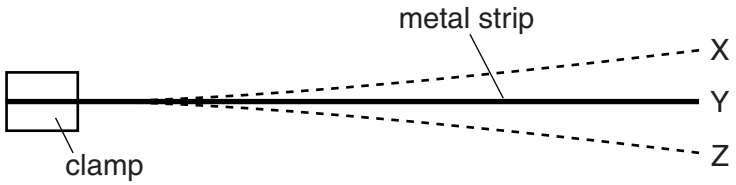

Fig. 5.1

The end of the strip is pulled down and released, so that the strip vibrates. X and Z are the extreme positions of the end of the strip during this vibration. Y is the mid-position.

Explain what is meant by

(i) the *frequency* of vibration of the strip,

.....

.....

(ii) the *amplitude* of vibration of the end of the strip.

View solution

.....

.....

[2]

(b) Fig. 5.2 shows two tall buildings, A and B, that are 99 m apart.

View solution

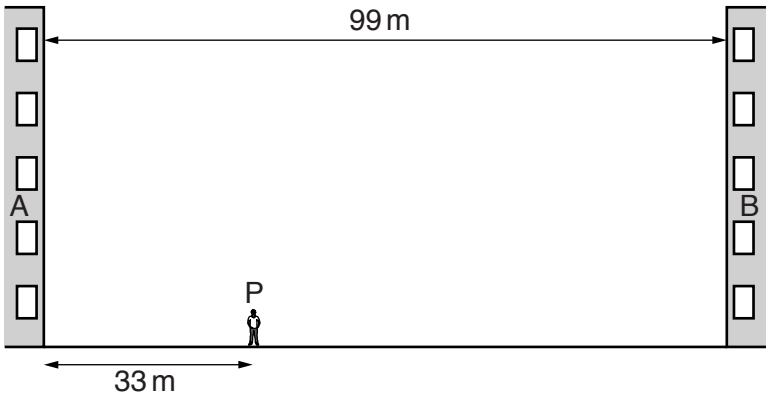

Fig. 5.2 (not to scale)

A student stands at P so that his distance from building A is 33 m. After clapping his hands once, he hears several echoes. The speed of sound in air is 330 m/s.

Calculate the time interval between clapping his hands and hearing

(i) the first echo,

time = ...[2]

(ii) the **third** echo.

View solution

time = ...[1]

(c) Write down an approximate value for the speed of sound

View solution

(i) in water, speed = ...

(ii) in steel. speed = ...

[2]

View solution

(d) Fig. 5.3 shows a dolphin in water emitting a sound wave of frequency 95 kHz.

View solution

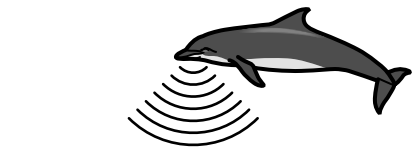

Fig. 5.3 (not to scale)

Using your value from **(c)(i)**, calculate the wavelength of this sound wave.

wavelength = ...[2]

[Total: 9]

6 The refractive index n of glass in air is 1.5.

(a) (i) State the equation that relates the speed of light in air v_a, the speed of light in glass v_g and n.

.....[1]

(ii) The speed of light in air is $3.0 \times 10^8 \text{m/s}$.

Calculate the speed of light in glass.

speed = ...[1]

(b) Light travelling in glass strikes the edge of the glass. Fig. 6.1 shows a ray of light at an angle of 41° to the normal.

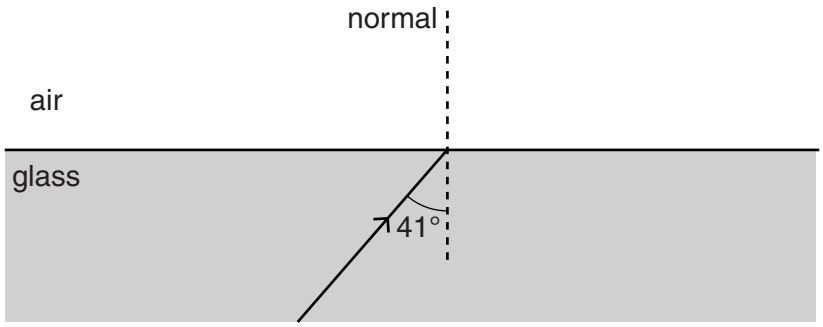

Fig. 6.1

(i) The light passes from the glass into the air.

Calculate the angle that the ray makes with the normal in the air.

angle = ...[2]

(ii) State what happens to light that strikes the edge of the glass at an angle to the normal much larger than 41°.

.....[1]

© UCLES 2015

(c) Describe one example of how optical fibres are used in medicine.

.....

.....

.....

.....[2]

[Total: 7]

View solution

7 A physics teacher suspends two pointers in a magnetic field. One pointer is made of brass and the other is a magnet.

She holds the pointers in the initial positions shown in the two upper circles of Fig. 7.1. She then releases the pointers.

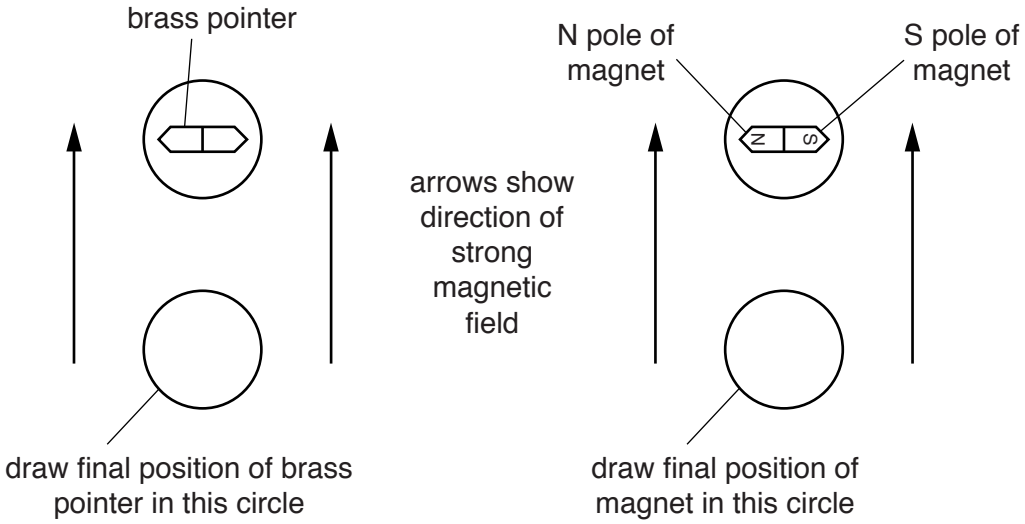

Fig. 7.1

View solution

(a) In the lower circles of Fig. 7.1, draw the settled final positions of the two pointers. [2]

(b) **(i)** Explain the final position of the brass pointer.

View solution

.....

.....

.....

(ii) Explain the final position of the magnet.

View solution

.....

.....

.....

[2]

(c) Suggest a material from which the magnet is made.

.....[1]

[Total: 5]

View solution

© UCLES 2015

8 Fig. 8.1 shows a circuit containing a battery of electromotive force (e.m.f.) 12V and a heater of resistance 6.0Ω.

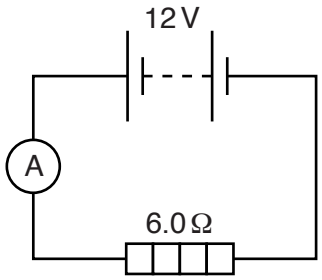

Fig. 8.1

(a) State what is meant by electromotive force (e.m.f.).

View solution

.....

.....[1]

(b) **(i)** Calculate the current in the heater.

View solution

current = ...[2]

(ii) State the name of the particles that flow through the heater.

.....[1]

(iii) On Fig. 8.1, draw an arrow next to the heater symbol to show the direction of flow of these particles through the heater. [1]

(c) Calculate the thermal energy produced in the heater in 10 minutes.

View solution

thermal energy = ...[2]

[Total: 7]

© UCLES 2015

9 Fig. 9.1 represents a transformer.

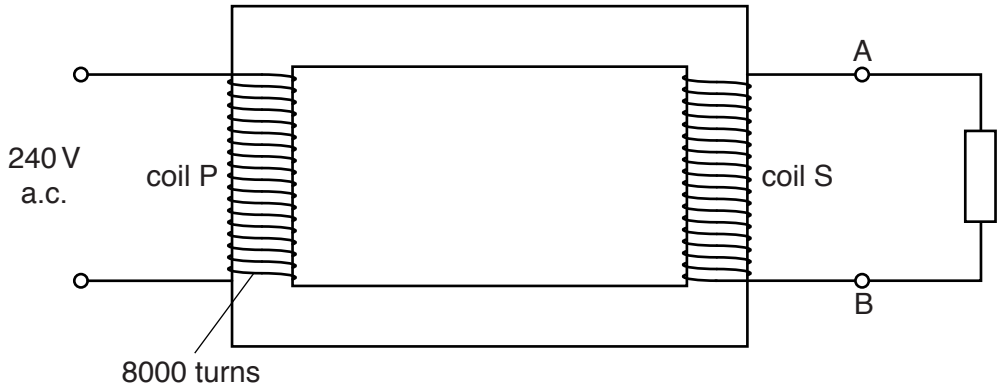

Fig. 9.1

View solution

(a) **(i)** Name the process by which a changing current in the primary coil P causes a changing current in the secondary coil S.

.....[1]

(ii) Suggest a material used for the coils. Explain why this material is used.

View solution

.....

.....

.....[2]

(b) The input to the primary coil P is 240 V. This coil has 8000 turns of wire. The voltage obtained between terminals A and B is 12 V.

(i) Calculate the number of turns of wire in the secondary coil S.

View solution

number of turns = ...[2]

(ii) The resistor connected between the terminals A and B is replaced by four 12 V lamps connected in parallel. The current in each lamp is 1.5 A.

Calculate the current in coil P. Assume the transformer is 100% efficient.

View solution

current = ...[3]

[Total: 8]

© UCLES 2015

10 (a) State the nature of an α-particle.

View solution

.....

.....[1]

(b) Describe how an electric field between two charged plates could be used to determine whether a beam of particles consists of α- or β-particles.

.....

.....

.....[2]

(c) Describe the path of γ-rays in a magnetic field.

View solution

.....

.....[1]

(d) State what is meant by the term *isotopes*. Use the terms proton number and nucleon number in your explanation.

.....

.....

.....

.....

.....[3]

[Total: 7]

View solution

11 Fig. 11.1 shows the main components of a cathode-ray oscilloscope.

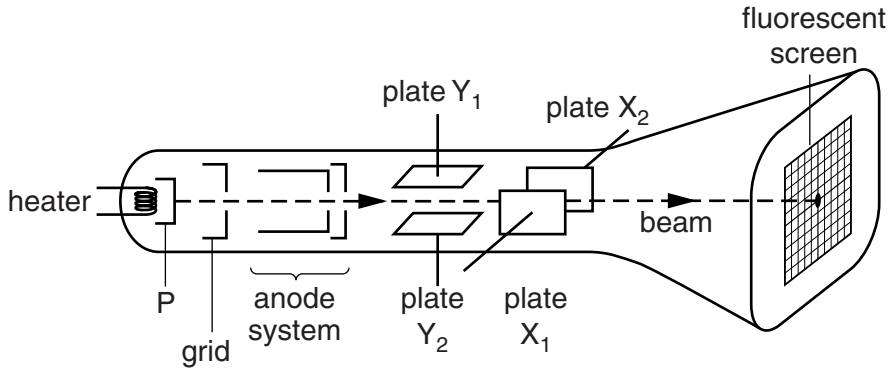

Fig. 11.1

(a) (i) State the function of component P.

View solution

.....

.....[1]

(ii) Tick **one** box to complete the sentence correctly.

View solution

A cathode-ray oscilloscope contains

- ☐ air at about five times normal atmospheric pressure.
- ☐ air at about normal atmospheric pressure.
- ☐ air at about one fifth of normal atmospheric pressure.
- ☐ a vacuum.
- ☐ neon gas.

[1]

© UCLES 2015

(b) Fig. 11.2 shows the front view of the screen of the cathode-ray oscilloscope.

View solution

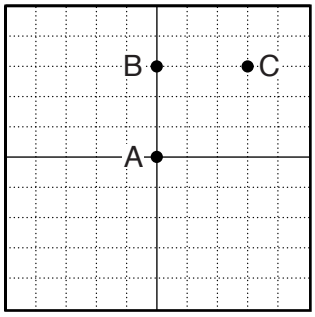

Fig. 11.2

With no voltage applied between the X-plates or between the Y-plates, the spot is at A.

(i) Place **two** ticks in **each** of the blank columns of the table to describe the voltages across the plates when the spot is at points B and C. The column for the spot at A has been completed as an example.

	spot at A	spot at B	spot at C
plate X_1 at higher voltage than plate X_2			
plate X_1 at lower voltage than plate X_2			
no voltage between X-plates	✓		
plate Y_1 at higher voltage than plate Y_2			
plate Y_1 at lower voltage than plate Y_2			
no voltage between Y-plates	✓		

[3]

(ii) Explain your answers for the spot at point B.

View solution

.....

.....

.....

.....[1]

[Total: 6]

BLANK PAGE

Permission to reproduce items where third-party owned material protected by copyright is included has been sought and cleared where possible. Every reasonable effort has been made by the publisher (UCLES) to trace copyright holders, but if any items requiring clearance have unwittingly been included, the publisher will be pleased to make amends at the earliest possible opportunity.

To avoid the issue of disclosure of answer-related information to candidates, all copyright acknowledgements are reproduced online in the Cambridge International Examinations Copyright Acknowledgements Booklet. This is produced for each series of examinations and is freely available to download at www.cie.org.uk after the live examination series.

Cambridge International Examinations is part of the Cambridge Assessment Group. Cambridge Assessment is the brand name of University of Cambridge Local Examinations Syndicate (UCLES), which is itself a department of the University of Cambridge.

© UCLES 2015