Cambridge IGCSE

Cambridge International Examinations
Cambridge International General Certificate of Secondary Education

CANDIDATE NAME									
CENTRE NUMBER						CANDIDATE NUMBER				

PHYSICS **0625/51**

Paper 5 Practical Test **May/June 2015**

1 hour 15 minutes

Candidates answer on the Question Paper.

Additional Materials: As listed in the Confidential Instructions.

READ THESE INSTRUCTIONS FIRST

Write your Centre number, candidate number and name in the spaces at the top of the page.
Write in dark blue or black pen.
You may use an HB pencil for any diagrams or graphs.
Do not use staples, paper clips, glue or correction fluid.
DO **NOT** WRITE IN ANY BARCODES.

Answer **all** questions.
Electronic calculators may be used.
You may lose marks if you do not show your working or if you do not use appropriate units.

At the end of the examination, fasten all your work securely together.
The number of marks is given in brackets [ ] at the end of each question or part question.

For Examiner's Use	
1	
2	
3	
4	
Total	

The syllabus is approved for use in England, Wales and Northern Ireland as a Cambridge International Level 1/Level 2 Certificate.

This document consists of **10** printed pages and **2** blank pages.

© UCLES 2015

CAMBRIDGE International Examinations

1 In this experiment, you will determine the weight of a metre rule using a balancing method.

Carry out the following instructions, referring to Fig. 1.1.

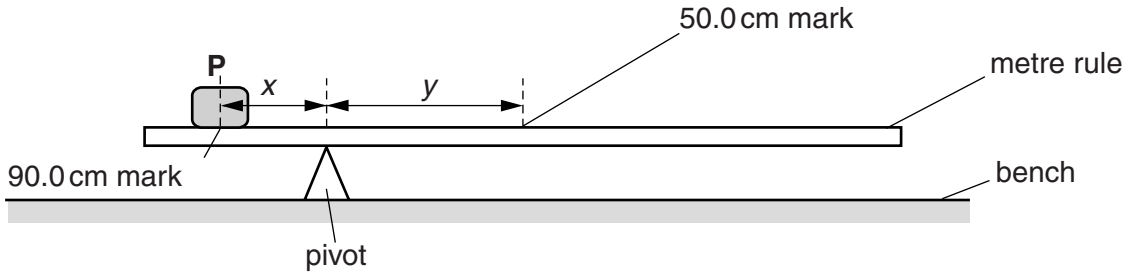

Fig. 1.1

(a) Place the metre rule on the pivot. Place the load **P** on the metre rule at the 90.0 cm mark.

View solution

Keeping **P** at the 90.0 cm mark, adjust the position of the metre rule on the pivot so that the metre rule is as near as possible to being balanced.

(i) Write down the reading on the metre rule at the position of the pivot.

The pivot is at the ..... cm mark of the metre rule.

(ii) Record the distance x from the 90.0 cm mark to the pivot.

x = ...[1]

(iii) Record the distance y from the pivot to the 50.0 cm mark.

y = ...[1]

(iv) Determine the weight W of the metre rule using the equation $W = \frac{Px}{y}$, where P = 2.0 N. P is the weight of load **P**.

W = ...[1]

(b) Keep the pivot at the same position, as recorded in **(a)(i)**.

Move load **P** to the 95.0 cm mark. Place the load **Q** on the metre rule and adjust its position so that the rule balances.

(i) On Fig. 1.2 mark, with a letter X, the approximate position of **Q**. [1]

View solution

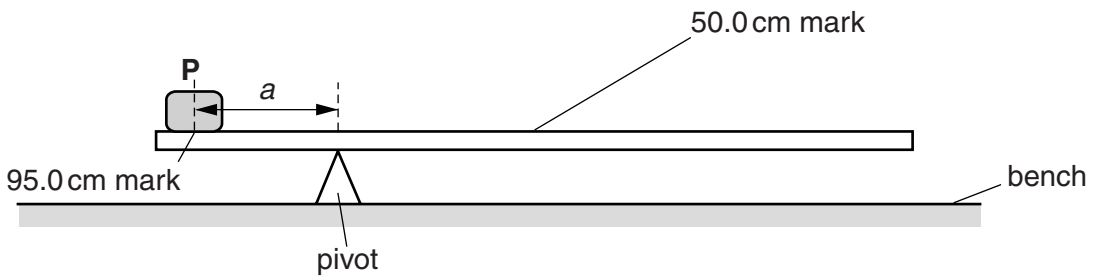

Fig. 1.2

© UCLES 2015

(ii) Record the distance *a* from the 95.0 cm mark to the pivot.

View solution

a = ...

(iii) Record the distance *b* from **Q** to the pivot.

View solution

b = ...

(iv) Record the distance *c* from the 50.0 cm mark to the pivot.

View solution

c = ...

[1]

(v) Calculate the product *aP*, where *P* = 2.0 N. Include the unit.

View solution

aP = ...

(vi) Calculate the product *bQ*, where *Q* = 1.0 N. *Q* is the weight of load **Q**.

View solution

bQ = ...

(vii) Calculate the product *cW*, using the value of *W* determined in part **(a)(iv)**.

View solution

cW = ...

[2]

(c) A student suggests that *aP* should be equal to *bQ* + *cW*.

State whether your results support the suggestion. Justify your answer by reference to the results.

View solution

statement .....

justification .....

.....

[2]

(d) Suggest one practical reason why it is difficult to obtain exact results with this experiment.

View solution

.....

.....[1]

[Total: 10]

© UCLES 2015

2 In this experiment, you will investigate the cooling of water.

Carry out the following instructions referring to Fig. 2.1. You are provided with a beaker containing hot water and a thermometer.

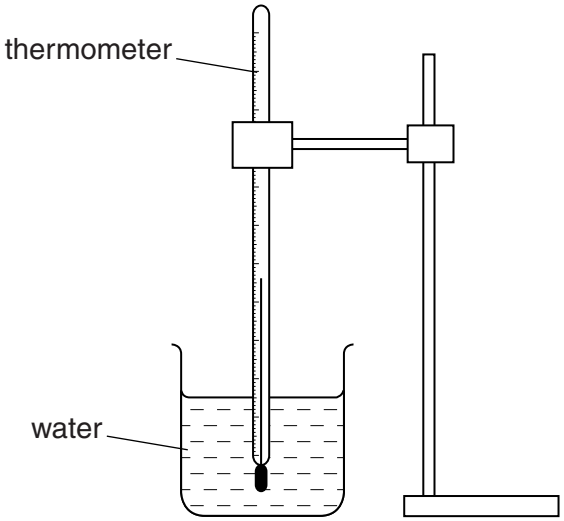

Fig. 2.1

View solution

(a) (i) Place the thermometer in the beaker of water. When the thermometer reading stops rising, measure the temperature θ of the water and immediately start the stopclock. Record θ in Table 2.1 at time $t = 0$ s.

(ii) In Table 2.1, record the temperature of the water at 30 s intervals until you have a total of six values up to time $t = 150$ s.

View solution

Table 2.1

t/s	θ/°C
0	
30	
60	
90	
120	
150	

[3]

© UCLES 2015

(b) Plot a graph of θ/°C (y-axis) against t/s (x-axis).

View solution

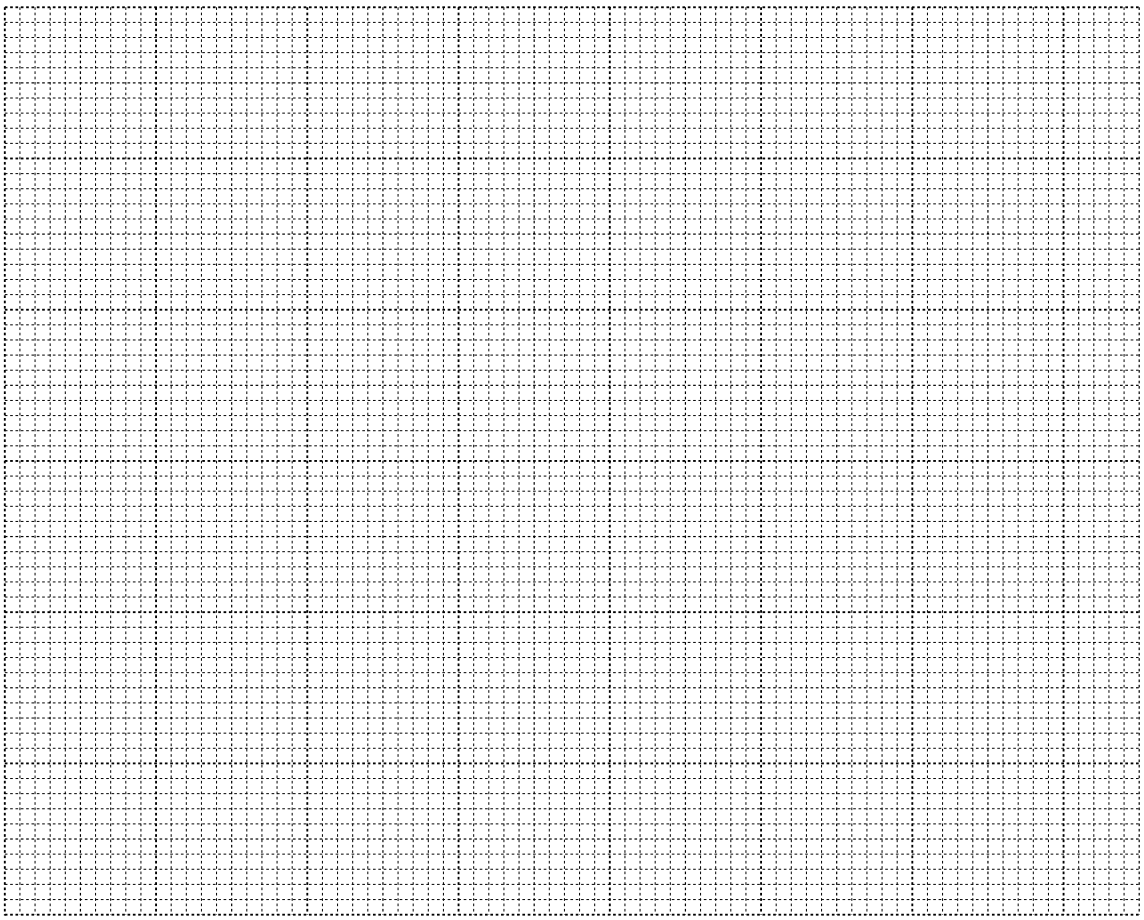

[5]

(c) **(i)** State whether the rate of cooling of the water in the beaker increases, decreases or stays approximately constant during the period of cooling.

The rate of cooling of the water .....[1]

(ii) Justify your statement by reference to the graph.

View solution

.....

.....

.....[1]

[Total: 10]

© UCLES 2015

3 In this experiment, you will investigate the resistance of lamp filaments in series and parallel circuits.

The circuit shown in Fig. 3.1 has been set up for you.

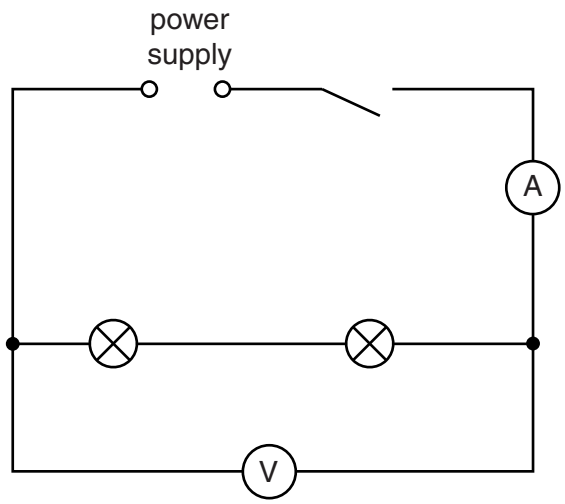

Fig. 3.1

View solution

(a) (i) Switch on. Measure and record the potential difference V_S across the lamps and the current I_S in the circuit. Switch off.

V_S = ...

I_S = ...

[2]

(ii) Calculate the resistance R_S of the lamp filaments using the equation $R_S = \frac{V_S}{I_S}$.

View solution

R_S = ...[1]

(b) The circuit is to be rearranged so that

- the lamps are in parallel
- the ammeter will measure the total current in the circuit
- the voltmeter will measure the potential difference across the lamps.

Draw a diagram of this circuit using standard circuit symbols.

View solution

[2]

(c) Rearrange the circuit as described in **(b)**.

View solution

(i) Switch on. Measure and record the potential difference V_P across the lamps and the current I_P in the circuit. Switch off.

V_P = ...

I_P = ...

[1]

(ii) Calculate the resistance R_P of the lamp filaments using the equation $R_P = \frac{V_P}{I_P}$.

View solution

R_P = ...

(iii) Calculate the ratio $\frac{R_S}{R_P}$.

View solution

$\frac{R_S}{R_P}$ = ...

[2]

(d) A student wishes to investigate whether the ratio $\frac{R_S}{R_P}$ for the two lamps is the same under all conditions.

(i) Suggest a variable that you could change in order to obtain further sets of readings. You are not asked to take any further readings.

.....

(ii) Explain briefly how you would change this variable.

View solution

.....

.....

[2]

[Total: 10]

BLANK PAGE

4 In this experiment, you will investigate the refraction of light passing through a transparent block.

Carry out the following instructions, referring to Fig. 4.1.

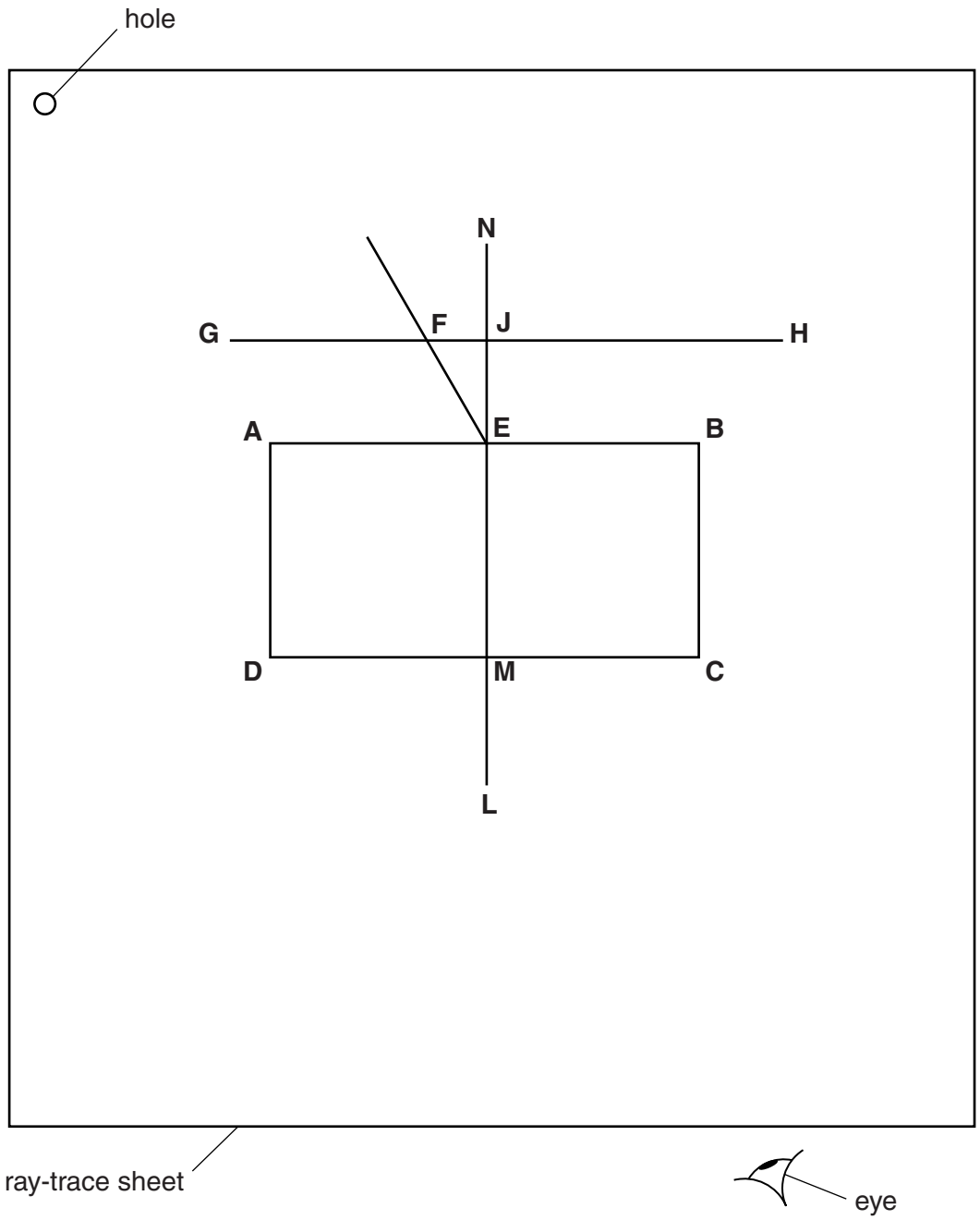

Fig. 4.1

View solution

(a) Place the transparent block, largest face down, on the ray-trace sheet supplied. The block should be approximately in the middle of the paper. Draw the outline of the block **ABCD**.

(b) Remove the block and draw a normal **NL** at the centre of side **AB**. Label the point **E** where the normal crosses **AB**. Label the point **M** where the normal crosses **CD**.

(c) Draw a line **GH**, parallel to **AB** and 6.0 cm above **AB**. Label the point **J** where the normal crosses **GH**.

(d) Draw a line, starting at **E**, to the left of the normal and at an angle of incidence $i = 30°$ to the normal as shown in Fig. 4.1. Label the point **F** where the line meets **GH**.

© UCLES 2015

(e) Place two pins P_1 and P_2 on the line **FE**, placing one pin close to **E**. Label the positions of P_1 and P_2.

(f) Replace the block and observe the images of P_1 and P_2 through side **CD** of the block so that the images of P_1 and P_2 appear one behind the other. Place two pins P_3 and P_4 between your eye and the block so that P_3 and P_4, and the images of P_1 and P_2 seen through the block, appear one behind the other. Label the positions of P_3 and P_4. Remove the block.

(g) Draw a line joining the positions of P_3 and P_4. Continue the line until it meets **CD** and label this point **K**. Draw the line **KE**.

(h) **(i)** Measure and record the length *a* between points **F** and **J**.

View solution

a = ...

(ii) Measure and record the length *b* between points **F** and **E**.

View solution

b = ...

(iii) Measure and record the length *c* between points **E** and **K**.

View solution

c = ...

(iv) Measure and record the length *d* between points **M** and **K**.

View solution

d = ...

[2]

(i) Calculate *n*, the refractive index of the material of the block, using the equation $n = \frac{ac}{bd}$.

View solution

n = ... [1]

(j) Repeat steps **(d)**–**(h)** but with the angle of incidence $i = 50°$.

View solution

a = ...

b = ...

c = ...

d = ...

n = ...

[2]

(k) Suggest one precaution that you should take with this experiment to obtain reliable results.

.....

.....

.....[1]

Tie your ray-trace sheet into this Booklet between pages 10 and 11.

View solution [4]

[Total: 10]

© UCLES 2015

BLANK PAGE

Permission to reproduce items where third-party owned material protected by copyright is included has been sought and cleared where possible. Every reasonable effort has been made by the publisher (UCLES) to trace copyright holders, but if any items requiring clearance have unwittingly been included, the publisher will be pleased to make amends at the earliest possible opportunity.

To avoid the issue of disclosure of answer-related information to candidates, all copyright acknowledgements are reproduced online in the Cambridge International Examinations Copyright Acknowledgements Booklet. This is produced for each series of examinations and is freely available to download at www.cie.org.uk after the live examination series.

Cambridge International Examinations is part of the Cambridge Assessment Group. Cambridge Assessment is the brand name of University of Cambridge Local Examinations Syndicate (UCLES), which is itself a department of the University of Cambridge.