Cambridge IGCSE

Cambridge International Examinations
Cambridge International General Certificate of Secondary Education

CANDIDATE NAME									
CENTRE NUMBER						CANDIDATE NUMBER				

PHYSICS **0625/52**

Paper 5 Practical Test **May/June 2015**

1 hour 15 minutes

Candidates answer on the Question Paper.

Additional Materials: As listed in the Confidential Instructions.

READ THESE INSTRUCTIONS FIRST

Write your Centre number, candidate number and name in the spaces at the top of the page.
Write in dark blue or black pen.
You may use an HB pencil for any diagrams or graphs.
Do not use staples, paper clips, glue or correction fluid.
DO **NOT** WRITE IN ANY BARCODES.

Answer **all** questions.
Electronic calculators may be used.
You may lose marks if you do not show your working or if you do not use appropriate units.

At the end of the examination, fasten all your work securely together.
The number of marks is given in brackets [ ] at the end of each question or part question.

For Examiner's Use	
1	
2	
3	
4	
Total	

The syllabus is approved for use in England, Wales and Northern Ireland as a Cambridge International Level 1/Level 2 Certificate.

This document consists of **10** printed pages and **2** blank pages.

© UCLES 2015

CAMBRIDGE International Examinations

1 In this experiment, you will investigate a pendulum.

Carry out the following instructions referring to Figs. 1.1 and 1.2.

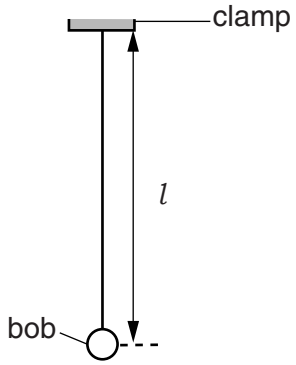

Fig. 1.1

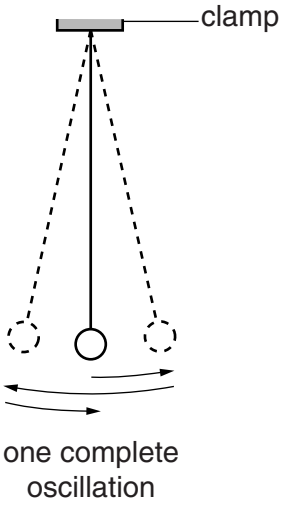

Fig. 1.2

A pendulum has been set up for you.

(a) Adjust the pendulum until its length $l = 50.0\,\text{cm}$. The length l is measured to the centre of the bob.

State one precaution that you took to measure the length l as accurately as possible. You may draw a diagram.

View solution

.....

.....[1]

(b) (i) Displace the pendulum bob slightly and release it so that it swings. Measure the time t for 20 complete oscillations of the pendulum (see Fig. 1.2).

View solution

$t =$ ..... [1]

(ii) Calculate the period T of the pendulum. The period is the time for one complete oscillation.

$T =$ .....[1]

(iii) Explain why measuring the time for 20 oscillations, rather than for 1 oscillation, gives a more accurate value for T.

.....

.....[1]

(c) Adjust the length of the pendulum until its length $l = 100.0\,\text{cm}$. Repeat steps **(b)(i)** and **(b)(ii)**.

View solution

$t =$ .....

$T =$ .....

[2]

(d) A student suggests that doubling the length l of the pendulum should double the period T.

State whether your results support this suggestion. Justify your answer by reference to the results.

View solution

statement .....

justification .....

.....

[2]

(e) To continue the investigation of the relationship between the length l of the pendulum and the period T, it is necessary to use a range of values of length l.

List additional l values that you would plan to use in the laboratory. You are not asked to make any more measurements.

.....[2]

[Total: 10]

View solution

2 In this experiment, you will investigate the cooling of water.

Carry out the following instructions referring to Fig. 2.1.

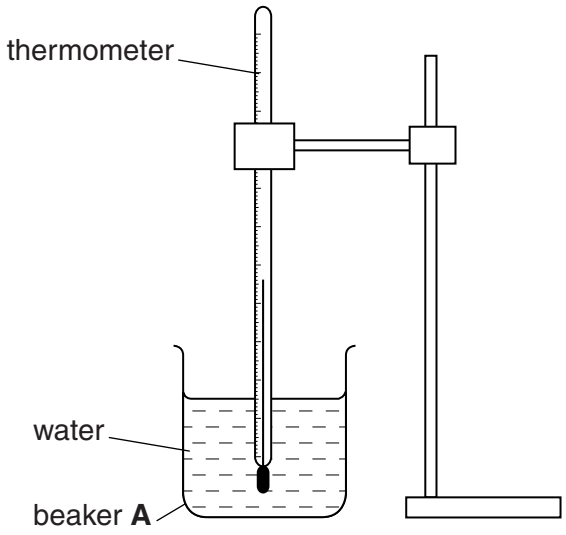

Fig. 2.1

(a) Pour 100 cm^3 of hot water into beaker **A**. Place the thermometer in beaker **A**, as shown in Fig. 2.1.

(i) Record the temperature θ_H of the hot water in beaker **A**.

View solution

θ_H = ...[1]

(ii) State one precaution that you took to ensure that the temperature reading for the hot water is as reliable as possible.

.....

.....[1]

(b) (i) Add 50 cm^3 of cold water to the hot water in beaker **A**. Stir briefly. Record the temperature θ_1.

θ_1 = ...

(ii) Calculate the decrease in temperature θ_A using the equation $\theta_A = (\theta_H - \theta_1)$.

View solution

θ_A = ...
[2]

(c) (i) Add a further 100 cm^3 of cold water to the water in beaker **A**. Stir briefly. Record the temperature θ_2.

θ_2 = ...

(ii) Calculate the decrease in temperature θ_B using the equation $\theta_B = (\theta_1 - \theta_2)$.

View solution

θ_B = ...
[2]

© UCLES 2015

(d) Suggest two factors, other than the volume and temperature of the cold water added, that affect the decrease in temperature of the hot water.

1. .....

.....

2. .....

.....

[2]

(e) Describe briefly how a measuring cylinder is read to obtain an accurate value for the volume of water. You may draw a diagram.

View solution

.....

.....

.....

.....[2]

[Total: 10]

3 In this experiment, you will investigate the resistance of lamps.

The circuit shown in Fig. 3.1 has been set up for you.

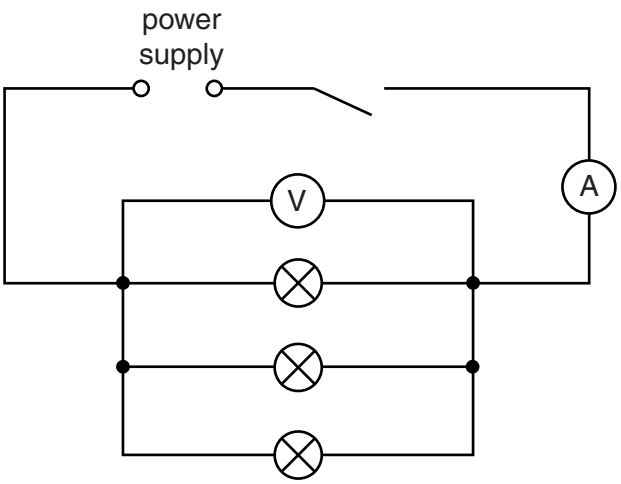

Fig. 3.1

View solution

(a) (i) Switch on. Measure and record the potential difference V_P across the lamps and the current I_P in the circuit. Switch off.

V_P = ...

I_P = ...

[2]

(ii) Calculate the combined resistance R_P of the lamps using the equation $R_P = \frac{V_P}{I_P}$.

View solution

R_P = ...[1]

(b) Disconnect and remove one of the lamps.

View solution

The remaining components are to be arranged to make a circuit in which
- the two lamps are in series
- the ammeter will measure the total current in the circuit
- the voltmeter will measure the potential difference across both lamps.

In the space below, draw a diagram of this circuit using standard circuit symbols.

[2]

(c) Set up the circuit as described in **(b)**.

View solution

(i) Switch on. Measure and record the potential difference V_S across the two lamps and the current I_S in the circuit. Switch off.

V_S = ...

I_S = ...

[1]

(ii) Calculate the resistance R_S of the lamps using the equation $R_S = \frac{V_S}{I_S}$.

View solution

R_S = ...[2]

(d) **(i)** A student wishes to vary the current in the circuit in Fig. 3.1, using a variable resistor.

View solution

In the space below, draw the standard circuit symbol for a variable resistor.

[1]

(ii) On Fig. 3.1, label with X a suitable position in the circuit for a variable resistor used to vary the current in all the lamps. [1]

[Total: 10]

© UCLES 2015

4 In this experiment, you will investigate reflection using a plane mirror.

Carry out the following instructions, referring to Fig. 4.1.

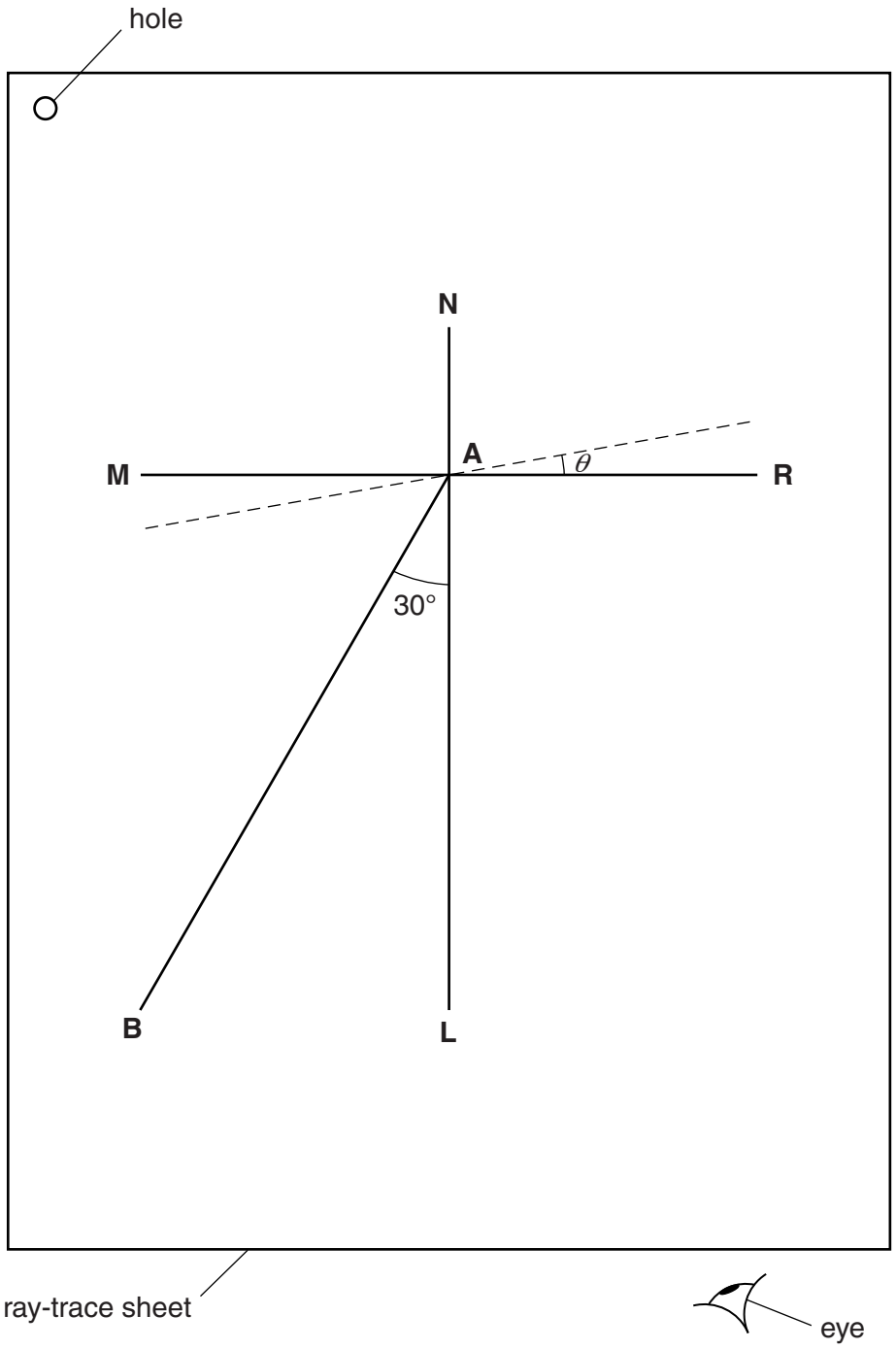

Fig. 4.1

View solution

(a) Draw a line 10 cm long near the middle of the blank ray-trace sheet supplied. Label the line **MR**. Draw a normal to this line that passes through its centre. Label the normal **NL**. Label the point at which **NL** crosses **MR** with the letter **A**.

(b) Draw a line 8 cm long from **A** at an angle of incidence $i = 30°$ to the normal, below **MR** and to the left of the normal. Label the end of this line **B**.

(c) Place the reflecting face of the mirror vertically on the line **MR**.

© UCLES 2015

(d) Place two pins P_1 and P_2 on line **AB** a suitable distance apart.

(e) View the images of pins P_1 and P_2 from the direction indicated by the eye in Fig. 4.1. Place two pins P_3 and P_4, some distance apart, so that pins P_3 and P_4, and the images of P_1 and P_2, all appear exactly one behind the other. Label the positions of P_3 and P_4.

(f) Remove pins P_3 and P_4 and the mirror. Draw the line joining the positions of P_3 and P_4. Extend the line until it meets **NL**.

(g) Measure, and record in Table 4.1, the angle α between **NL** and the line joining the positions of P_3 and P_4. At this stage the angle θ between the mirror and line **MR** is 0°, as shown in the table.

(h) Remove pins P_1 and P_2. Draw lines at angles θ = 10°, 20° and 30° to **MR**, one of which is shown in Fig. 4.1. Repeat steps **(d)** to **(g)**, placing the mirror on each of the new lines in turn, so that you obtain four sets of readings.

View solution

Table 4.1

θ/°	α/°
0	
10	
20	
30	

[1]

(i) Plot a graph of α/° (*y*-axis) against θ/° (*x*-axis).

View solution

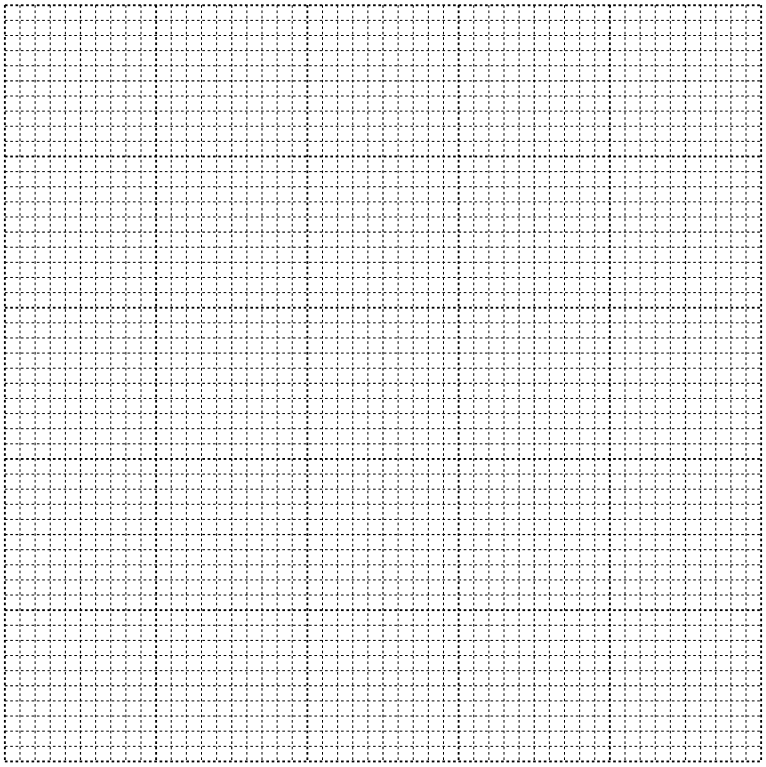

[4]

© UCLES 2015

(j) State whether your graph line shows that the angle α is directly proportional to the angle θ. Justify your statement by reference to your graph line.

statement .....

justification .....

.....

[2]

Tie your ray-trace sheet into this Booklet between pages 10 and 11. [3]

[Total: 10]

View solution

BLANK PAGE

© UCLES 2015

BLANK PAGE

Permission to reproduce items where third-party owned material protected by copyright is included has been sought and cleared where possible. Every reasonable effort has been made by the publisher (UCLES) to trace copyright holders, but if any items requiring clearance have unwittingly been included, the publisher will be pleased to make amends at the earliest possible opportunity.

To avoid the issue of disclosure of answer-related information to candidates, all copyright acknowledgements are reproduced online in the Cambridge International Examinations Copyright Acknowledgements Booklet. This is produced for each series of examinations and is freely available to download at www.cie.org.uk after the live examination series.

Cambridge International Examinations is part of the Cambridge Assessment Group. Cambridge Assessment is the brand name of University of Cambridge Local Examinations Syndicate (UCLES), which is itself a department of the University of Cambridge.

© UCLES 2015