Cambridge IGCSE

Cambridge International Examinations
Cambridge International General Certificate of Secondary Education

CANDIDATE NAME									
CENTRE NUMBER						CANDIDATE NUMBER				

PHYSICS **0625/53**

Paper 5 Practical Test **May/June 2015**

1 hour 15 minutes

Candidates answer on the Question Paper.

Additional Materials: As listed in the Confidential Instructions.

READ THESE INSTRUCTIONS FIRST

Write your Centre number, candidate number and name in the spaces at the top of the page.
Write in dark blue or black pen.
You may use an HB pencil for any diagrams or graphs.
Do not use staples, paper clips, glue or correction fluid.
DO **NOT** WRITE IN ANY BARCODES.

Answer **all** questions.
Electronic calculators may be used.
You may lose marks if you do not show your working or if you do not use appropriate units.

At the end of the examination, fasten all your work securely together.
The number of marks is given in brackets [ ] at the end of each question or part question.

For Examiner's Use	
1	
2	
3	
4	
Total	

The syllabus is approved for use in England, Wales and Northern Ireland as a Cambridge International Level 1/Level 2 Certificate.

This document consists of **11** printed pages and **1** blank page.

© UCLES 2015

CAMBRIDGE International Examinations

1 In this experiment, you will determine the mass of an object using two strings.

The apparatus has been set up for you. **Do not change** the position of the rule or the distance between the stands. You are also provided with two loops of string labelled **P** and **Q**.

Carry out the following instructions, referring to Figs. 1.1 and 1.2.

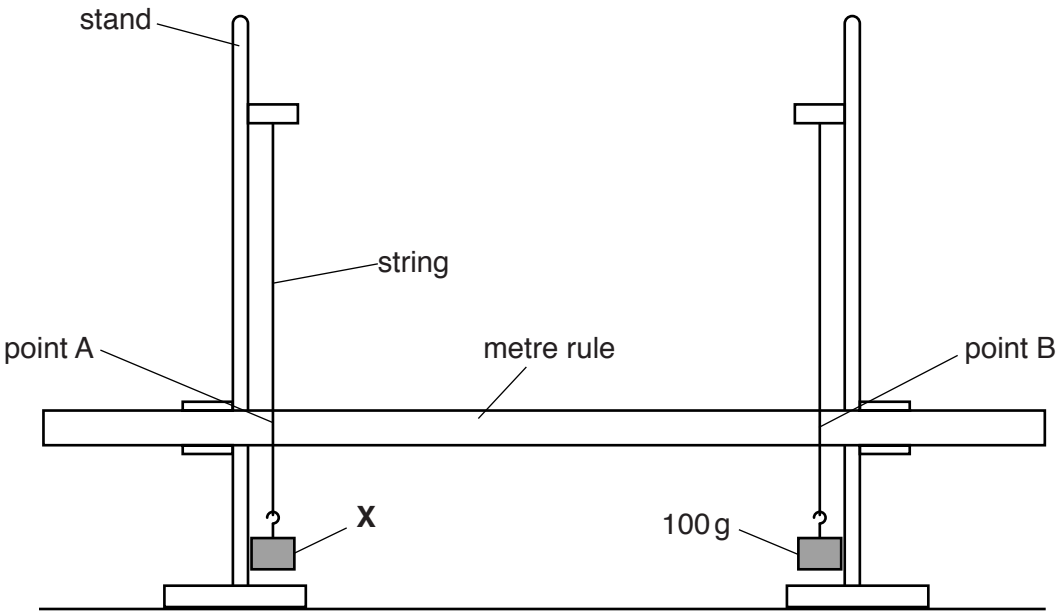

Fig. 1.1

View solution

(a) (i) Record the scale reading a_0 on the rule, at point A, where the string crosses the rule, as indicated in Fig. 1.1.

a_0 = ...

(ii) Record the scale reading b_0 at point B.

View solution

b_0 = ...

[2]

(b) Carefully place loop **P** around the vertical strings so that the strings are pulled closer together as shown in Fig. 1.2. The loop must be horizontal and should be just above the rule.

View solution

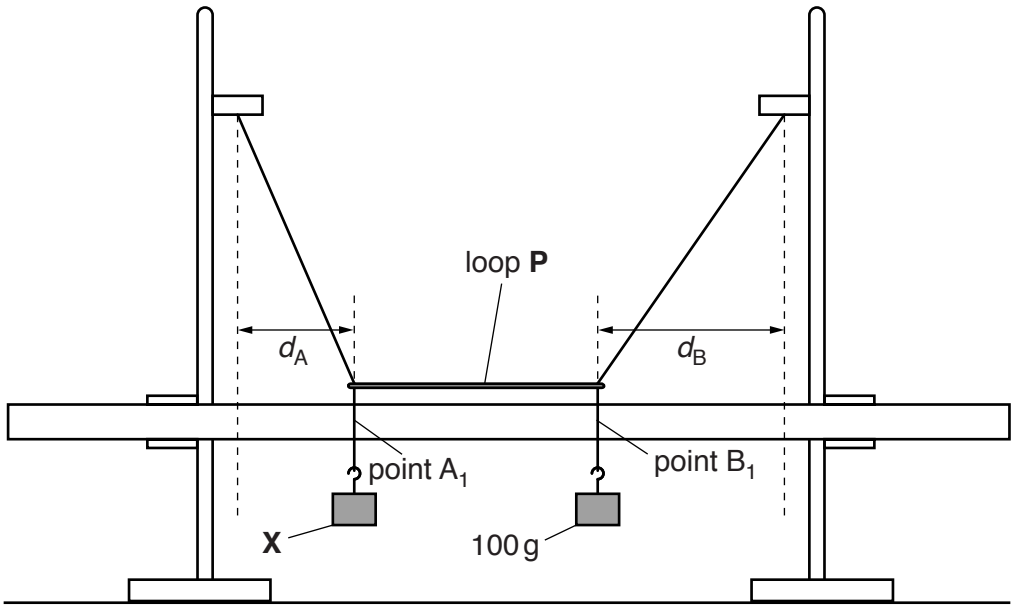

Fig. 1.2

(i) Record in Table 1.1 the scale reading a_1 at point A_1, as indicated in Fig. 1.2.

(ii) Record in Table 1.1 the scale reading b_1 at point B_1.

Table 1.1

loop	a_1 / cm	b_1 / cm	d_A / cm	d_B / cm	M / g
P					
Q					

(iii) Calculate and record in the table the distance d_A, as indicated in Fig. 1.2. Use your results from **(a)(i)** and from the table. d_A is the difference between a_0 and a_1.

(iv) Calculate and record the distance d_B. Use your results from **(a)(ii)** and from the table. d_B is the difference between b_0 and b_1.

(v) Calculate and record in the table a value for the mass M of object **X**, using your results from the table and the equation $M = \frac{k\, d_B}{d_A}$, where $k = 100\,\text{g}$.

(vi) Remove loop **P** from the vertical strings and replace it with loop **Q**.

(vii) Repeat steps **(b)(i)** to **(b)(v)** for loop **Q**.

[5]

© UCLES 2015

(c) Explain how you made sure that the loops were horizontal. You may draw a diagram.

View solution

.....

.....

.....

.....[1]

(d) A student suggests that d_A and d_B might be directly proportional to each other.

View solution

Briefly describe how this experiment could be extended to investigate the suggestion.

.....

.....

.....[2]

[Total: 10]

BLANK PAGE

© UCLES 2015

2 In this experiment, you will investigate the cooling of water.

Carry out the following instructions, referring to Fig. 2.1.

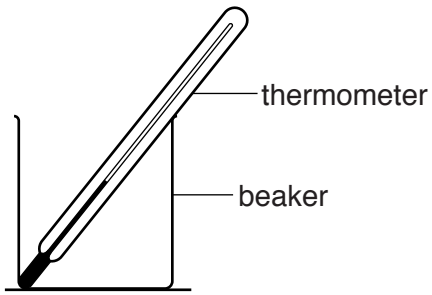

Fig. 2.1

(a) (i) Pour approximately 100 cm^3 of hot water into the beaker.

View solution

(ii) Read the temperature of the hot water and immediately start the stopclock.

In the first row of Table 2.1, record this temperature θ.

View solution

(iii) Record in the table, the temperature θ of the water at times t = 30 s, 60 s, 90 s, 120 s, 150 s, 180 s, 210 s, 240 s and 270 s.

View solution

Table 2.1

t/s	θ/°C
0	

[2]

(b) **(i)** Calculate the average cooling rate x_1 for the first 90 s of the experiment. Use your readings from the table and the equation $x_1 = \frac{(\theta_0 - \theta_{90})}{T}$, where $T = 90$ s and θ_0 and θ_{90} are the temperatures at 0 s and 90 s. Give the unit for the cooling rate.

View solution

x_1 = ...[2]

(ii) Calculate the average cooling rate x_2 in the next 90 s of the experiment. Use your readings from the table and the equation $x_2 = \frac{(\theta_{90} - \theta_{180})}{T}$, where $T = 90$ s and θ_{90} and θ_{180} are the temperatures at 90 s and 180 s.

View solution

x_2 = ...[1]

(iii) Calculate the average cooling rate x_3 in the last 90 s of the experiment. Use your readings from the table and the equation $x_3 = \frac{(\theta_{180} - \theta_{270})}{T}$, where $T = 90$ s and θ_{180} and θ_{270} are the temperatures at 180 s and 270 s.

View solution

x_3 = ...[1]

(c) Use your results from **(b)** to predict the average cooling rate x_4 for the next 90 s, if the experiment had been carried on for a longer time. Justify your prediction by reference to your results.

View solution

prediction for x_4 = ...

justification .....

.....

.....

[2]

(d) State **one** precaution which you took to ensure that the temperature readings were as reliable as possible.

.....

.....[1]

(e) A student wishes to find out if a similar pattern of results might be obtained under different conditions.

State a variable which he could change in your experiment to explore this.

View solution

.....[1]

[Total: 10]

© UCLES 2015

3 In this experiment, you will determine the resistance per unit length of a wire.

The circuit has been set up for you as shown in Fig. 3.1.

Carry out the following instructions, referring to Fig. 3.1.

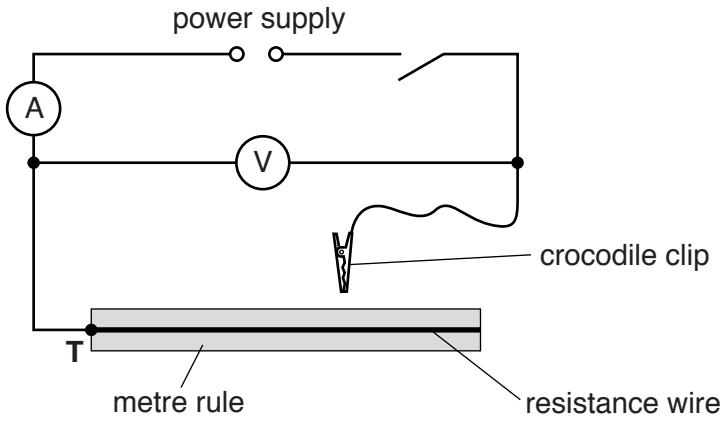

Fig. 3.1

View solution

(a) (i) Connect the crocodile clip to a length l of the resistance wire where $l = 0.900\,\text{m}$ measured from the end **T**.

Switch on. Measure, and record in Table 3.1, the potential difference V and the current I. Switch off.

View solution

(ii) Repeat **(a)(i)** for $l = 0.800\,\text{m}$, $0.700\,\text{m}$, $0.600\,\text{m}$ and $0.500\,\text{m}$.

Table 3.1

l/m	V/V	I/A	R/Ω
0.900			
0.800			
0.700			
0.600			
0.500			

[2]

(b) Calculate, and record in the table, the resistance R of each length of the wire, using the equation $R = \frac{V}{I}$. [1]

View solution

(c) Plot a graph of R/Ω (y-axis) against l/m (x-axis).

View solution

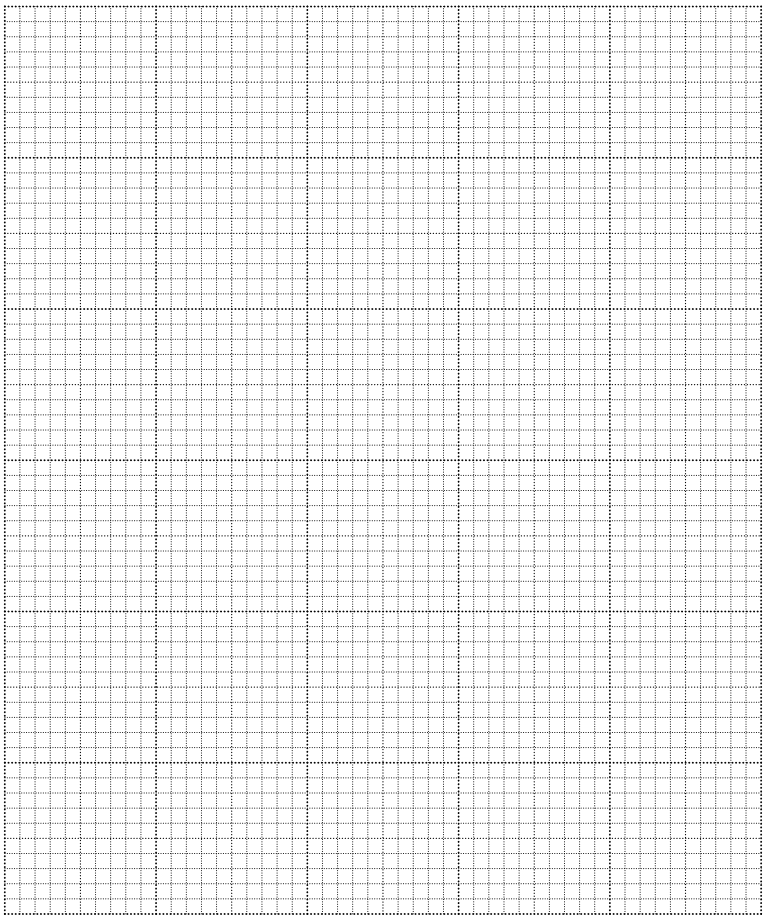

[4]

(d) **(i)** Determine the gradient G of the graph. Show clearly on the graph how you obtained the necessary information.

View solution

$G =$ .....[1]

(ii) For this experiment and wire, the resistance per unit length r of the wire is numerically equal to G.

Give a value for r, to a suitable number of significant figures for this experiment. Include the unit.

$r =$ .....[2]

[Total: 10]

4 In this experiment, you will determine the focal length of a converging lens by two methods.

Carry out the following instructions, referring to Figs. 4.1 and 4.2.

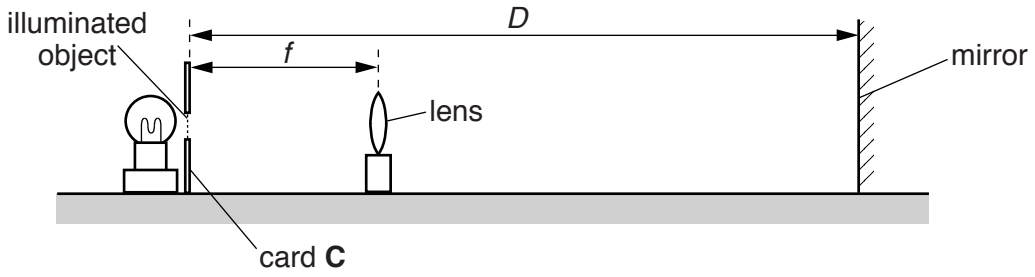

Fig. 4.1

(a) (i) Arrange the illuminated object, lens and mirror as shown in Fig. 4.1. Set the distance *D* between the mirror and the illuminated object to 20 cm.

(ii) Move the lens until a sharp image appears on the front of the card **C** by the side of the illuminated object.

(iii) Measure, and record in Table 4.1, the distance *f* between the lens and the illuminated object. *f* is a value for the focal length of the lens in this experiment.

View solution

Table 4.1

D/cm	*f*/cm
20	
40	

[1]

(b) (i) Repeat steps **(a)(i)** to **(a)(iii)** for a distance *D* = 40 cm.

View solution

(ii) Use your results from the table to calculate F_1, an average value for *f*.

View solution

F_1 = ...[1]

(c) (i) Set up the lens, illuminated object and screen as shown in Fig. 4.2.

View solution

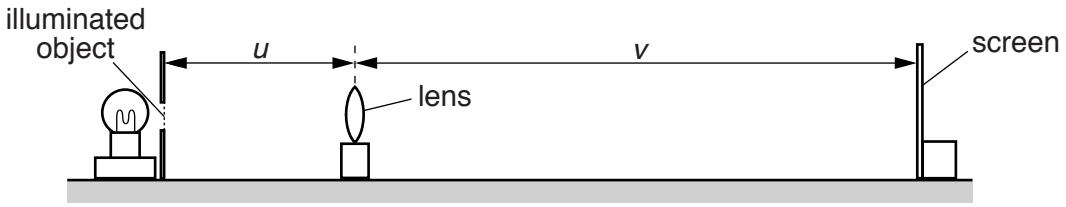

Fig. 4.2

(ii) Set the distance *u* between the illuminated object and the lens to 20.0 cm.

(iii) Move the screen until a sharp image of the illuminated object appears on the screen.

(iv) Measure, and record in Table 4.2, the distance *v* between the lens and the screen.

Table 4.2

u/cm	*v*/cm	*f*/cm
20.0		
30.0		

[3]

(v) Repeat steps **(c)(ii)** to **(c)(iv)** for a value of $u = 30.0$ cm.

(vi) For each value of *u*, calculate and record in the table the focal length *f*, using your results from the table and the equation $f = \frac{uv}{(u + v)}$.

(d) (i) Use your results from Table 4.2 to calculate F_2, a second average value for *f*.

View solution

$F_2 =$ .....[1]

(ii) A student suggests that F_1 and F_2 should be equal.

View solution

State whether your findings support this suggestion. Justify your statement by reference to your results.

statement .....

justification .....

.....

[2]

(e) Describe two precautions you took in order to obtain reliable results in this experiment.

1. .....

.....

2. .....

.....

[2]

[Total: 10]

View solution

Permission to reproduce items where third-party owned material protected by copyright is included has been sought and cleared where possible. Every reasonable effort has been made by the publisher (UCLES) to trace copyright holders, but if any items requiring clearance have unwittingly been included, the publisher will be pleased to make amends at the earliest possible opportunity.

To avoid the issue of disclosure of answer-related information to candidates, all copyright acknowledgements are reproduced online in the Cambridge International Examinations Copyright Acknowledgements Booklet. This is produced for each series of examinations and is freely available to download at www.cie.org.uk after the live examination series.

Cambridge International Examinations is part of the Cambridge Assessment Group. Cambridge Assessment is the brand name of University of Cambridge Local Examinations Syndicate (UCLES), which is itself a department of the University of Cambridge.

© UCLES 2015