Cambridge International Examinations
Cambridge International General Certificate of Secondary Education

CANDIDATE NAME									
CENTRE NUMBER						CANDIDATE NUMBER			

PHYSICS **0625/61**

Paper 6 Alternative to Practical **May/June 2015**

1 hour

Candidates answer on the Question Paper.

No Additional Materials are required.

READ THESE INSTRUCTIONS FIRST

Write your Centre number, candidate number and name on all the work you hand in.
Write in dark blue or black pen.
You may use an HB pencil for any diagrams or graphs.
Do not use staples, paper clips, glue or correction fluid.
DO **NOT** WRITE IN ANY BARCODES.

Answer **all** questions.
Electronic calculators may be used.
You may lose marks if you do not show your working or if you do not use appropriate units.

At the end of the examination, fasten all your work securely together.
The number of marks is given in brackets [ ] at the end of each question or part question.

The syllabus is approved for use in England, Wales and Northern Ireland as a Cambridge International Level 1/Level 2 Certificate.

This document consists of **13** printed pages and **3** blank pages.

© UCLES 2015

CAMBRIDGE International Examinations

1 The class is determining the weight of a metre rule using a balancing method.

The apparatus is shown in Fig. 1.1.

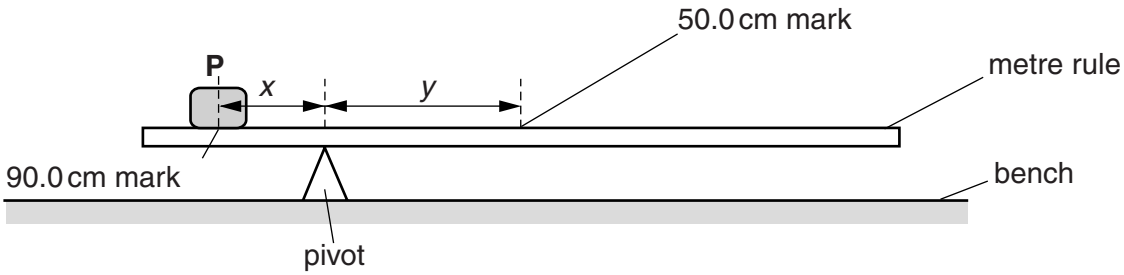

Fig. 1.1

(a) A student places a load **P** at the 90.0 cm mark on a metre rule and then balances the rule on a pivot.

(i) On Fig. 1.1, measure the distance *x* from the 90.0 cm mark to the pivot.

View solution

x = ...[1]

(ii) On Fig. 1.1, measure the distance *y* from the pivot to the centre of the rule.

View solution

y = ...[1]

(b) Fig. 1.1 is drawn one tenth of actual size.

View solution

(i) Calculate the actual distance *X* from the 90.0 cm mark to the pivot.

X = ...

(ii) Calculate the actual distance *Y* from the pivot to the centre of the rule.

View solution

Y = ...

[1]

(iii) Determine a value W_1 for the weight of the metre rule using the equation $W_1 = \frac{PX}{Y}$, where $P = 2.0$ N. *P* is the weight of the load **P**.

View solution

W_1 = ...[1]

(c) The student keeps the pivot at the same position and moves load **P** to the 95.0 cm mark. He places a load **Q** of weight $Q = 1.0\,\text{N}$, on the metre rule. He adjusts its position so that the rule balances.

On Fig. 1.2 mark, with a letter Z, the approximate position of the load **Q**. You do not need to carry out a detailed calculation.

View solution

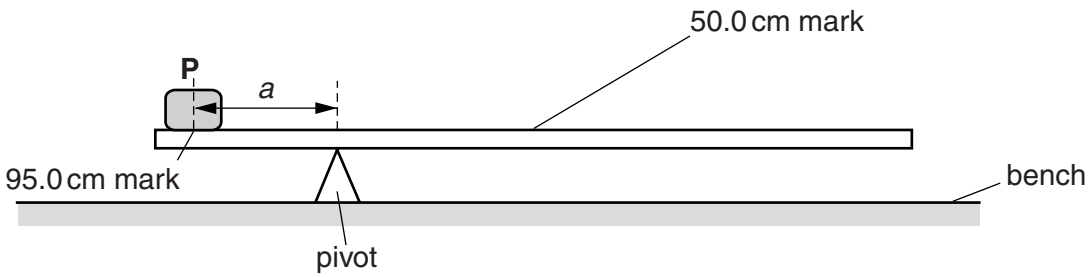

Fig. 1.2

[1]

(d) The student uses the values of **P** and **Q** and their distances from the pivot to calculate a second value W_2 for the weight of the rule.

W_2 = 1.12 N

The student expects W_1 and W_2 to be the same.

View solution

State whether the results support his idea. Justify your answer by reference to the results.

statement .....

justification .....

.....

.....

[2]

(e) Suggest one practical reason why it is difficult to obtain exact results with this experiment.

View solution

.....

.....[1]

[Total: 8]

© UCLES 2015

2 The class is investigating the cooling of water.

Fig. 2.1 shows some of the apparatus used.

(a) A student measures the initial temperature of hot water in a beaker, as indicated by the thermometer in Fig. 2.1.

View solution

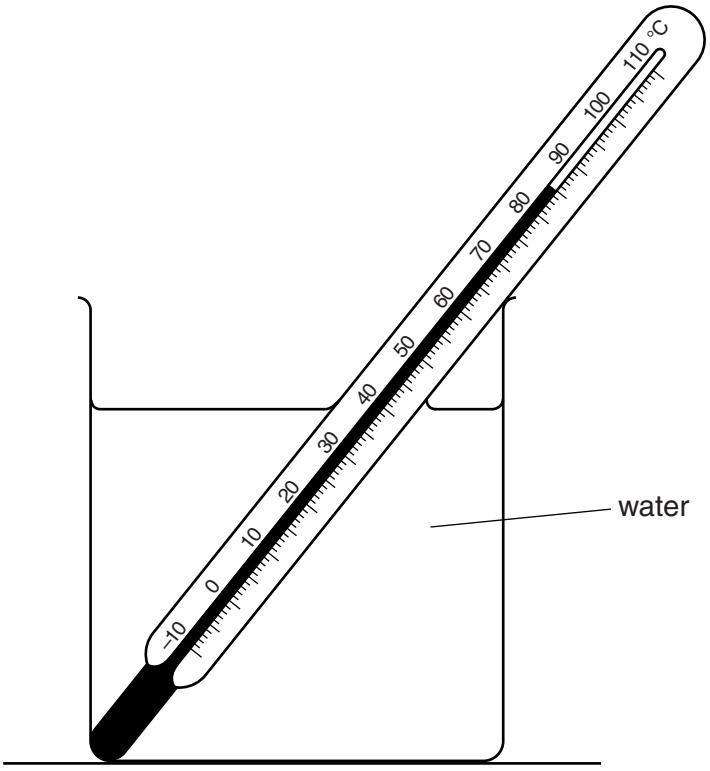

Fig. 2.1

Record this initial temperature in the first row of Table 2.1.

(b) The student allows the water in the beaker to cool and records the temperature at 30 s intervals. The readings are shown in the table.

Complete the column headings in the table.

View solution

Table 2.1

t/	θ/
0	
30	72
60	64
90	60
120	57
150	56

[2]

© UCLES 2015

(c) Plot a graph of θ/°C (y-axis) against t/s (x-axis).

View solution

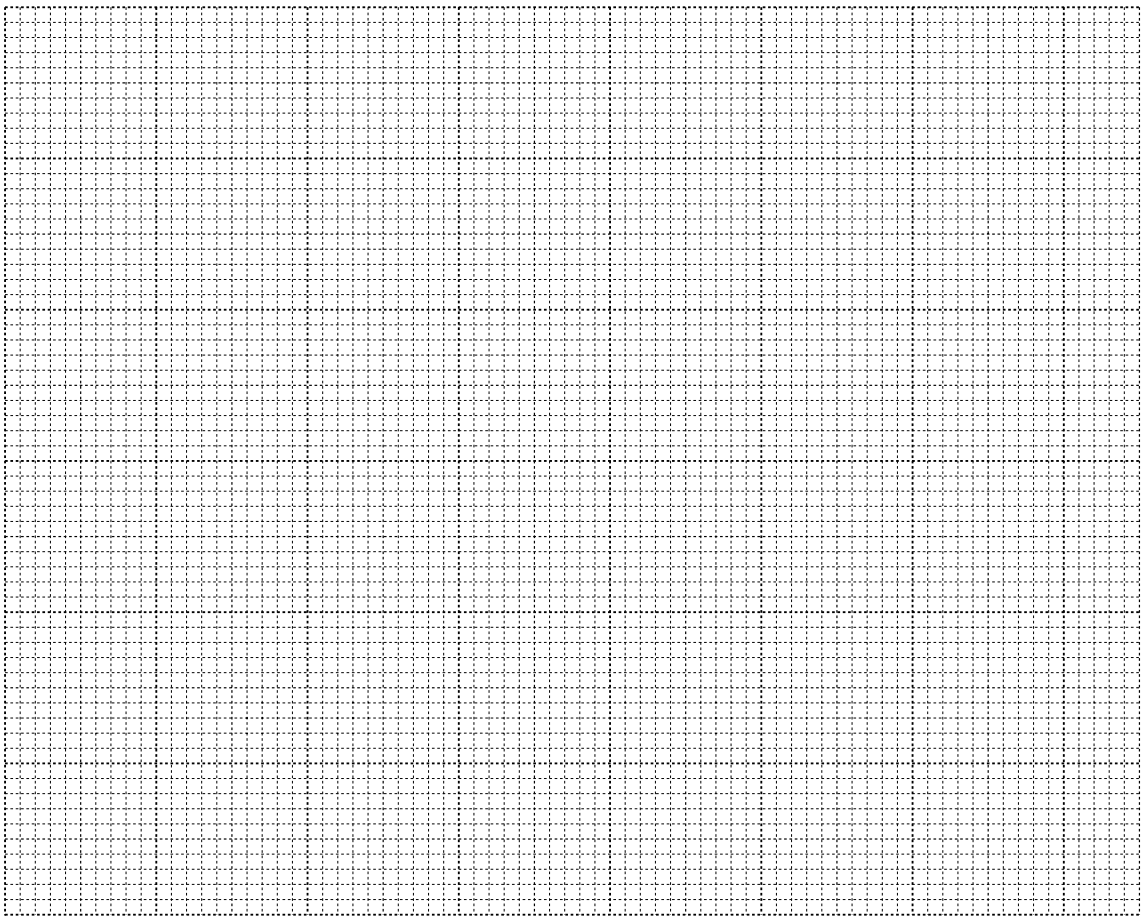

[5]

(d) **(i)** State whether the rate of cooling of the water in the beaker increases, decreases or stays approximately constant during the period of cooling.

The rate of cooling of the water ..... .[1]

(ii) Justify your statement by reference to the graph.

View solution

.....

.....

.....[1]

[Total: 9]

© UCLES 2015

3 The class is investigating the resistance of lamp filaments in series and parallel circuits.

Fig. 3.1 shows the first circuit used.

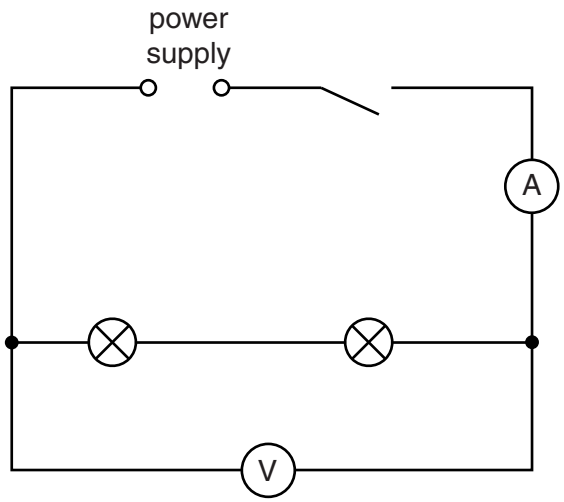

Fig. 3.1

(a) (i) Write down the readings shown on the meters in Figs. 3.2 and 3.3.

View solution

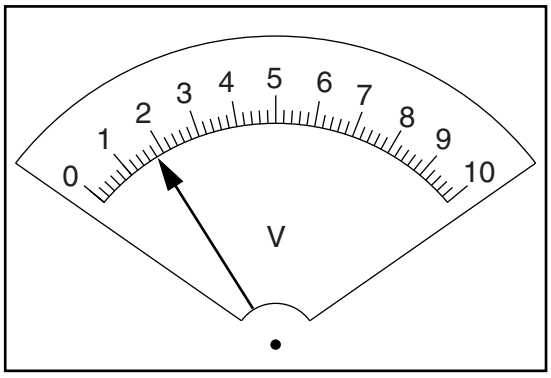

V_S = ...

Fig. 3.2

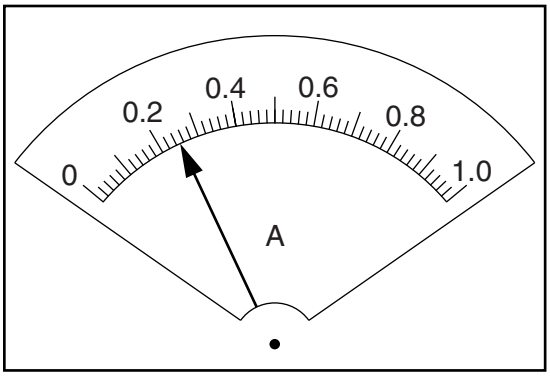

I_S = ...
[2]

Fig. 3.3

(ii) Calculate the resistance R_S of the lamp filaments using the equation $R_S = \frac{V_S}{I_S}$.

View solution

R_S = ...[1]

(b) The student rearranges the circuit so that
- the lamps are in parallel
- the ammeter will measure the total current in the circuit
- the voltmeter will measure the potential difference across the lamps.

View solution

(i) Draw a diagram of this circuit using standard circuit symbols.

[2]

(ii) The student measures the potential difference V_P across the lamps and the current I_P in the circuit.

V_P = 2.0 V

I_P = 0.60 A

Calculate the resistance R_P of the lamp filaments using the equation $R_P = \frac{V_P}{I_P}$.

View solution

R_P = ...

(iii) Calculate the ratio $\frac{R_S}{R_P}$.

View solution

$\frac{R_S}{R_P}$ = ...

[1]

(c) A student wishes to investigate whether the ratio $\frac{R_S}{R_P}$ for the two lamps is the same under all conditions.

(i) Suggest a variable that you could change in order to obtain further sets of readings.

View solution

.....

(ii) Explain briefly how you would change this variable.

View solution

.....

.....

[2]

[Total: 8]

BLANK PAGE

© UCLES 2015

4 The class is investigating the refraction of light passing through a transparent block.

Fig. 4.1 shows a student's ray-trace sheet.

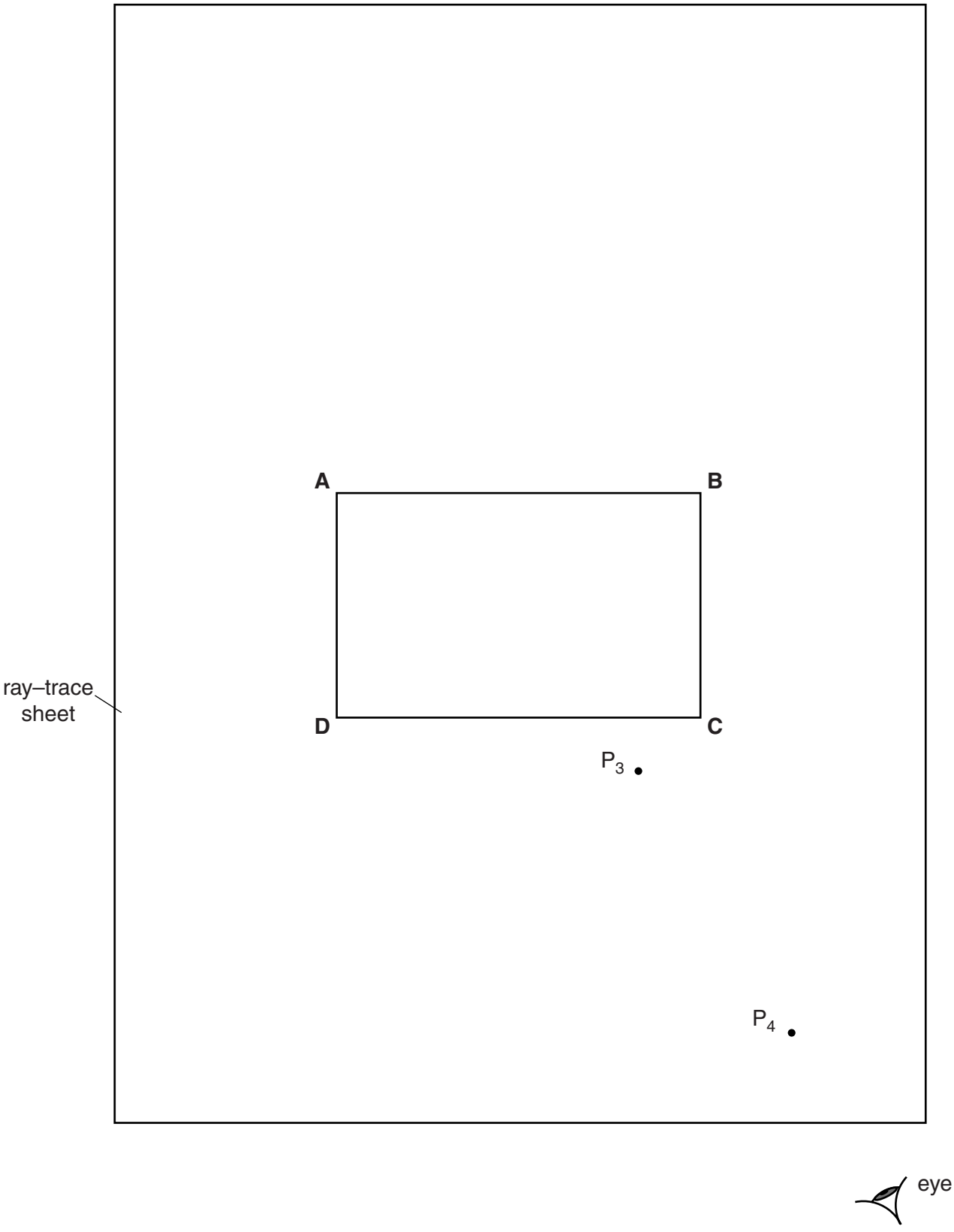

Fig. 4.1

© UCLES 2015

A student draws the outline **ABCD** of a transparent block.

(a) (i) Draw a normal **NL** at the centre of side **AB**. Label the point **E** where the normal crosses **AB**. Label the point **M** where the normal crosses **CD**.

(ii) Draw a line **GH**, parallel to **AB** and 6.0 cm above **AB**. Label the point **J** where the normal crosses **GH**.

(iii) Draw a line, starting at **E**, to the left of the normal and at an angle of incidence $i = 30°$ to the normal. Label the point **F** where the line meets **GH**.

View solution [3]

(b) The student places two pins P_1 and P_2 on the line **FE**.

On Fig. 4.1, label suitable positions for pins P_1 and P_2. [1]

(c) The student observes the images of P_1 and P_2 through side **CD** of the block so that the images of P_1 and P_2 appear one behind the other.

She places two pins P_3 and P_4 between her eye and the block so that P_3 and P_4, and the images of P_1 and P_2 seen through the block, appear one behind the other. The positions of P_3 and P_4 are shown on Fig. 4.1.

(i) Draw a line joining the positions of P_3 and P_4. Continue the line until it meets **CD** and label this point **K**.

View solution

(ii) Draw the line **KE**.

[1]

(d) (i) Measure and record the length *a* between points **F** and **J**.

View solution

a = ...

(ii) Measure and record the length *b* between points **F** and **E**.

View solution

b = ...

(iii) Measure and record the length *c* between points **E** and **K**.

View solution

c = ...

(iv) Measure and record the length *d* between points **M** and **K**.

View solution

d = ...

[1]

(v) Calculate *n*, the refractive index of the material of the block, using the equation $n = \frac{ac}{bd}$.

View solution

n = ...[1]

© UCLES 2015

(e) Suggest one precaution that you would take with this experiment to obtain reliable results.

.....

.....

.....[1]

(f) Fig. 4.2 shows a ray box.

View solution

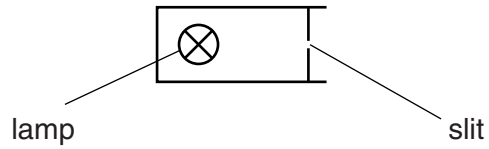

Fig. 4.2

This experiment can be carried out using a ray box instead of the pins.

On Fig. 4.1, draw a ray box in a suitable position for this experiment. [1]

[Total: 9]

© UCLES 2015

BLANK PAGE

© UCLES 2015

5 The class is investigating the oscillations of a pendulum.

Figs. 5.1 and 5.2 show the apparatus.

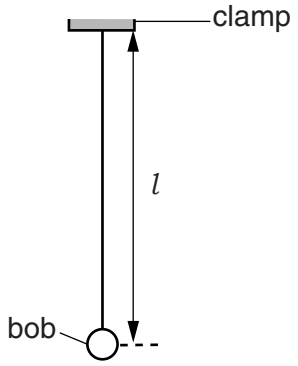

Fig. 5.1

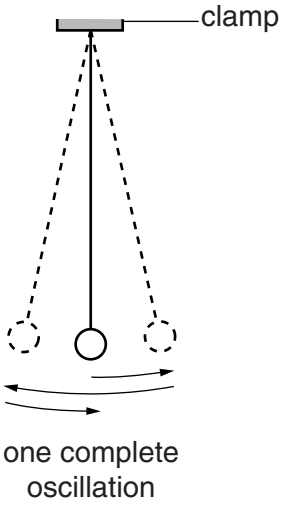

Fig. 5.2

A student measures the length l of the pendulum and takes readings of the time t for 20 complete oscillations. She calculates the period T of the pendulum. T is the time taken for one complete oscillation. She repeats the procedure for a range of lengths.

She plots a graph of T^2/s^2 against l/m. Fig. 5.3 shows the graph.

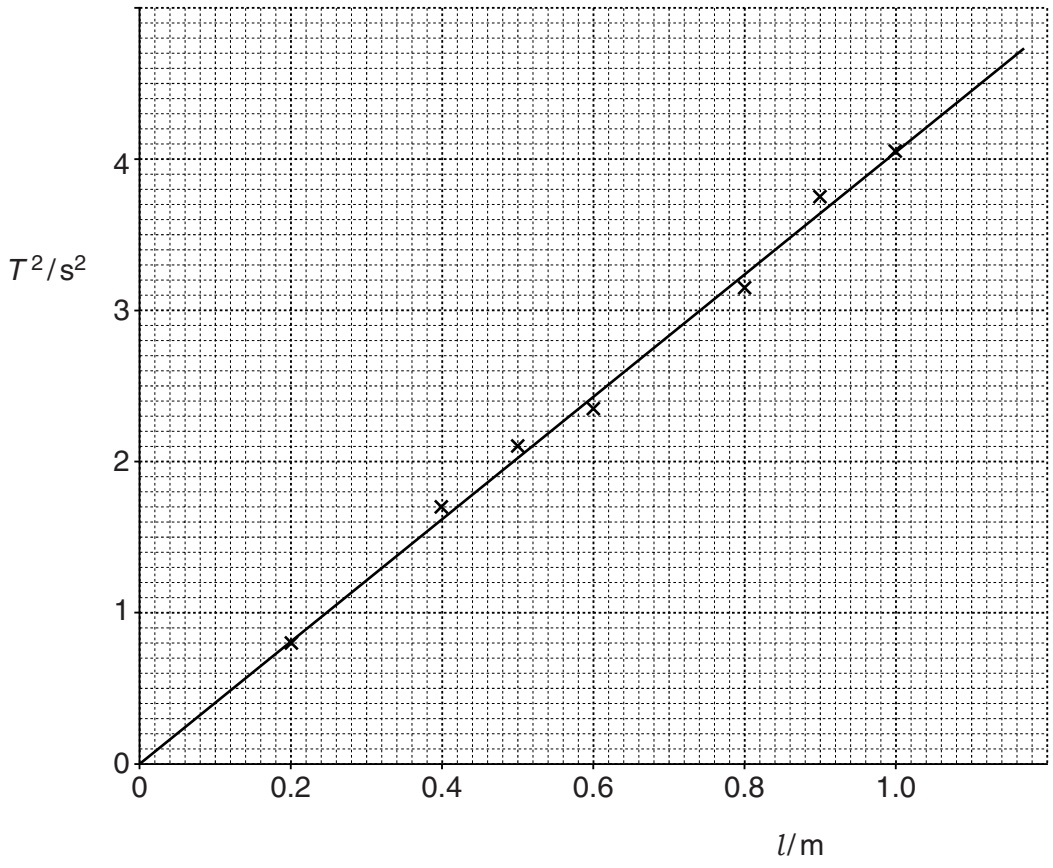

Fig. 5.3

(a) Using the graph, determine the length l of a pendulum that has a period T = 2.0 s. Show clearly on the graph how you obtained the necessary information.

View solution

l = ...[3]

(b) Explain why measuring the time for 20 swings, rather than for 1 swing, gives a more accurate value for T.

.....

.....[1]

(c) Another student investigates the effect that changing the mass m of the pendulum bob has on the period T of the pendulum.

(i) Suggest how many different masses the student should use for this laboratory experiment.

number of different masses = ...

(ii) Suggest a range of suitable values for the masses.

View solution

suitable range of masses = ...
[2]

[Total: 6]

© UCLES 2015

BLANK PAGE

Permission to reproduce items where third-party owned material protected by copyright is included has been sought and cleared where possible. Every reasonable effort has been made by the publisher (UCLES) to trace copyright holders, but if any items requiring clearance have unwittingly been included, the publisher will be pleased to make amends at the earliest possible opportunity.

To avoid the issue of disclosure of answer-related information to candidates, all copyright acknowledgements are reproduced online in the Cambridge International Examinations Copyright Acknowledgements Booklet. This is produced for each series of examinations and is freely available to download at www.cie.org.uk after the live examination series.

Cambridge International Examinations is part of the Cambridge Assessment Group. Cambridge Assessment is the brand name of University of Cambridge Local Examinations Syndicate (UCLES), which is itself a department of the University of Cambridge.