Cambridge IGCSE

Cambridge International Examinations
Cambridge International General Certificate of Secondary Education

CANDIDATE NAME									
CENTRE NUMBER						CANDIDATE NUMBER			

PHYSICS **0625/63**

Paper 6 Alternative to Practical **May/June 2015**

1 hour

Candidates answer on the Question Paper.

No Additional Materials are required.

READ THESE INSTRUCTIONS FIRST

Write your Centre number, candidate number and name on all the work you hand in.
Write in dark blue or black pen.
You may use an HB pencil for any diagrams or graphs.
Do not use staples, paper clips, glue or correction fluid.
DO **NOT** WRITE IN ANY BARCODES.

Answer **all** questions.
Electronic calculators may be used.
You may lose marks if you do not show your working or if you do not use appropriate units.

At the end of the examination, fasten all your work securely together.
The number of marks is given in brackets [ ] at the end of each question or part question.

The syllabus is approved for use in England, Wales and Northern Ireland as a Cambridge International Level 1/Level 2 Certificate.

This document consists of **13** printed pages and **3** blank pages.

© UCLES 2015

CAMBRIDGE International Examinations

1 The class is determining the mass of an object using two strings.

The apparatus is set up as shown in Fig. 1.1.

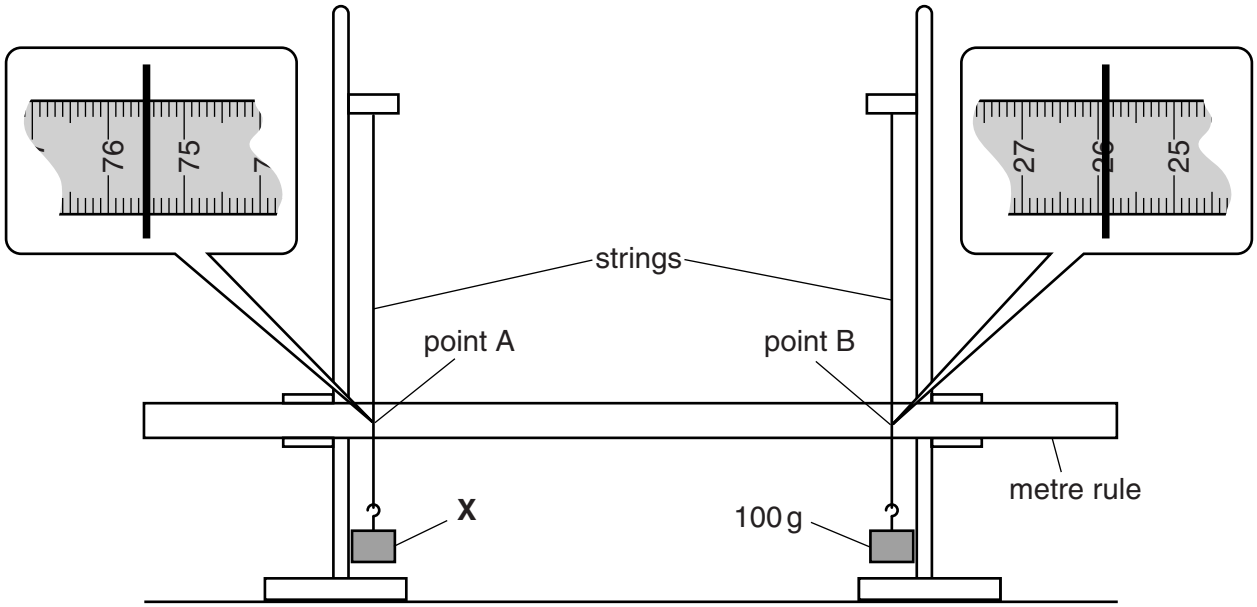

Fig. 1.1

View solution

(a) (i) Record the scale reading a_0 at point A, where the string crosses the rule, as indicated in the enlarged section of Fig. 1.1.

a_0 = ...

(ii) Record the scale reading b_0 at point B.

View solution

b_0 = ...

[2]

(b) A loop of string is placed around the vertical strings so that they are pulled closer together, as shown in Fig. 1.2. The loop is horizontal and is just above the rule.

View solution

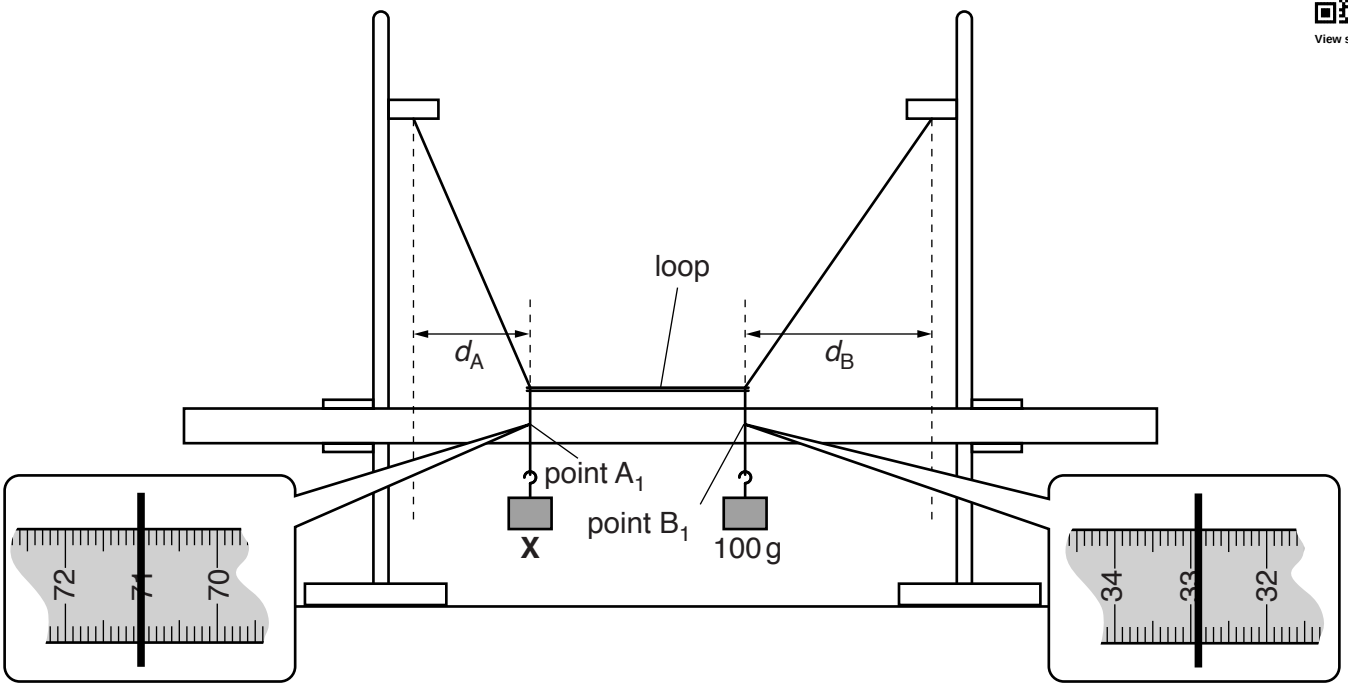

Fig. 1.2

(i) Record the scale reading a_1 at point A_1 as indicated in the enlarged section of Fig. 1.2.

a_1 = ...

(ii) Record the scale reading b_1 at point B_1.

b_1 = ...
[1]

(iii) Calculate and record the distance d_A, shown in Fig. 1.2. Use your results from **(a)(i)** and **(b)(i)**. d_A is the difference between a_0 and a_1.

d_A = ...

(iv) Calculate and record the distance d_B. Use your results from **(a)(ii)** and **(b)(ii)**. d_B is the difference between b_1 and b_0.

d_B = ...
[1]

(c) Calculate the mass M of object **X**, using your results from **(b)(iii)** and **(b)(iv)** and the equation $M = \frac{k\,d_B}{d_A}$ where $k = 100\,\text{g}$.

View solution

M = ...[2]

© UCLES 2015

(d) Explain how you could ensure that the loop is horizontal in **(b)**. You may draw a diagram.

View solution

.....

.....

.....[1]

(e) A student suggests that d_A and d_B might be directly proportional to each other.

View solution

Briefly describe how this experiment could be extended to investigate the suggestion.

.....

.....

.....[2]

[Total: 9]

2 A student is studying the cooling of water.

She is using the apparatus shown in Fig. 2.1.

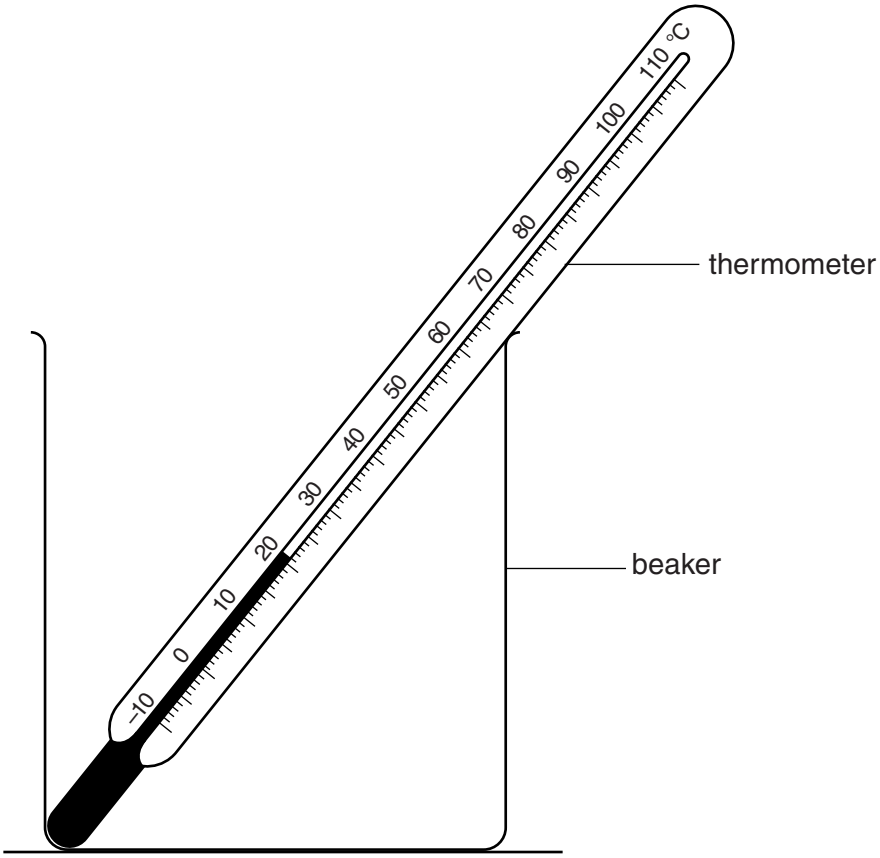

Fig. 2.1

(a) Record the room temperature θ_R as indicated by the thermometer in Fig. 2.1.

View solution

θ_R = ...[1]

(b) The student pours approximately 100 cm^3 of hot water into the beaker.

She reads the thermometer at the start of the experiment and again at times t = 30 s, 60 s, 90 s, 120 s, 150 s, 180 s, 210 s, 240 s and 270 s.


View solution

Her readings of the temperature θ are shown in Table 2.1.

Complete the table.

Table 2.1

t/s	θ/°C
0	85.0
	82.0
	80.0
	77.5
	75.5
	74.0
	72.0
	70.5
	69.0
	67.5

[1]

(c) **(i)** Calculate the average cooling rate x_1 for the first 90 s of the experiment. Use the readings from the table and the equation $x_1 = \frac{(\theta_0 - \theta_{90})}{T}$, where T = 90 s and θ_0 and θ_{90} are the temperatures at 0 s and 90 s. Give the unit for the cooling rate.


View solution

x_1 = ...[2]

(ii) Calculate the average cooling rate x_2 in the next 90 s of the experiment. Use the readings from the table and the equation $x_2 = \frac{(\theta_{90} - \theta_{180})}{T}$, where $T = 90$ s and θ_{90} and θ_{180} are the temperatures at 90 s and 180 s.

View solution

x_2 = ...

(iii) Calculate the average cooling rate x_3 in the last 90 s of the experiment. Use the readings from the table and the equation $x_3 = \frac{(\theta_{180} - \theta_{270})}{T}$, where $T = 90$ s and θ_{180} and θ_{270} are the temperatures at 180 s and 270 s.

View solution

x_3 = ...

[1]

(d) Use your results from **(c)** to predict the average cooling rate x_4 for the next 90 s, if the experiment had been carried on for a longer time. Justify your prediction by reference to your results.

View solution

prediction for x_4 = ...

justification .....

.....

.....

[2]

(e) State two precautions that you would take in this experiment to ensure that the temperature readings are as reliable as possible.

1. .....

.....

2. .....

.....

[2]

[Total: 9]

View solution

© UCLES 2015

3 Some students are determining the resistance per unit length of a wire.

They are using the circuit shown in Fig. 3.1.

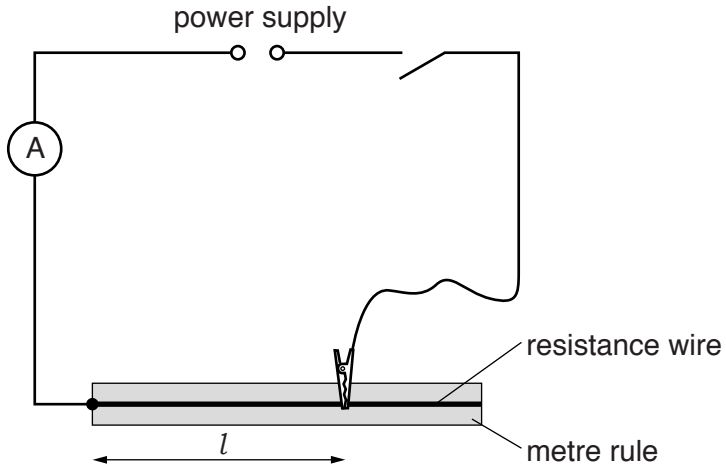

Fig. 3.1

View solution

The crocodile clip is connected to a length l of the wire and the current and potential difference are measured.

(a) On Fig. 3.1, draw the symbol for a voltmeter correctly connected to measure the potential difference across the selected length l of the resistance wire. [1]

(b) The potential difference V and current I for various lengths l of the wire are shown in Table 3.1.

View solution

Table 3.1

l/m	V/V	I/A	R/Ω
0.900	2.98	0.42	
0.800	2.86	0.46	
0.700	2.89	0.53	
0.600	2.82	0.60	
0.500	2.83	0.72	

For each value of l, calculate and record in the table the resistance R of the wire, using the equation $R = \frac{V}{I}$. [1]

© UCLES 2015

(c) Plot a graph of R/Ω (y-axis) against l/m (x-axis).

View solution

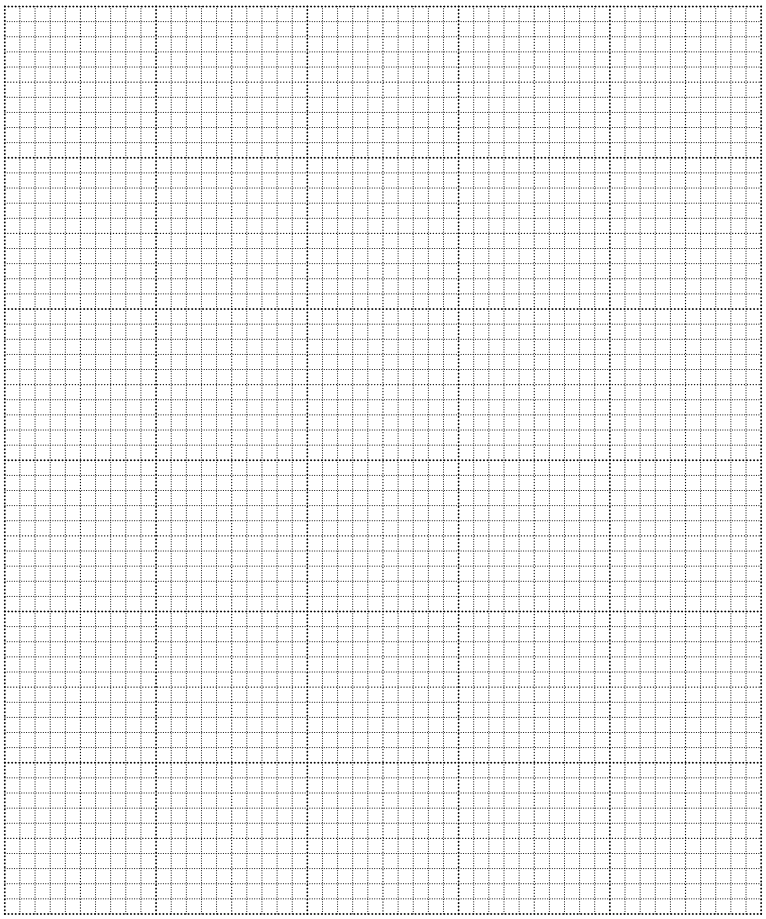

[4]

(d) (i) Determine the gradient G of the graph.

View solution

Show clearly on the graph how you obtained the necessary information.

$G =$ .....[1]

(ii) For this experiment and wire, the resistance per unit length r of the wire is numerically equal to G.

Give a value for r, to a suitable number of significant figures for this experiment. Include the unit.

$r =$ .....[2]

[Total: 9]

© UCLES 2015

4 A student is determining the focal length of a converging lens by two methods.

First, he uses the apparatus shown in Fig. 4.1.

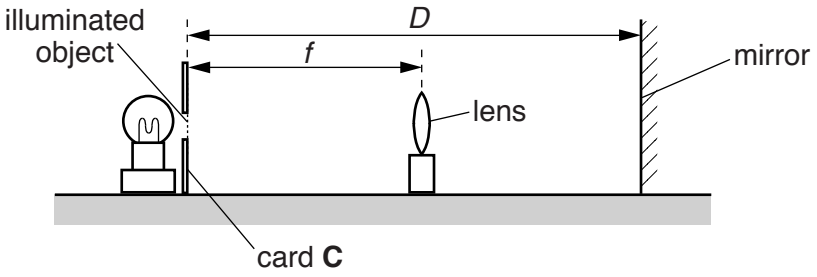

Fig. 4.1

(a) He sets the distance *D* between the mirror and the illuminated object to 30.0 cm.

View solution

He then moves the lens until a sharp image appears on card **C** by the side of the illuminated object.

(i) On Fig. 4.1, measure the distance *f* between the illuminated object and the lens.

f = ...[1]

(ii) Fig. 4.1 is drawn to 1/5th scale.

Calculate, and record in Table 4.1, the actual distance *F* between the illuminated object and the lens. *F* is a value for the focal length of the lens in this experiment.

View solution

Table 4.1

D/cm	*F*/cm
30.0	
50.0	15.7

[1]

(b) The student repeats the procedure for a distance *D* = 50.0 cm. His result is shown in the table.

Use the results from the table to calculate F_1, an average value of *F*.

View solution

F_1 = ...[1]

(c) The student arranges the lens, illuminated object and a screen as shown in Fig. 4.2.

View solution

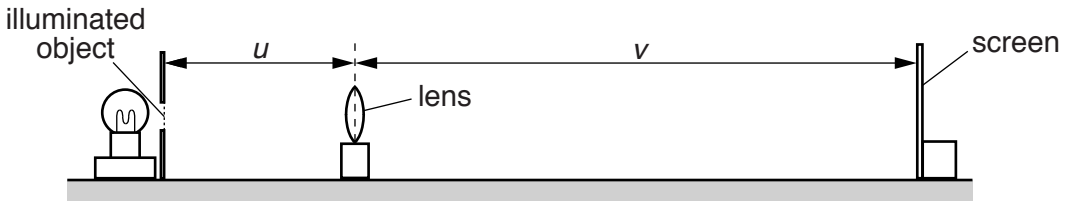

Fig. 4.2

He measures the distance *u* between the illuminated object and the lens.

He moves the screen until a sharp image of the illuminated object appears on the screen, and measures the distance *v* between the lens and the screen.

His readings are: $u =$ 20.0 cm

$v =$ 72.5 cm

(i) Calculate F_2, another value for the focal length of the lens, using the student's results and the equation $F_2 = \frac{uv}{(u + v)}$.

$F_2 =$ .....[1]

(ii) A student suggests that F_1 and F_2 should be equal.

View solution

State whether your findings support this idea. Justify your statement by reference to the results.

statement .....

justification .....

.....

[2]

(d) Describe a precaution that you would take in order to obtain reliable results in this experiment.

.....

.....[1]

[Total: 7]

View solution

5 A student is investigating the behaviour of a solar panel.

She is using the apparatus shown in Fig. 5.1.

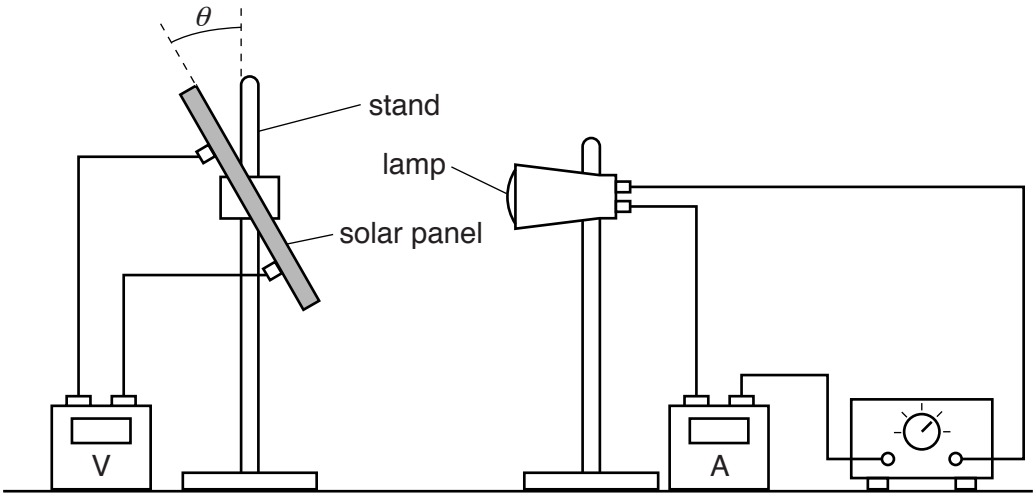

Fig. 5.1

She switches the lamp on. She changes the angle θ between the solar panel and the vertical and measures the voltage produced at each angle.

Figs. 5.2 and 5.3 show the solar panel at two different angles. The voltmeter readings for these angles are shown in Table 5.1.

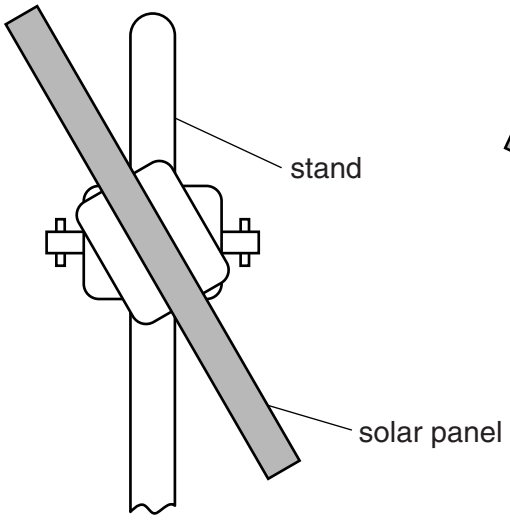

Fig. 5.2

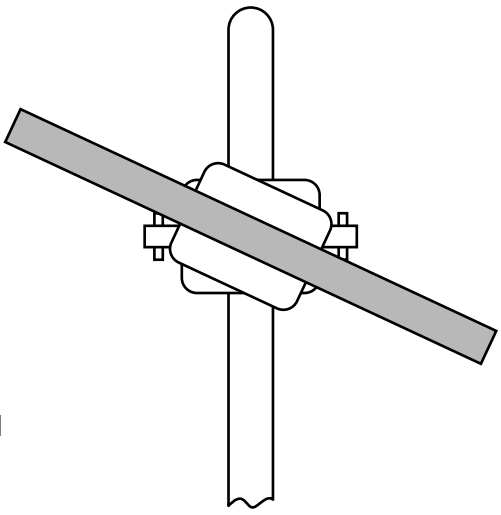

Fig. 5.3

(a) (i) Measure each value of the angle θ and record it in the table.

View solution

Table 5.1

	θ/°	V/V
Fig. 5.2		3.62
Fig. 5.3		2.50

[1]

(ii) Explain what practical steps should be taken to obtain accurate measurements of θ in the experiment. You may draw a diagram to show the procedure.

View solution

.....

.....

.....[1]

(b) The student finds that a reading of 0.63 V is obtained even when the lamp is switched off.

View solution

Suggest a reason for this and explain what she could do to overcome this problem.

reason .....

.....

solution .....

.....

[2]

(c) Suggest two aspects of the apparatus that should be kept constant in order to make the results of the experiment as reliable as possible.

1. .....

.....

2. .....

.....

View solution [2]

[Total: 6]

© UCLES 2015

BLANK PAGE

BLANK PAGE

© UCLES 2015

BLANK PAGE

Permission to reproduce items where third-party owned material protected by copyright is included has been sought and cleared where possible. Every reasonable effort has been made by the publisher (UCLES) to trace copyright holders, but if any items requiring clearance have unwittingly been included, the publisher will be pleased to make amends at the earliest possible opportunity.

To avoid the issue of disclosure of answer-related information to candidates, all copyright acknowledgements are reproduced online in the Cambridge International Examinations Copyright Acknowledgements Booklet. This is produced for each series of examinations and is freely available to download at www.cie.org.uk after the live examination series.

Cambridge International Examinations is part of the Cambridge Assessment Group. Cambridge Assessment is the brand name of University of Cambridge Local Examinations Syndicate (UCLES), which is itself a department of the University of Cambridge.