Cambridge International Examinations
Cambridge International General Certificate of Secondary Education

PHYSICS **0625/11**

Paper 1 Multiple Choice (Core) **May/June 2016**

45 minutes

Additional Materials: Multiple Choice Answer Sheet
Soft clean eraser
Soft pencil (type B or HB recommended)

READ THESE INSTRUCTIONS FIRST

Write in soft pencil.
Do not use staples, paper clips, glue or correction fluid.
Write your name, Centre number and candidate number on the Answer Sheet in the spaces provided unless this has been done for you.
DO **NOT** WRITE IN ANY BARCODES.

There are **forty** questions on this paper. Answer **all** questions. For each question there are four possible answers **A**, **B**, **C** and **D**.
Choose the **one** you consider correct and record your choice in **soft pencil** on the separate Answer Sheet.

Read the instructions on the Answer Sheet very carefully.

Each correct answer will score one mark. A mark will not be deducted for a wrong answer.
Any rough working should be done in this booklet.
Electronic calculators may be used.
Take the weight of 1.0 kg to be 10 N (acceleration of free fall = 10 m / s^2).

The syllabus is approved for use in England, Wales and Northern Ireland as a Cambridge International Level 1/Level 2 Certificate.

This document consists of **17** printed pages and **3** blank pages.

© UCLES 2016

CAMBRIDGE International Examinations

1 The diagram shows an enlarged drawing of the end of a metre rule. It is being used to measure the length of a small feather.

View solution

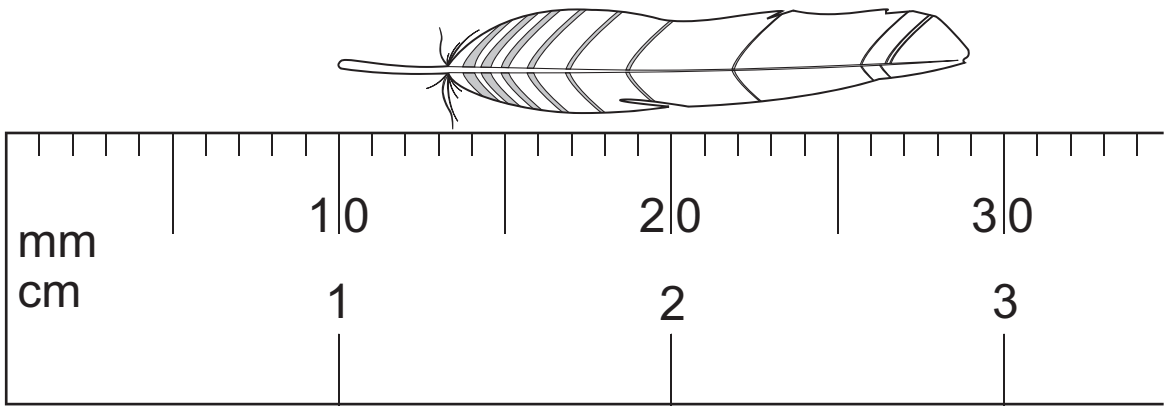

What is the length of the feather?

A 19 mm **B** 29 mm **C** 19 cm **D** 29 cm

View solution

2 A train begins a journey from a station and travels 60 km in a time of 20 minutes.

What is the average speed of the train?

A 3.0 m/s **B** 5.0 m/s **C** 50 m/s **D** 60 m/s

View solution

3 Two runners take part in a race.

The graph shows how the speed of each runner changes with time.

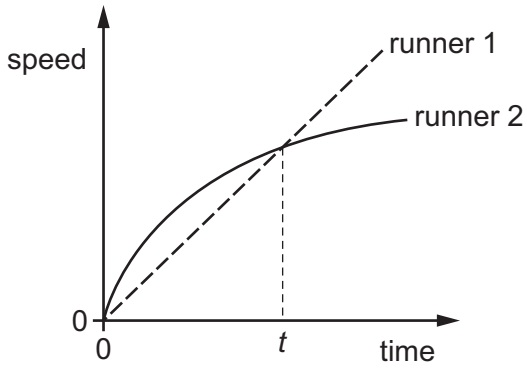

What does the graph show about the runners at time *t*?

A Both runners are moving at the same speed.

B Runner 1 has zero acceleration.

C Runner 1 is overtaking runner 2.

D Runner 2 is slowing down.

© UCLES 2016

4 A cup contains hot liquid.

View solution

Some of the liquid evaporates.

What happens to the mass and what happens to the weight of the liquid in the cup?

	mass	weight
A	decreases	decreases
B	decreases	stays the same
C	stays the same	decreases
D	stays the same	stays the same

5 An object has a mass of 50 kg.

View solution

The gravitational field strength on Earth is 10.0 N / kg.

The gravitational field strength on a distant planet is 4.0 N / kg.

What is the weight of the object on Earth, and what is its weight on the distant planet?

	on Earth	on the distant planet
A	5.0 kg	12.5 kg
B	5.0 N	12.5 N
C	500 kg	200 kg
D	500 N	200 N

© UCLES 2016

6 A student wishes to determine the density of an irregularly-shaped stone.

First he finds the mass of the stone. Next he lowers the stone into a measuring cylinder containing water.

View solution

The diagrams show the measuring cylinder before and after the stone is lowered into it.

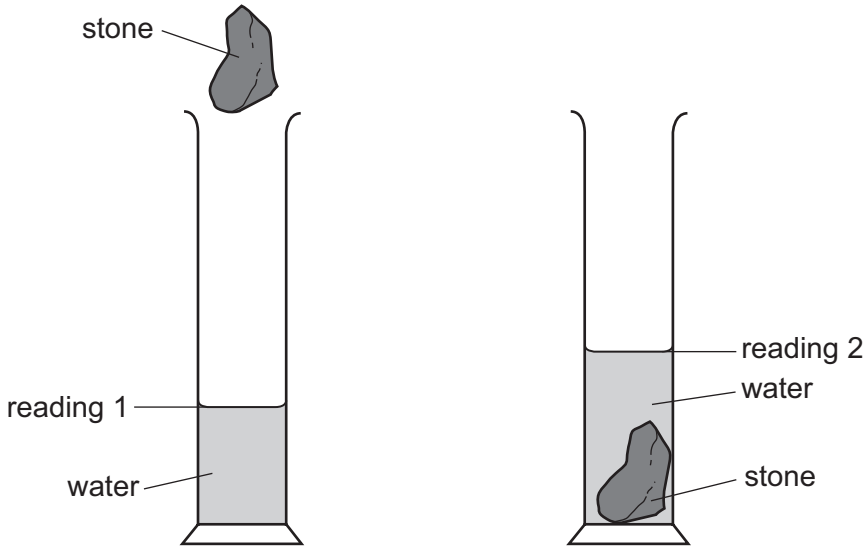

How should the student calculate the density of the stone?

A mass of stone × reading 2

B mass of stone × (reading 2 – reading 1)

C mass of stone ÷ reading 2

D mass of stone ÷ (reading 2 – reading 1)

View solution

7 Which is an example of a force?

A energy

B power

C pressure

D weight

8 The diagram shows an object of weight W and an object of weight Z balanced on a uniform metre rule.

View solution

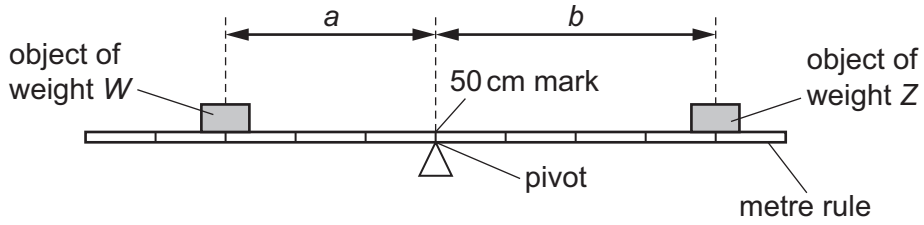

Which equation relating to W, Z, a and b is correct?

A $\frac{W}{a} = \frac{Z}{b}$

B $W \times Z = a \times b$

C $W \times a = Z \times b$

D $W \times (a + b) = Z$

9 A skier walks from the bottom of a ski slope to the top and gains 10 000 J of gravitational potential energy.

She skis down the slope. At the bottom of the slope, her kinetic energy is 2000 J.

View solution

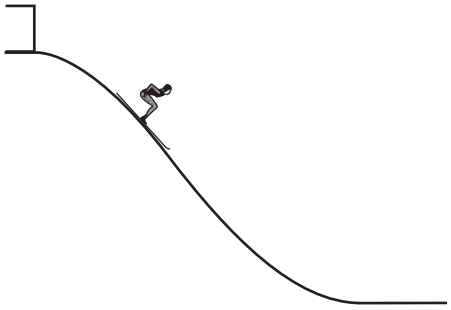

How much energy is dissipated in overcoming friction and air resistance as the skier moves down the slope?

A 2000 J **B** 8000 J **C** 10 000 J **D** 12 000 J

10 A coal-fired power station generates electricity. Coal is burnt and the energy released is used to boil water. The steam from the water makes the generator move and this produces electricity.

Which words are used to describe the energy stored in the coal and the energy of the moving generator?

View solution

	coal	generator
A	chemical	hydroelectric
B	chemical	kinetic
C	geothermal	hydroelectric
D	geothermal	kinetic

View solution

11 Four different children run up the same set of stairs.

For which child is the useful power to climb the stairs the greatest?

	mass of child / kg	time taken / s
A	40	15
B	50	25
C	60	25
D	70	15

12 The diagram shows three vases each with the same base area. Each vase contains water of the same depth.

View solution

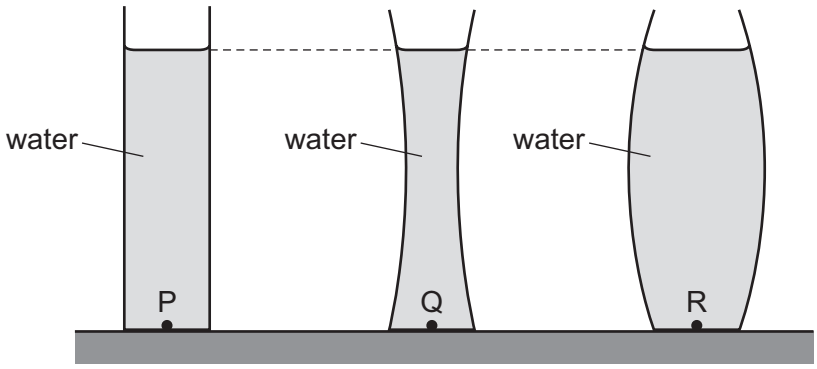

Which statement about the water pressures at points P, Q and R is correct?

A The pressure at point P is the greatest.

B The pressure at point Q is the least.

C The pressure at point R is the greatest.

D The pressures at points P, Q and R are the same.

13 The diagram shows a simple mercury barometer.

View solution

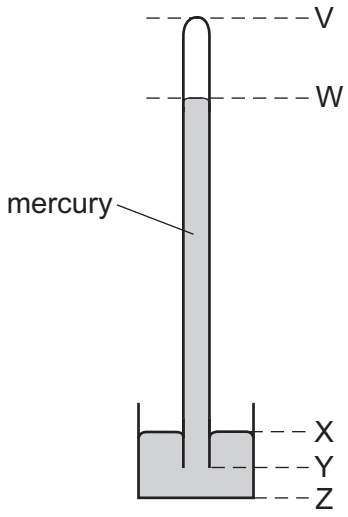

The atmospheric pressure increases.

Which distance increases?

A VW **B** WY **C** XY **D** XZ

View solution

14 Which statement about evaporation is correct?

A Evaporation causes the temperature of the remaining liquid to decrease.

B Evaporation does not occur from a cold liquid near its freezing point.

C Evaporation does not occur from a dense liquid, such as mercury.

D Evaporation occurs from all parts of a liquid.

15 A gas is stored in a sealed container of constant volume. The temperature of the gas increases. This causes the pressure of the gas to increase.

View solution

What happens to the gas molecules during this pressure increase?

A The average kinetic energy of the molecules increases.

B The average separation of the molecules decreases.

C The average separation of the molecules increases.

D The volume of each molecule increases.

© UCLES 2016

16 A substance loses thermal energy (heat) to the surroundings at a steady rate.

View solution

The graph shows how the temperature of the substance changes with time.

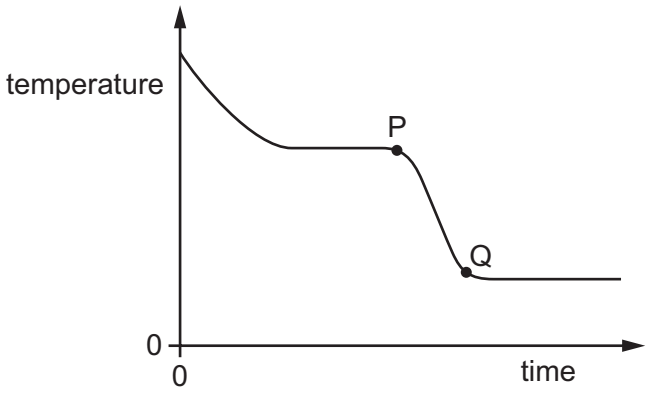

What could the portion PQ of the graph represent?

A gas condensing

B gas cooling

C liquid cooling

D liquid solidifying

17 A student wishes to check the upper and the lower fixed points on a Celsius scale thermometer.

View solution

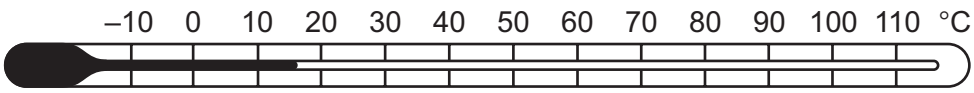

She has four beakers P, Q, R and S.

Beaker P contains a mixture of ice and salt.

Beaker Q contains a mixture of ice and water.

Beaker R contains boiling salt solution.

Beaker S contains boiling water.

Which two beakers should she use to check the fixed points?

A P and R **B** P and S **C** Q and R **D** Q and S

© UCLES 2016

18 The same quantity of thermal energy is supplied to two solid objects X and Y. The temperature increase of object X is greater than the temperature increase of object Y.

View solution

Which statement explains this?

A X has a lower melting point than Y.

B X has a lower density than Y.

C X has a lower thermal capacity than Y.

D X is a better thermal conductor than Y.

19 A liquid is heated in a beaker.

View solution

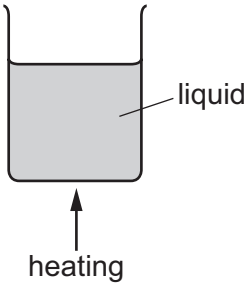

The density of the liquid changes as its temperature increases. This causes energy to be transferred throughout the liquid.

How does the density change and what is this energy transfer process?

	density	energy transfer process
A	decreases	conduction
B	decreases	convection
C	increases	conduction
D	increases	convection

20 A rod is made half of glass and half of copper. Four pins **A**, **B**, **C** and **D** are attached to the rod by wax. The rod is heated in the centre as shown.

View solution

The pins fall off when the wax melts.

Which pin falls off first?

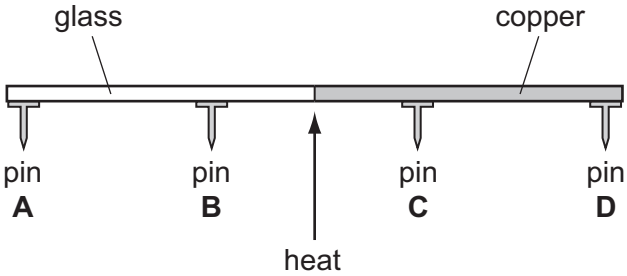

© UCLES 2016

21 Which row shows the natures of light waves, sound waves and X-rays?

View solution

	light waves	sound waves	X-rays
A	longitudinal	longitudinal	transverse
B	longitudinal	transverse	longitudinal
C	transverse	longitudinal	transverse
D	transverse	transverse	longitudinal

22 Radio waves are received at a house at the bottom of a hill.

View solution

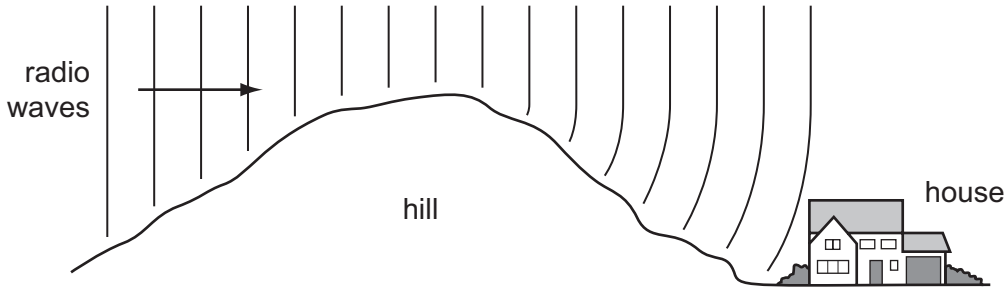

The waves reach the house because the hill has caused them to be

A diffracted.

B radiated.

C reflected.

D refracted.

23 The ray diagram shows the image of an object formed by a converging lens.

View solution

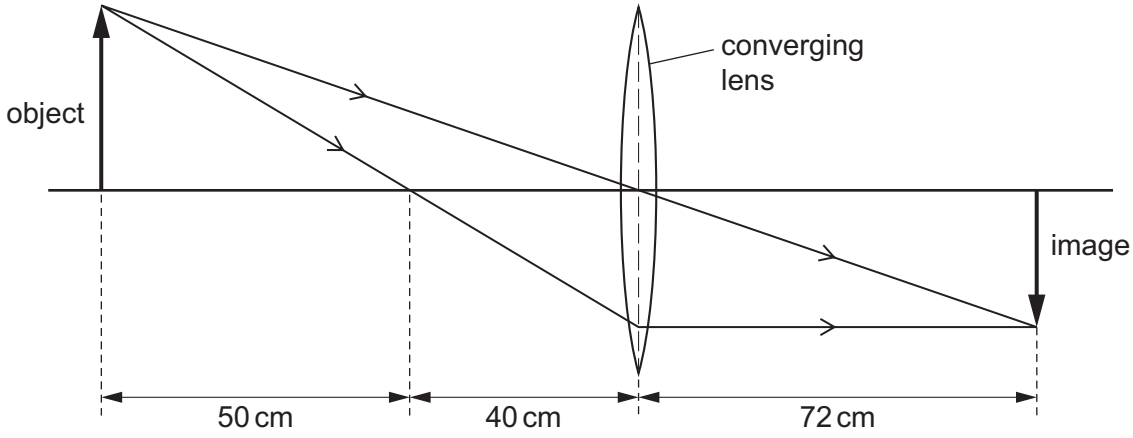

What is the focal length of the lens?

A 40 cm **B** 50 cm **C** 72 cm **D** 90 cm

24 The diagram shows the dispersion of white light by a prism.

View solution

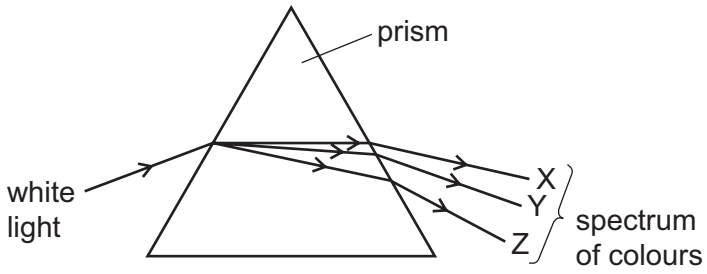

Which row could be correct for the colours seen at X, at Y and at Z?

	colour at X	colour at Y	colour at Z
A	red	violet	yellow
B	red	yellow	violet
C	violet	yellow	red
D	yellow	red	violet

25 Why can ultrasound **not** be heard by humans?

View solution

A The amplitude is too great.

B The frequency is too great.

C The speed is too great.

D The wavelength is too great.

26 A sound wave has a certain amplitude and a certain frequency.

View solution

A second sound wave is quieter and lower in pitch than the first sound wave.

The second wave has

A a larger amplitude and a greater frequency.

B a larger amplitude and a smaller frequency.

C a smaller amplitude and a greater frequency.

D a smaller amplitude and a smaller frequency.

27 Which statement about a magnet is correct?

View solution

A A magnet attracts a gold rod.

B A magnet does not attract a plastic rod.

C A magnet never repels another magnet.

D A magnet sometimes repels an unmagnetised nickel rod.

© UCLES 2016

28 A student wishes to make a permanent magnet. She has an iron rod and a steel rod.

Which rod should she use to make the permanent magnet, and is this rod a hard magnetic material or a soft magnetic material?

View solution

	rod	type of magnetic material
A	iron	hard
B	iron	soft
C	steel	hard
D	steel	soft

View solution

29 The circuit shown includes two meters X and Y, connected correctly.

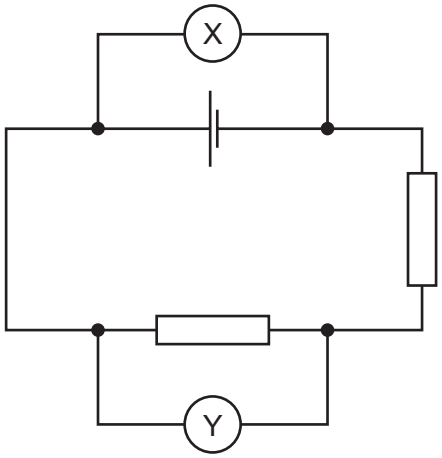

Which row gives the unit of the quantity measured by X and the unit of the quantity measured by Y?

	meter X	meter Y
A	ampere	ampere
B	ampere	volt
C	volt	ampere
D	volt	volt

© UCLES 2016

30 A polythene rod is rubbed with a cloth.

View solution

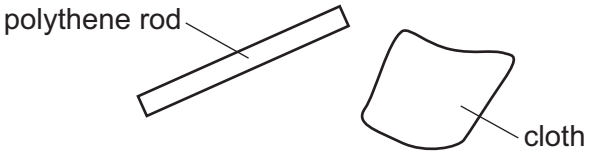

The rod and the cloth both become charged as electrons move between them.

The rod becomes negatively charged.

Which diagram shows how the rod becomes negatively charged, and the final charge on the cloth?

A

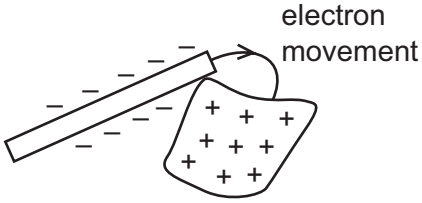

B

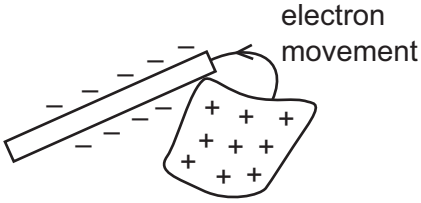

C

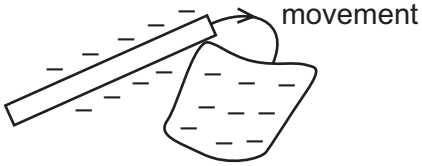

D

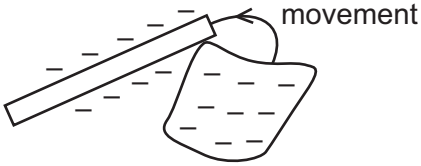

View solution

31 What is the function of a relay?

A to allow a current in one circuit to operate a switch in another circuit

B to prevent an electric shock by earthing a metal case

C to protect a circuit by melting if the current becomes too large

D to transform a d.c. voltage to a different value

© UCLES 2016

32 The circuit shown contains three ammeters X, Y and Z.

View solution

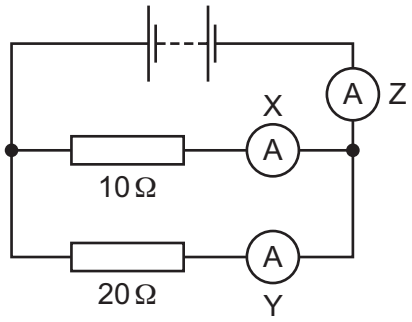

Which ammeter has the largest reading?

A X

B Y

C Z

D They all have the same reading.

33 The diagram shows part of a circuit used to switch street lamps on and off automatically.

View solution

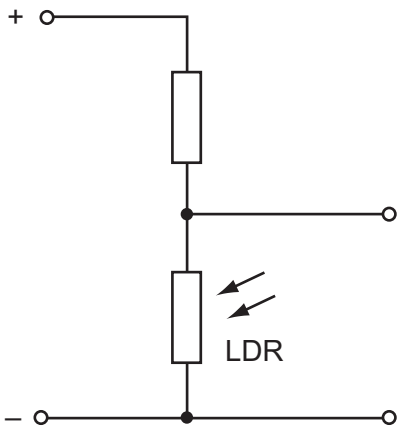

In the evening it gets dark.

Which row shows the effect on the resistance of the light-dependent resistor (LDR) and on the potential difference (p.d.) across it?

	resistance of LDR	p.d. across LDR
A	decreases	decreases
B	decreases	increases
C	increases	decreases
D	increases	increases

© UCLES 2016

34 A domestic circuit includes a 30 A fuse. This protects the wiring if there is too much current in the circuit.

View solution

In which wire is the 30 A fuse positioned, and what does it do when it operates?

	position	operation
A	live wire	disconnects the circuit
B	live wire	reduces the current to 30 A
C	neutral wire	disconnects the circuit
D	neutral wire	reduces the current to 30 A

View solution

35 A strong electromagnet is used to attract pins.

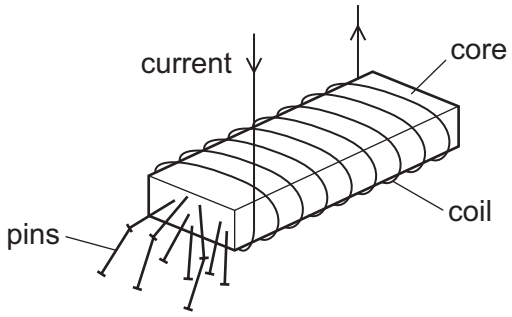

What happens when the current in the coil is halved?

A No pins are attracted.

B Some pins are attracted, but not as many.

C The same number of pins is attracted.

D More pins are attracted.

36 The diagram shows a transformer.

View solution

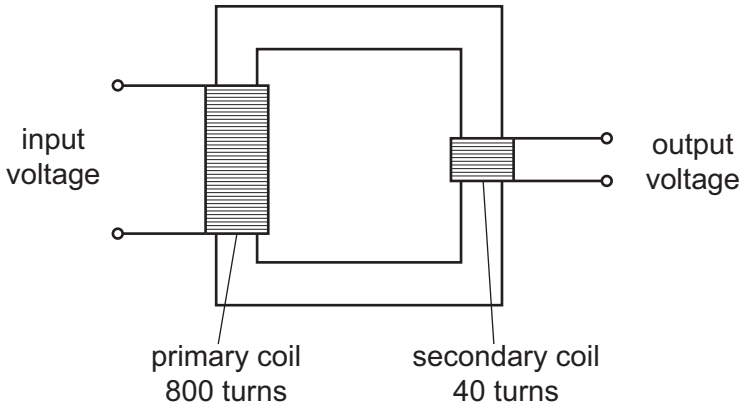

The input voltage is 240 V.

What is the output voltage?

A 6.0 V **B** 12 V **C** 20 V **D** 40 V

View solution

37 How many neutrons are in a nucleus of the nuclide $^{37}_{17}Cl$?

A 17 **B** 20 **C** 37 **D** 54

View solution

38 A certain element has several isotopes.

Which statement about these isotopes is correct?

A They must have different numbers of electrons orbiting their nuclei.

B They must have the same number of neutrons in their nuclei.

C They must have the same number of nucleons in their nuclei.

D They must have the same number of protons in their nuclei.

View solution

39 A radioactive nucleus emits either an α-particle or a β-particle.

What are the products of these two types of radioactive emission?

	product after α-emission	product after β-emission
A	a nucleus of a different element	a nucleus of a different element
B	a nucleus of a different element	a nucleus of the same element
C	a nucleus of the same element	a nucleus of a different element
D	a nucleus of the same element	a nucleus of the same element

© UCLES 2016

40 A reading is taken every 10 minutes of the number of emissions per second from a radioactive source. The table shows the readings.

View solution

time / min	number of emissions per second
0	800
10	560
20	400
30	280
40	200
50	140
60	100

What is the half-life of the source?

A 10 min **B** 20 min **C** 40 min **D** 60 min

© UCLES 2016

BLANK PAGE

BLANK PAGE

BLANK PAGE

Permission to reproduce items where third-party owned material protected by copyright is included has been sought and cleared where possible. Every reasonable effort has been made by the publisher (UCLES) to trace copyright holders, but if any items requiring clearance have unwittingly been included, the publisher will be pleased to make amends at the earliest possible opportunity.

To avoid the issue of disclosure of answer-related information to candidates, all copyright acknowledgements are reproduced online in the Cambridge International Examinations Copyright Acknowledgements Booklet. This is produced for each series of examinations and is freely available to download at www.cie.org.uk after the live examination series.

Cambridge International Examinations is part of the Cambridge Assessment Group. Cambridge Assessment is the brand name of University of Cambridge Local Examinations Syndicate (UCLES), which is itself a department of the University of Cambridge.