Cambridge IGCSE

Cambridge International Examinations
Cambridge International General Certificate of Secondary Education

CANDIDATE NAME									
CENTRE NUMBER						CANDIDATE NUMBER			

PHYSICS **0625/32**

Paper 3 Theory (Core) **May/June 2016**

1 hour 15 minutes

Candidates answer on the Question Paper.

No Additional Materials are required.

READ THESE INSTRUCTIONS FIRST

Write your Centre number, candidate number and name on all the work you hand in.
Write in dark blue or black pen.
You may use an HB pencil for any diagrams or graphs.
Do not use staples, paper clips, glue or correction fluid.
DO **NOT** WRITE IN ANY BARCODES.

Answer **all** questions.
Electronic calculators may be used.
You may lose marks if you do not show your working or if you do not use appropriate units.
Take the weight of 1.0 kg to be 10 N (acceleration of free fall = 10 m/s^2).

At the end of the examination, fasten all your work securely together.
The number of marks is given in brackets [ ] at the end of each question or part question.

The syllabus is approved for use in England, Wales and Northern Ireland as a Cambridge International Level 1/Level 2 Certificate.

© UCLES 2016

CAMBRIDGE International Examinations

1 A student investigates water dripping from a tap (faucet).

Fig. 1.1 shows the dripping tap and a rule next to a container collecting the drops of water.

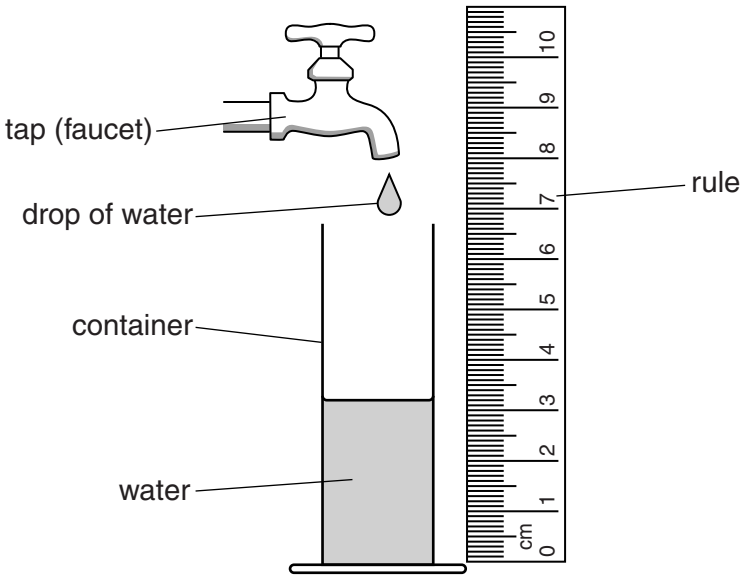

Fig. 1.1

(a) Name the quantity that the student is measuring with the rule.

View solution

..... [1]

(b) The student uses a digital stopwatch to measure the time between the drops of water. She repeats her measurement.

View solution

Fig. 1.2 shows the reading on the stopwatch for all her measurements.



time = ... s time = ... s time = ... s

Fig. 1.2

(i) On the line below each stopwatch, record the time, in seconds, measured by the student. [1]

(ii) Calculate the average time between drops of water. Show your working.

View solution

average time between drops = ... s [2]

© UCLES 2016

(c) The student collects drops of water for 15.5 minutes.

Calculate how many drops leave the tap in 15.5 minutes. Use your answer to part **b(ii)**.

View solution

number of drops = ... [3]

[Total: 7]

© UCLES 2016

2 Fig. 2.1 shows the speed-time graph for a student cycling along a straight, flat road.



Fig. 2.1

(a) Calculate the distance he travels in the first 10 s.

View solution

distance = ... m [3]

(b) Fig. 2.2 shows three pairs of forces A, B and C.

View solution

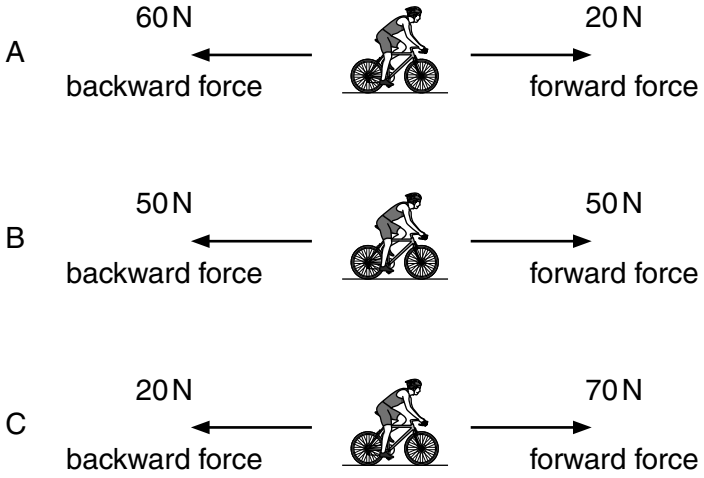

Fig. 2.2

Identify which pair of forces, A, B or C, acts on the cyclist between 11 s and 16 s. Explain your choice.

pair of forces .....

explanation .....

.....

.....

[3]

(c) The cyclist pushes on one pedal with a force of 120 N. The area of his shoe in contact with the pedal is 16 cm^2.

View solution

Calculate the pressure on the pedal. Include the unit.

pressure = ... [4]

[Total: 10]

© UCLES 2016

3 Fig. 3.1 shows a girl and a boy on a see-saw.

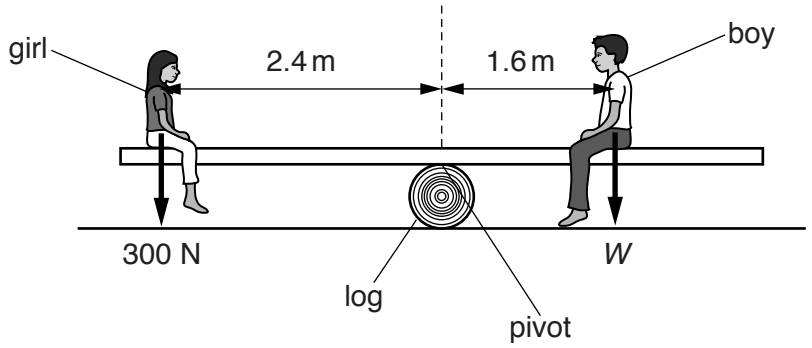

Fig. 3.1

The see-saw pivots on the log.

(a) Calculate the girl's moment about the pivot.

View solution

girl's moment = ... N m [2]

(b) The see-saw is balanced horizontally.

View solution

Calculate the weight *W* of the boy.

weight of boy = ... N [3]

[Total: 5]

© UCLES 2016

4 A student is investigating a mixture of water and ice. The water and ice are at the same temperature. He uses a thermometer.

View solution

(a) Fig. 4.1 shows a thermometer.

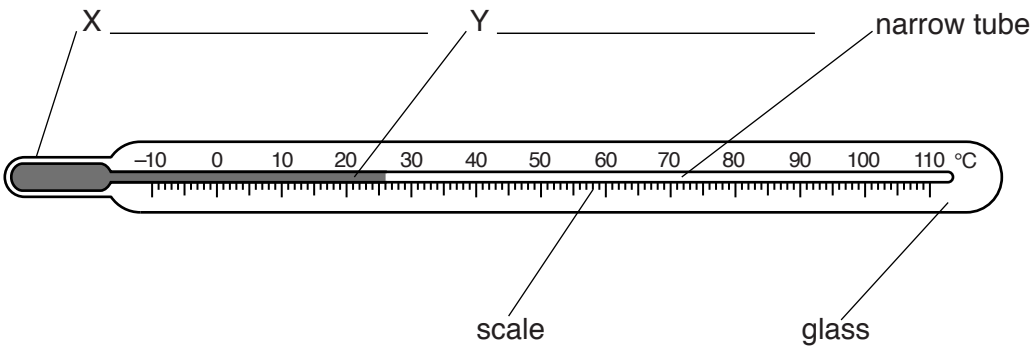

Fig. 4.1

(i) On Fig. 4.1, label X and Y. [2]

(ii) The thermometer is put into the mixture of water and ice.

On Fig. 4.2, draw an arrow pointing to the reading on the scale. [1]

View solution

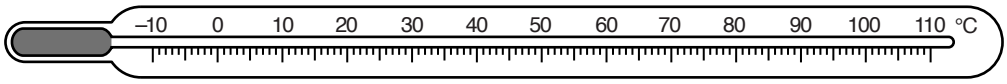

Fig. 4.2

View solution

(b) The beaker of ice and water is left in a warm room for five hours.

State what happens to the ice during this time. Describe this process in terms of the molecules in the ice.

.....

.....

.....

.....

.....

.....

[4]

[Total: 7]

5 Fig. 5.1 shows two circuits, A and B.

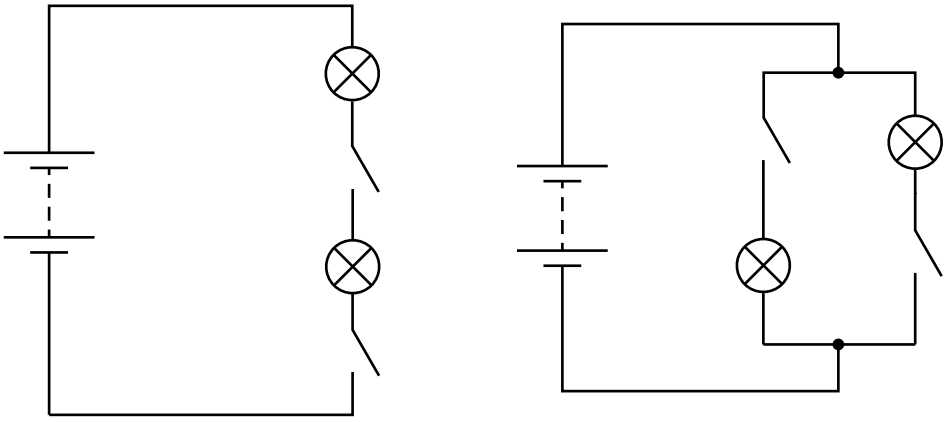

circuit A circuit B

Fig. 5.1

Both circuits contain a 6V power supply and two 6V lamps.

(a) State **two** advantages of circuit B compared to circuit A.

View solution

.....

.....

.....

..... [2]

(b) Fig. 5.2 shows the energy input and outputs, in one second, for one electric lamp.

View solution

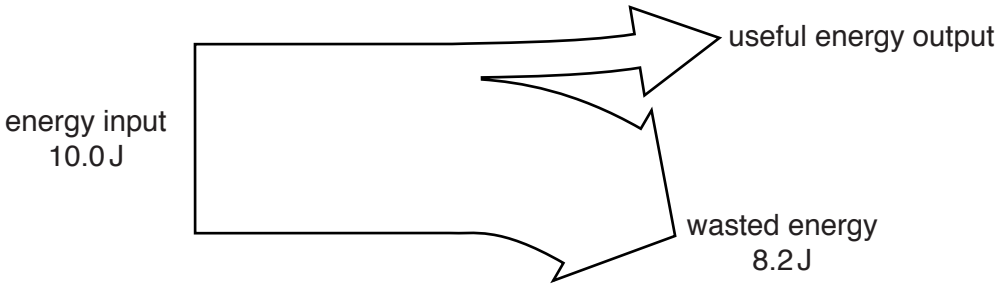

Fig. 5.2

(i) Calculate the useful energy output, in one second, of the lamp.

useful energy output = ...J [1]

© UCLES 2016

(ii) In the space below draw a labelled diagram, similar to Fig. 5.2, for a more efficient lamp.

View solution

[1]

(c) Electricity can be generated using wind turbines.

View solution

Fig. 5.3 shows two wind turbines.

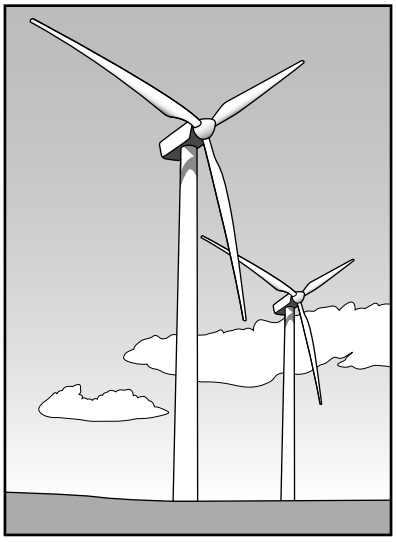

Fig. 5.3

State **two** advantages and **two** disadvantages of using wind turbines, rather than fossil fuels, to generate electricity.

advantages .....

.....

.....

.....

disadvantages .....

.....

.....

.....

[4]

[Total: 8]

© UCLES 2016

6 Fig. 6.1 shows the regions of the electromagnetic spectrum. Two regions have not been named.

gamma rays		ultraviolet rays	visible light	infra-red waves		radio waves

Fig. 6.1

View solution

(a) Complete Fig. 6.1 by labelling the two regions that have not been named. [2]

View solution

(b) On Fig. 6.1, circle the region with the longest wavelength. [1]

(c) **(i)** Suggest a use for gamma radiation.

.....

..... [1]

(ii) Suggest a use for ultraviolet radiation.

View solution

.....

..... [1]

[Total: 5]

7 Fig. 7.1 shows a ray of light incident on a rectangular glass block at point X.

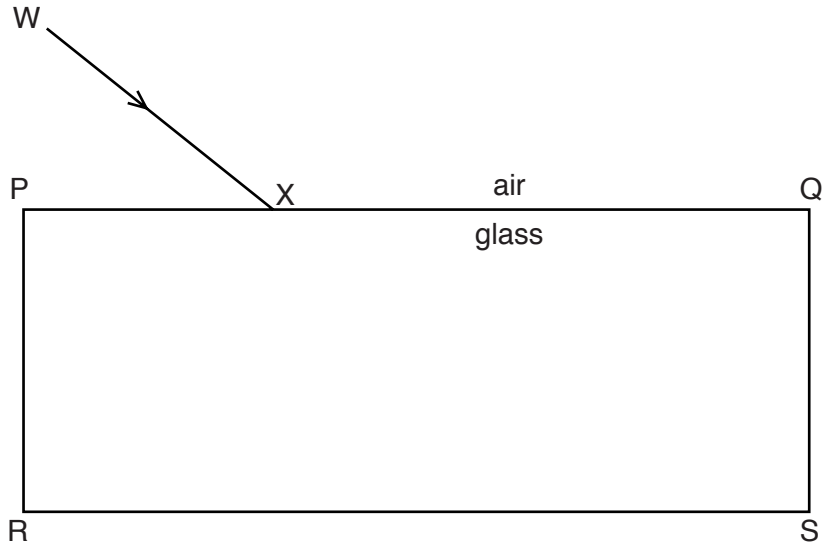

Fig. 7.1

The ray of light is refracted at X.

On Fig. 7.1,

(a) draw the normal at X, [1]

(b) draw the path of the ray through the glass block until it reaches the surface RS, [1]

(c) label, at X, the angle of incidence with a letter *i* and the angle of refraction with a letter *r*, [2]

(d) draw the path of the ray of light leaving the glass block. [1]

[Total: 5]

View solution
View solution
View solution

8 Researchers have found that the best temperature for drinking coffee is 60 °C.

A designer has developed a new type of cup for keeping coffee at 60 °C. The cup is shown in Fig. 8.1.

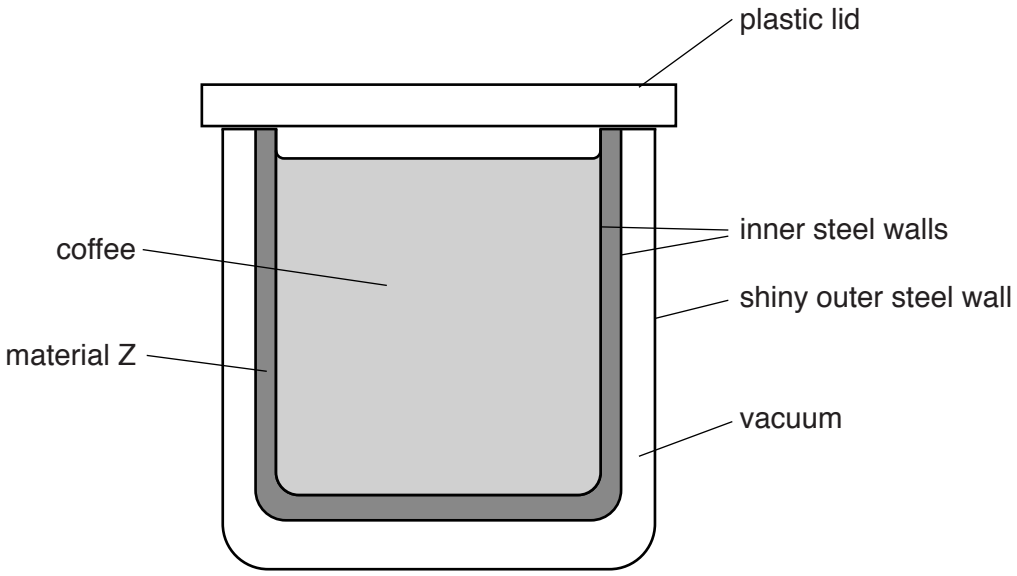

Fig. 8.1

Material Z has a melting point of 60 °C. At room temperature, material Z is solid.

Coffee, at a temperature of 90 °C, is poured into the cup. The coffee cools rapidly to 60 °C.

(a) State what happens to material Z when the hot coffee is poured into the cup.

View solution

..... [1]

(b) Explain how the features of the cup enable the coffee to be kept at 60 °C for a long time.

View solution

plastic lid .....

.....

.....

vacuum .....

.....

.....

shiny outer steel wall .....

.....

.....

material Z .....

.....

.....

.....

.....

[5]

[Total: 6]

9 **(a)** The resistance of a long piece of wire is 6.0 Ω. The potential difference across the wire is 2.0 V.

Calculate the current in the wire.

View solution

current = ... A [3]

(b) A force acts on a wire carrying a current in a magnetic field.

Fig. 9.1 shows the direction of the current in the wire and the direction of the force acting on the wire.

View solution

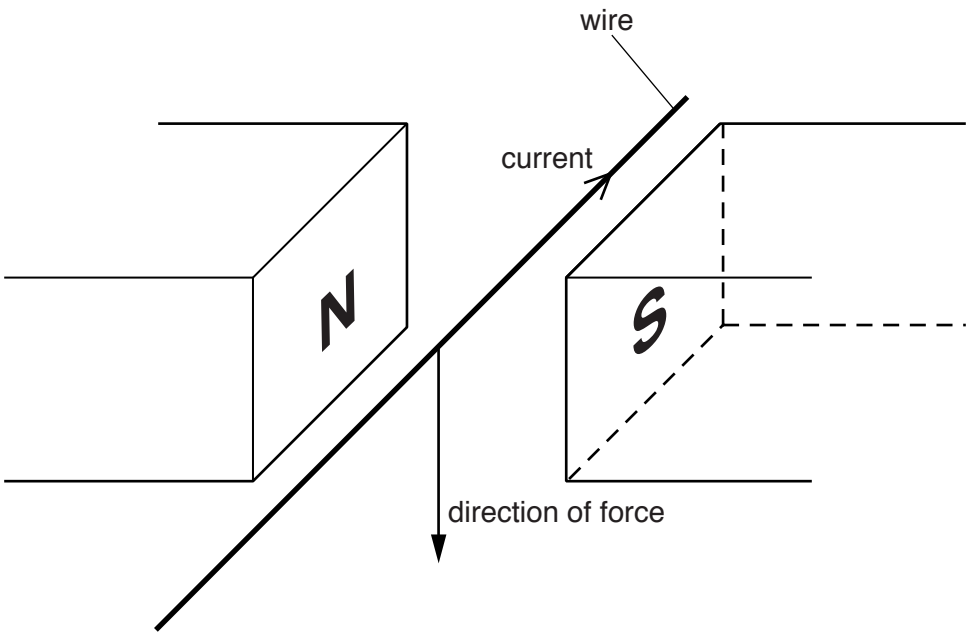

Fig. 9.1

(i) On Fig. 9.1, draw arrows to indicate the direction of the magnetic field. [1]

(ii) The magnetic field is reversed.

View solution

State what happens, if anything, to the direction of the force on the wire.

..... [1]

© UCLES 2016

(c) Fig. 9.2 shows a current-carrying coil in a magnetic field.

View solution

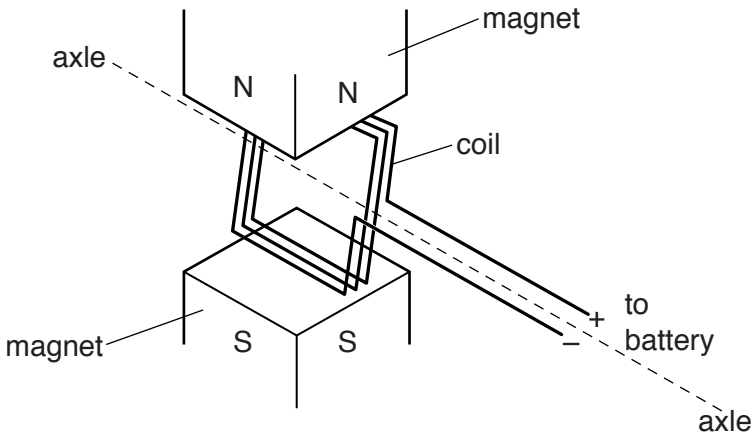

Fig. 9.2

The coil starts to turn about its axle.

(i) State **two** ways of increasing the turning effect on the coil.

1. .....

2. .....

[2]

(ii) Describe and explain the effect of reversing the connections to the battery.

View solution

.....

.....

.....

..... [2]

[Total: 9]

10 Fig. 10.1 shows the charger for a laptop computer.

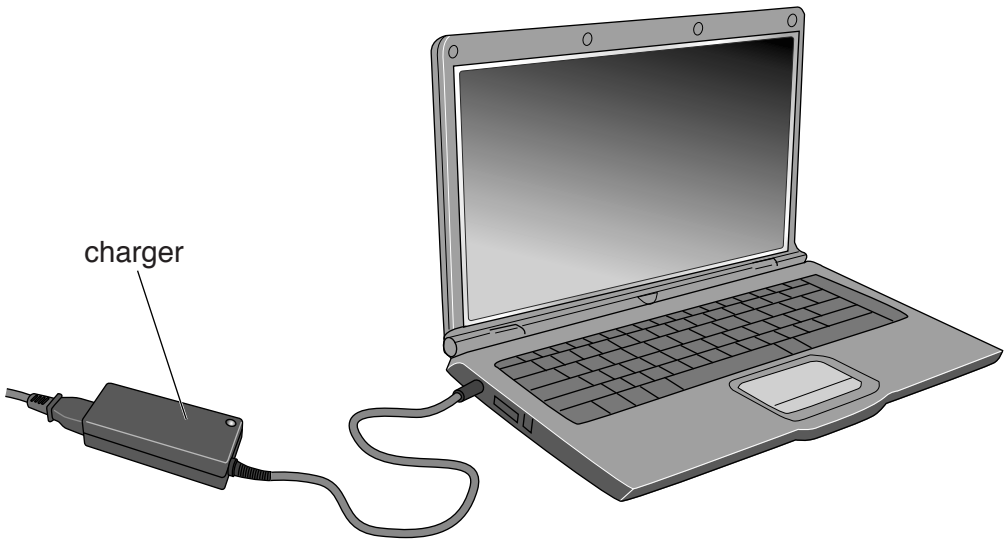

Fig. 10.1

The charger contains a transformer.

(a) The voltage across the primary coil of the transformer is 230 V.

The primary coil has 4995 turns and the secondary coil has 555 turns.

Calculate the output voltage of the transformer.

output voltage = ... V [3]

(b) State the term used to describe this type of transformer.

..... [1]

[Total: 4]

View solution

View solution

11 (a) Any atomic nucleus can be represented as ${}^{A}_{Z}X$.

View solution

(i) State which letter, A, X or Z, is the

- chemical symbol, ...
- nucleon number, ...
- proton number. .....

[2]

(ii) A nucleus of americium-241 can be written as ${}^{241}_{95}Am$.

View solution

1. Determine the number of electrons in a neutral atom of americium-241.

number of electrons = ... [1]

2. Determine the number of neutrons in a nucleus of americium-241.

number of neutrons = ... [1]

(b) Explain what is meant by *isotopes* of an element.

View solution

.....

.....

.....

..... [2]

[Total: 6]

© UCLES 2016

12 (a) A radioactive nucleus decays by the emission of a β-particle.

View solution

State what a β-particle is and give its charge.

.....

..... [2]

(b) The graph in Fig. 12.1 shows how the count rate from a sample of a radioactive substance varies with time.

View solution

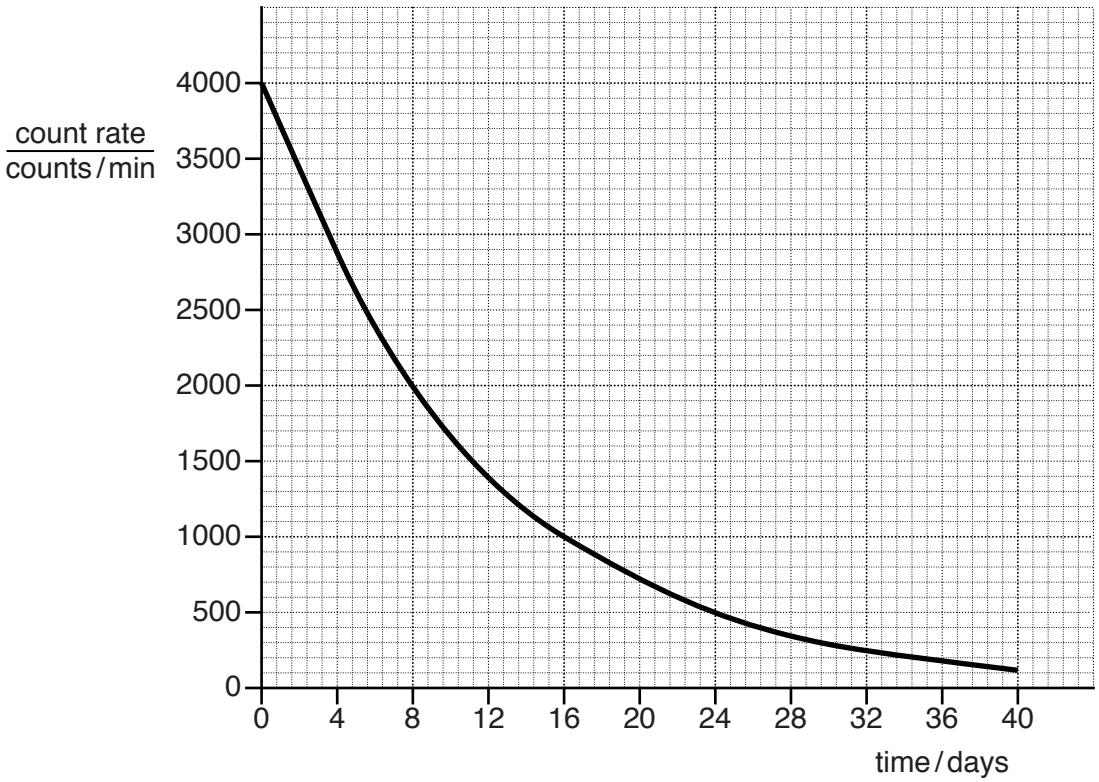

Fig. 12.1

Use the graph to find the half-life. Show your working on the graph.

half-life = ... days [2]

(c) Following an accident, the soil around a nuclear power station is contaminated by caesium-137, which is radioactive.

A sample of this soil containing caesium-137 has a count rate of 180 counts / min. Caesium-137 has a half-life of 30 years and decays by β-emission.

View solution

(i) Calculate the count rate from the caesium-137 in the sample after 60 years.

count rate = ... counts / min [2]

© UCLES 2016

(ii) Suggest why people do not want to live near the power station, even after it has closed.

.....

.....

.....

..... [2]

[Total: 8]

View solution

BLANK PAGE

Permission to reproduce items where third-party owned material protected by copyright is included has been sought and cleared where possible. Every reasonable effort has been made by the publisher (UCLES) to trace copyright holders, but if any items requiring clearance have unwittingly been included, the publisher will be pleased to make amends at the earliest possible opportunity.

To avoid the issue of disclosure of answer-related information to candidates, all copyright acknowledgements are reproduced online in the Cambridge International Examinations Copyright Acknowledgements Booklet. This is produced for each series of examinations and is freely available to download at www.cie.org.uk after the live examination series.

Cambridge International Examinations is part of the Cambridge Assessment Group. Cambridge Assessment is the brand name of University of Cambridge Local Examinations Syndicate (UCLES), which is itself a department of the University of Cambridge.

© UCLES 2016