Cambridge IGCSE

Cambridge International Examinations
Cambridge International General Certificate of Secondary Education

CANDIDATE NAME									
CENTRE NUMBER						CANDIDATE NUMBER				

PHYSICS **0625/42**

Paper 4 Theory (Extended) **May/June 2016**

1 hour 15 minutes

Candidates answer on the Question Paper.

No Additional Materials are required.

READ THESE INSTRUCTIONS FIRST

Write your Centre number, candidate number and name on all the work you hand in.
Write in dark blue or black pen.
You may use an HB pencil for any diagrams or graphs.
Do not use staples, paper clips, glue or correction fluid.
DO **NOT** WRITE IN ANY BARCODES.

Answer **all** questions.
Electronic calculators may be used.
You may lose marks if you do not show your working or if you do not use appropriate units.
Take the weight of 1.0 kg to be 10 N (acceleration of free fall = 10 m / s^2).

At the end of the examination, fasten all your work securely together.
The number of marks is given in brackets [ ] at the end of each question or part question.

The syllabus is approved for use in England, Wales and Northern Ireland as a Cambridge International Level 1/Level 2 Certificate.

This document consists of **22** printed pages and **2** blank pages.

CAMBRIDGE International Examinations

© UCLES 2016

[Turn over

1 **(a)** An object is moving in a straight line at constant speed. A force is applied to the object.

View solution

State the possible changes in the motion of the object.

.....

.....

..... [2]

(b) Fig. 1.1 shows a skier taking part in a speed competition. The winner of the competition has the highest average speed over the 100 m section shown in Fig. 1.1.

View solution

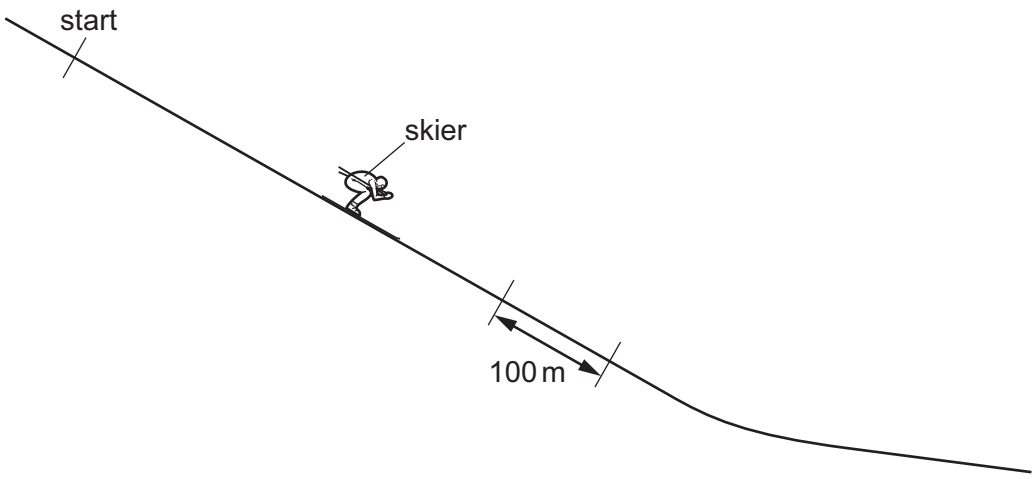

Fig. 1.1

(i) The skier starts from rest and has a constant acceleration. He reaches a speed of 60 m / s in 16 s.

Calculate the skier's acceleration.

acceleration = ... [2]

© UCLES 2016

(ii) Over the length of the 100 m section, the time recorded is 1.85 s.

View solution

Calculate the skier's average speed over the section.

average speed = ... [2]

(iii) Suggest why the skier bends his body, as shown in Fig. 1.1.

View solution

Explain your answer.

.....

.....

..... [2]

[Total: 8]

© UCLES 2016

2 Fig. 2.1 shows two railway trucks on a track.

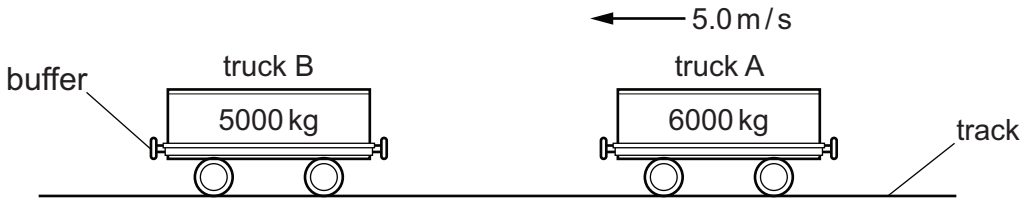

Fig. 2.1

Truck A of mass 6000 kg is moving at 5.0 m / s. It is approaching truck B of mass 5000 kg, which is stationary.

(a) Calculate the momentum of truck A.

View solution

momentum = ... [2]

(b) The trucks collide, their buffers compress and then they bounce off each other, remaining undamaged.

View solution

After the collision, truck B has a momentum of 27 000 kg m / s.

(i) Determine the impulse applied to truck B.

impulse = ... [2]

(ii) The trucks are in contact for 0.60 s.

View solution

Calculate the average force on truck B.

force = ... [2]

© UCLES 2016

(iii) Calculate the final speed of truck A.

View solution

speed = ... [3]

[Total: 9]

© UCLES 2016

3 Fig. 3.1 shows a cabin used to transport passengers up a hillside.

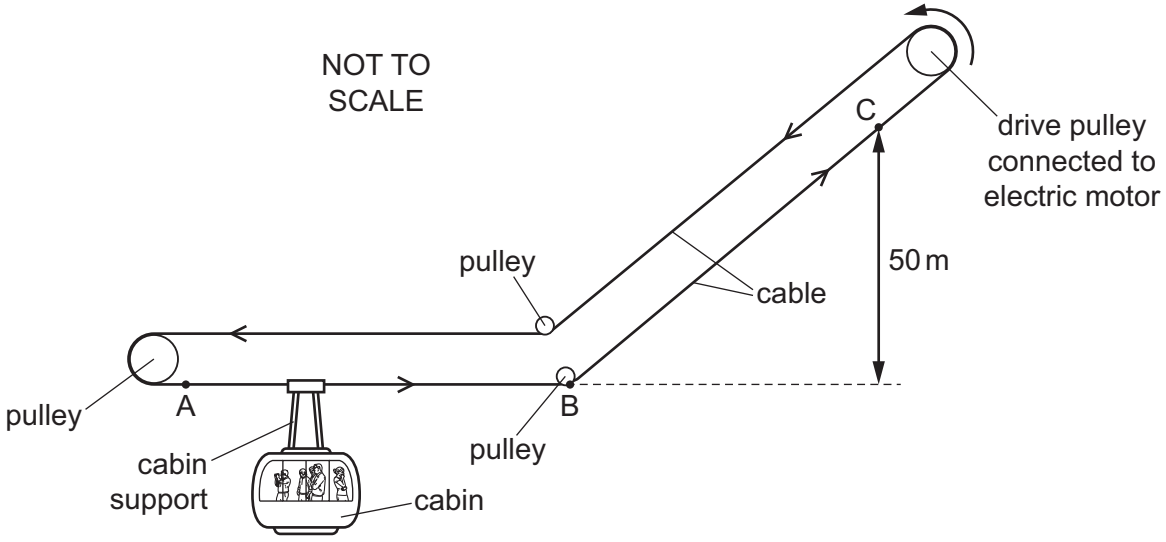

Fig. 3.1

The cabin is attached to a cable which moves horizontally from A to B, then up the hill from B to C.

(a) There is an electrical input of energy to the motor which moves the cable.

View solution

Place **two** ticks against types of energy that increase as the cabin moves **horizontally** at **constant speed** from A to B.

- ☐ kinetic energy of the cabin
- ☐ gravitational potential energy of the cabin
- ☐ gravitational potential energy of the cable
- ☐ internal energy of the surroundings
- ☐ internal energy of the wires of the motor

[2]

(b) The cabin and passengers have a total mass of 800 kg. The vertical distance between B and C is 50 m.

View solution

Calculate the increase of gravitational potential energy of the cabin and passengers when they move from B to C.

energy = ... [2]

© UCLES 2016

(c) The cabin then descends back from C to B.

The weight of the cabin pulls the cable, which rotates the motor. The electric motor acts as a generator when rotated in this way.

Explain the environmental and economic benefits of this arrangement.

View solution

.....

.....

.....

.....

.....

..... [3]

[Total: 7]

© UCLES 2016

4 An archaeologist is investigating a shipwreck and discovers a wooden box on the seabed.

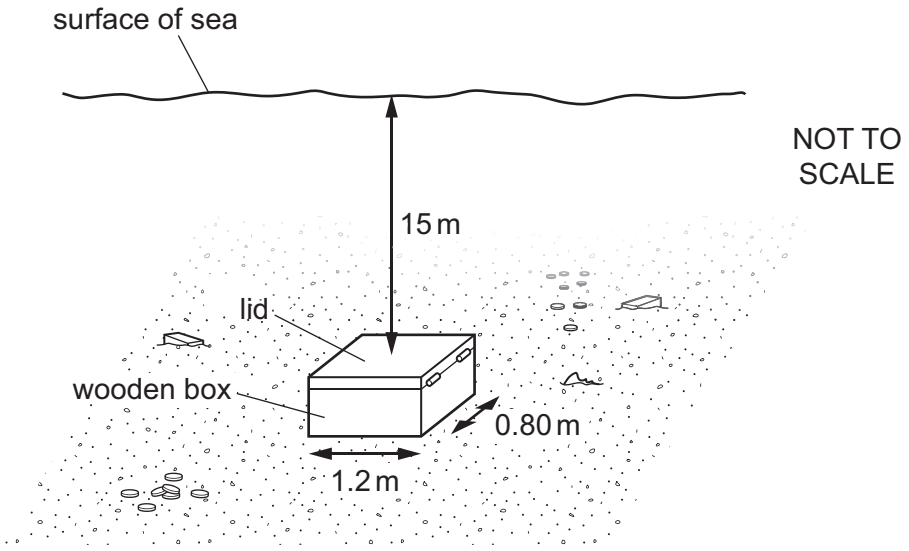

Fig. 4.1

The dimensions of the lid of the box are 1.2 m by 0.80 m and the pressure of the atmosphere is 1.0×10^5 Pa. The lid is 15 m below the surface of the sea.

(a) The density of sea-water is 1020 kg / m^3.

Calculate

(i) the pressure on the lid of the box due to the sea-water,

pressure = ... [2]

(ii) the total pressure on the lid,

pressure = ... [1]

(iii) the downward force that the total pressure produces on the lid.

View solution

force = ... [2]

(b) The force needed to open the lid is **not** equal to the value calculated in **(a)(iii)**.

View solution

Suggest **two** reasons for this.

1. .....

.....

2. .....

..... [2]

[Total: 7]

© UCLES 2016

5 Two pans containing water are placed on the hotplates of an electric cooker, as shown in Fig. 5.1.

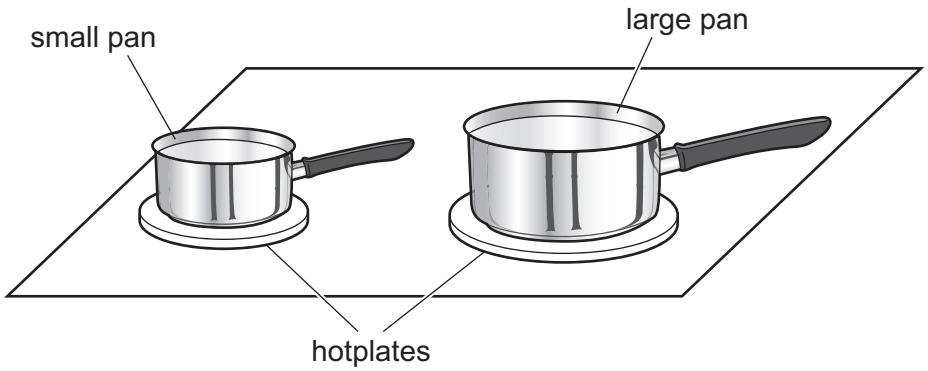

Fig. 5.1

The hotplates are switched on and the temperature of the water in the pans starts to increase.

When the temperature of the water is below 100 °C, some water is evaporating. At 100 °C, the water starts to boil and its temperature remains constant.

(a) State and explain which pan has the greater rate of evaporation of water when both pans of water are at the same temperature.

View solution

.....

.....

..... [1]

(b) Apart from the temperature at which it occurs, state how boiling differs from evaporation.

View solution

.....

.....

..... [1]

(c) When the water is boiling, thermal energy is being supplied to the water at a rate of 920 W.

(i) Explain the effect on the molecules of the thermal energy supplied.

View solution

.....

.....

..... [2]

© UCLES 2016

(ii) The specific latent heat of vaporisation of water is 2.3×10^6 J / kg.

Calculate the mass of water that boils away in 5.0 minutes.

View solution

mass = ... [3]

[Total: 7]

© UCLES 2016

6 **(a)** Fig. 6.1 shows a protractor superimposed on the path of a ray of light. The light is travelling in glass towards the boundary with air.

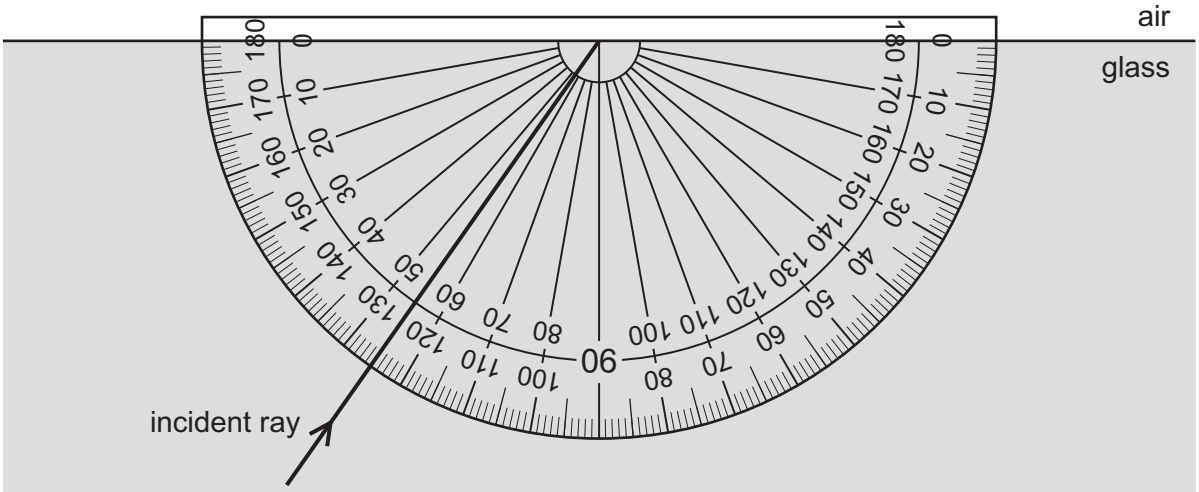

Fig. 6.1

(i) Use the protractor to measure the angle of incidence of the ray of light at the boundary with the air.

angle of incidence = ... [1]

(ii) The refractive index of the glass is 1.56.

Calculate the angle of refraction in the air.

angle of refraction = ... [3]

(b) **(i)** State what is meant by *critical angle*.

.....

..... [1]

(ii) Calculate the critical angle of light in glass of refractive index 1.56.

View solution

critical angle = ... [2]

(c) Fig. 6.2 shows a water wave crossing a boundary from shallow water to deep water.

View solution

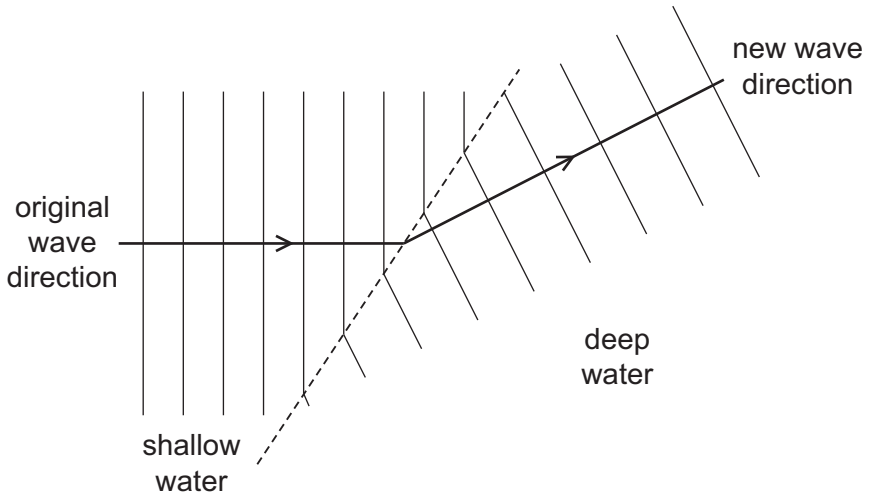

Fig. 6.2

(i) Name the process that takes place at the boundary between the shallow water and the deep water.

..... [1]

(ii) Tick **one** box corresponding to the property of the wave that is the same in the shallow water as in the deep water.

View solution

- ☐ amplitude
- ☐ frequency
- ☐ speed
- ☐ wavelength

[1]

[Total: 9]

© UCLES 2016

7 **(a)** Describe the use of X-rays in a security application. Include a diagram.

View solution

.....

.....

.....

.....

..... [3]

(b) Draw a straight line from each wave to the most appropriate speed.

View solution

radio waves in air	300 m / s (3×10^2)
ultrasound in air	6000 m / s (6×10^3)
X-rays in a vacuum	1 000 000 m / s (1×10^6)
	300 000 000 m / s (3×10^8)
	60 000 000 000 m / s (6×10^{10})
	1 000 000 000 000 m / s (1×10^{12})

[3]

[Total: 6]

© UCLES 2016

8 **(a)** Fig. 8.1 shows a coil wound around a steel bar that is initially unmagnetised.

View solution

Any appropriate power supply can be connected between the terminals A and B. No other apparatus is available.

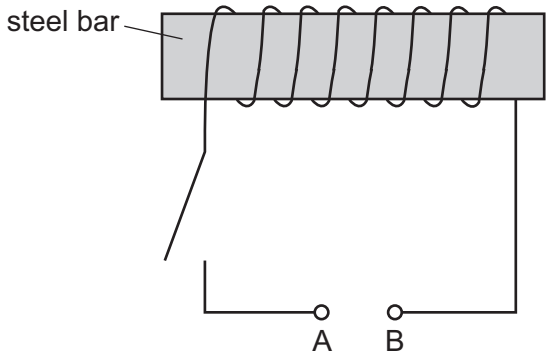

Fig. 8.1

Describe

- how the steel bar can be magnetised,
- how the steel bar can then be demagnetised.

magnetised: .....

.....

.....

demagnetised: .....

.....

..... [4]

© UCLES 2016

(b) Fig. 8.2 shows a transformer.

View solution

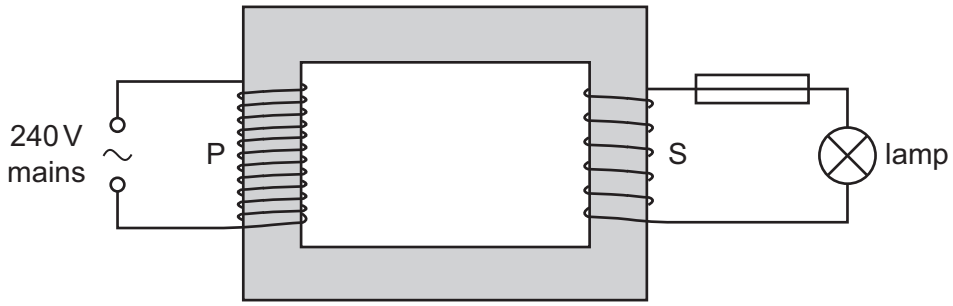

Fig. 8.2

A 240 V mains supply is connected to the primary coil P. The voltage across the secondary coil S is 12 V. A lamp, in series with a 3.0 A fuse, is connected to S.

The number of turns in the coils of the transformer is not shown accurately in Fig. 8.2.

Predict, with a suitable calculation, whether the fuse blows when there is a current of 0.20 A in the primary coil.

.....

.....

.....

.....

..... [3]

[Total: 7]

© UCLES 2016

9 Fig. 9.1 shows a conducting ball that oscillates between two charged plates.

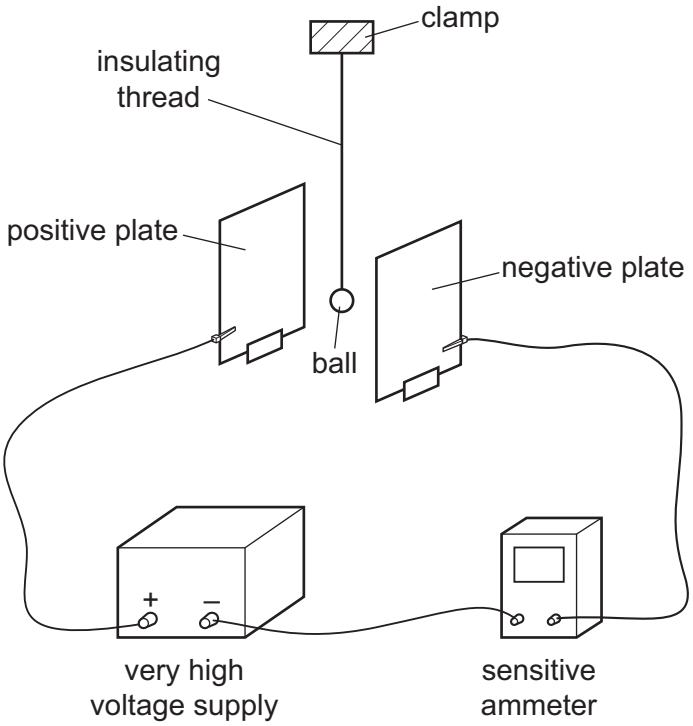

Fig. 9.1

The ball repeatedly strikes each plate in turn.

(a) Explain, in terms of the charge on the ball, why the ball moves to the positive plate after striking the negative plate.

View solution

.....

.....

.....

..... [2]

(b) State which particles move through the sensitive ammeter and the direction in which they move.

View solution

.....

..... [2]

© UCLES 2016

(c) For each complete oscillation of the ball moving between the plates, a charge of 8.5×10^{-10} C is transferred from one plate to the other. The frequency of oscillation is 4.0 Hz.

View solution

Calculate the current shown on the sensitive ammeter.

current = ... [3]

[Total: 7]

© UCLES 2016

10 Fig. 10.1 shows part of the circuit of a hair-dryer with a 240 V a.c. supply.

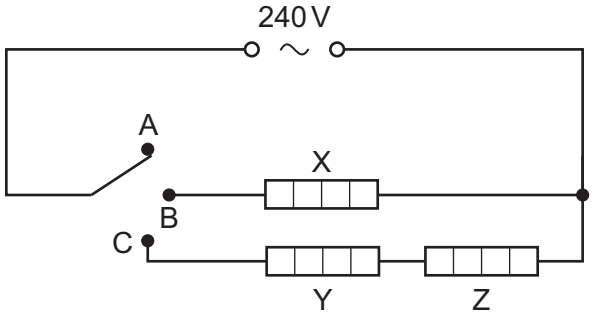

Fig. 10.1

The switch can be in one of three positions:

- position A: off (as shown),
- position B: low heater power,
- position C: high heater power.

All three heaters X, Y and Z each have a power of 1000 W when used in this hair-dryer.

Heaters Y and Z have equal resistances.

Calculate

(a) the resistance of heater X,

View solution

resistance = ... [2]

(b) the resistance of heater Y,

View solution

resistance = ... [1]

© UCLES 2016

(c) the current in heater Z when the switch is in position C.

View solution

current = ... [2]

[Total: 5]

© UCLES 2016

11 Radon-220 is a radioactive isotope.

(a) The nuclide notation for radon-220 is $^{220}_{86}Rn$.

View solution

Describe the composition of a neutral atom of radon-220.

.....

.....

.....

..... [3]

(b) A nucleus of radon-220 decays to an isotope of polonium (Po) by emitting an alpha particle.

Complete the nuclide equation for the decay of radon-220.

View solution

$$^{220}_{86}Rn \rightarrow \text{.....}^{\text{.....}}_{\text{.....}}\alpha + \text{.....}^{\text{.....}}_{\text{.....}}Po$$

[3]

(c) A detector of radiation is placed near a sample of radon-220 and gives a reading of 720 counts / s. The half-life of radon-220 is 55 s.

View solution

Calculate the reading after 220 s. Ignore background radiation.

reading = ... [2]

[Total: 8]

© UCLES 2016

BLANK PAGE

© UCLES 2016

BLANK PAGE

Permission to reproduce items where third-party owned material protected by copyright is included has been sought and cleared where possible. Every reasonable effort has been made by the publisher (UCLES) to trace copyright holders, but if any items requiring clearance have unwittingly been included, the publisher will be pleased to make amends at the earliest possible opportunity.

To avoid the issue of disclosure of answer-related information to candidates, all copyright acknowledgements are reproduced online in the Cambridge International Examinations Copyright Acknowledgements Booklet. This is produced for each series of examinations and is freely available to download at www.cie.org.uk after the live examination series.

Cambridge International Examinations is part of the Cambridge Assessment Group. Cambridge Assessment is the brand name of University of Cambridge Local Examinations Syndicate (UCLES), which is itself a department of the University of Cambridge.

© UCLES 2016