Cambridge International Examinations
Cambridge International General Certificate of Secondary Education

CANDIDATE NAME									
CENTRE NUMBER						CANDIDATE NUMBER				

PHYSICS **0625/43**

Paper 4 Theory (Extended) **May/June 2016**

1 hour 15 minutes

Candidates answer on the Question Paper.

No Additional Materials are required.

READ THESE INSTRUCTIONS FIRST

Write your Centre number, candidate number and name on all the work you hand in.
Write in dark blue or black pen.
You may use an HB pencil for any diagrams or graphs.
Do not use staples, paper clips, glue or correction fluid.
DO **NOT** WRITE IN ANY BARCODES.

Answer **all** questions.
Electronic calculators may be used.
You may lose marks if you do not show your working or if you do not use appropriate units.
Take the weight of 1.0 kg to be 10 N (acceleration of free fall = 10 m / s^2).

At the end of the examination, fasten all your work securely together.
The number of marks is given in brackets [ ] at the end of each question or part question.

The syllabus is approved for use in England, Wales and Northern Ireland as a Cambridge International Level 1/Level 2 Certificate.

This document consists of **22** printed pages and **2** blank pages.

© UCLES 2016

1 **(a)** State why force is a *vector* quantity.

View solution

..... [1]

(b) A 20 N force and a 15 N force act at the same time on an object of mass 14 kg.

View solution

Calculate

(i) the maximum possible force on the object due to these two forces,

force = ... [1]

(ii) the acceleration caused by a resultant force equal to this maximum force.

View solution

acceleration = ... [2]

© UCLES 2016

(c) Fig. 1.1 shows a river in which the velocity of the flowing water is 0.85 m / s parallel to the river banks.

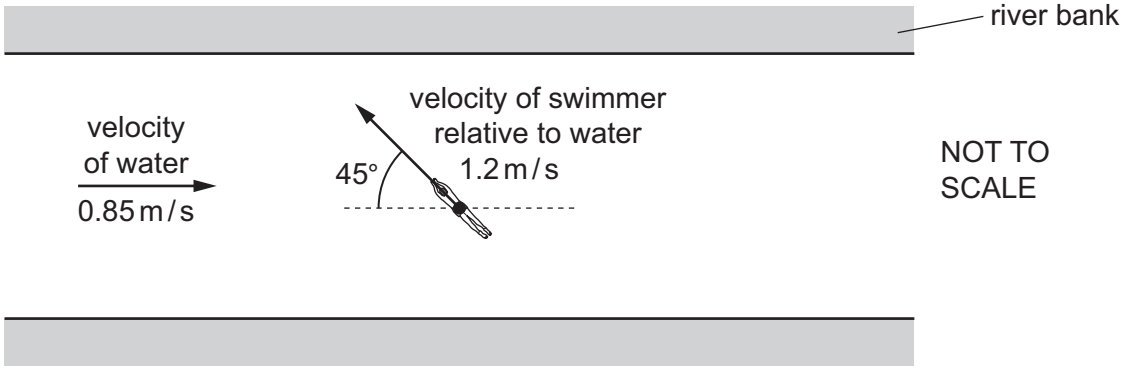

Fig. 1.1

A swimmer sets off from one bank. The velocity of the swimmer relative to the water is 1.2 m / s at 45° to the river banks, as shown in Fig. 1.1.

In the space below, draw a scale diagram to determine the resultant velocity of the swimmer relative to the river banks. This velocity is the resultant of the two velocities shown on Fig. 1.1. Label this resultant on your diagram.

resultant velocity = ... [3]

[Total: 7]

© UCLES 2016

2 Fig. 2.1 shows two cars, A and B, before they collide.

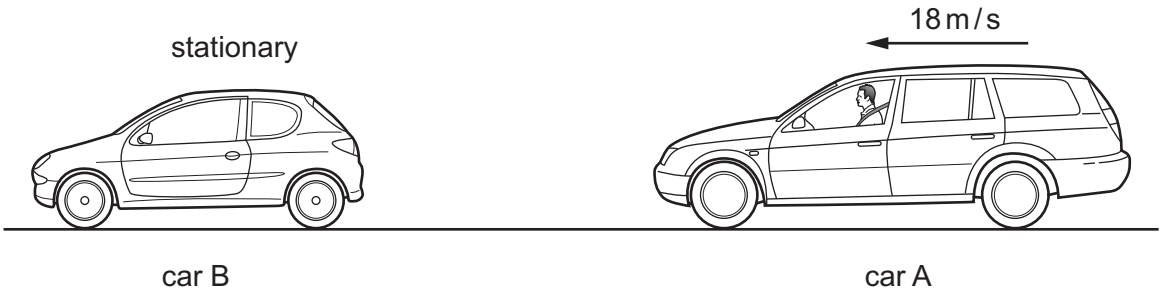

Fig. 2.1

Car B, of mass 1200 kg, is stationary. Car A, of mass 2000 kg, is travelling towards car B at 18 m / s.

(a) Calculate the momentum of car A.

View solution

momentum = ... [2]

(b) The cars collide and car B experiences an impulse. Car A continues to move in the same direction, with a momentum of 21 000 kg m / s.

View solution

(i) Calculate the momentum of car B immediately after the collision.

momentum = ... [1]

(ii) Determine the average impulse experienced by car B during the collision.

View solution

impulse = ... [1]

© UCLES 2016

(iii) The cars are in contact for 0.20 s.

Calculate the average resultant force experienced by car B during the collision.

View solution

force = ... [2]

(c) A modern car is designed so that, during a collision, the front section of the car is crushed and the time of contact increases.

Explain the benefit of increasing the time of contact for the people in the car.

View solution

.....

.....

.....

..... [2]

[Total: 8]

© UCLES 2016

3 A test-tube containing solid wax is heated by placing it in a beaker of very hot water for several minutes. The solid wax becomes a liquid.

(a) State, in terms of molecules, how a solid differs from a liquid.

View solution

.....

.....

.....

..... [2]

(b) Explain, in terms of molecules, why thermal energy must be supplied for a solid to become a liquid.

View solution

.....

.....

..... [1]

(c) The test-tube is removed from the hot water and held in a clamp stand.

Fig. 3.1 shows the test-tube and liquid wax cooling in air.

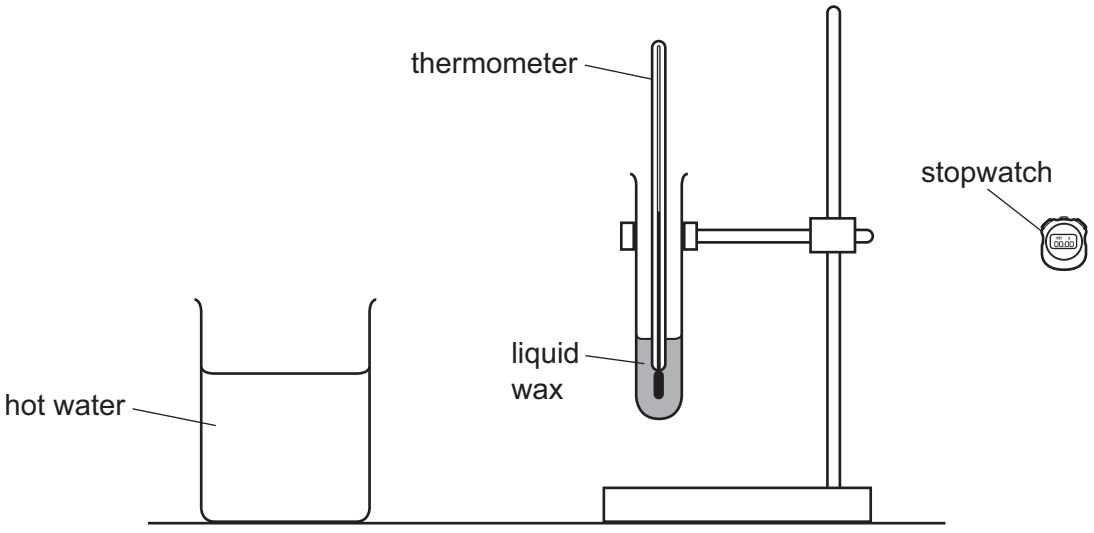

Fig. 3.1

As the wax cools, its temperature is recorded at regular time intervals.

© UCLES 2016

Fig. 3.2 is the temperature-time graph for the wax.

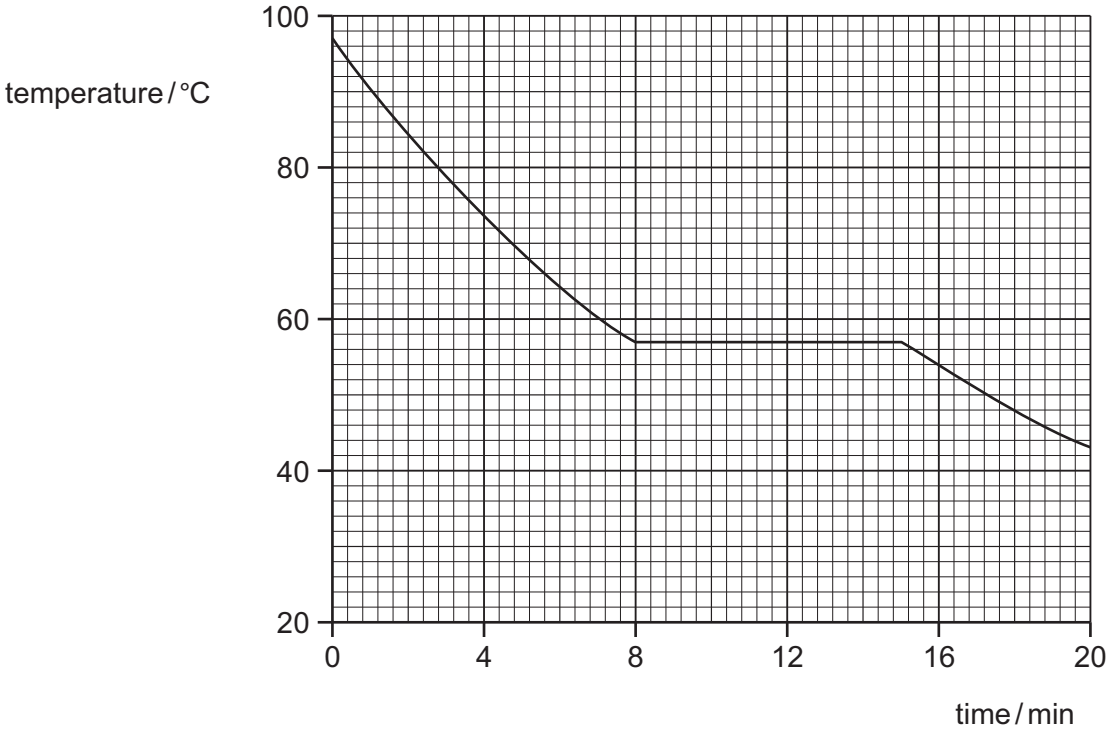

Fig. 3.2

(i) Using Fig. 3.2, determine the melting point of the wax.

View solution

melting point = ... [1]

(ii) The specific latent heat of fusion of the wax is 210 J / g. The test-tube contains 50 g of wax.

Using Fig. 3.2, determine the rate at which the wax is losing internal energy as the wax solidifies. Give your answer in J / min.

View solution

rate of loss of energy = ... J / min [4]

[Total: 8]

© UCLES 2016

4 In an industrial process, a gas that is already at high pressure is trapped in a large cylinder by a piston.

Fig. 4.1 shows the gas, the cylinder and the piston.

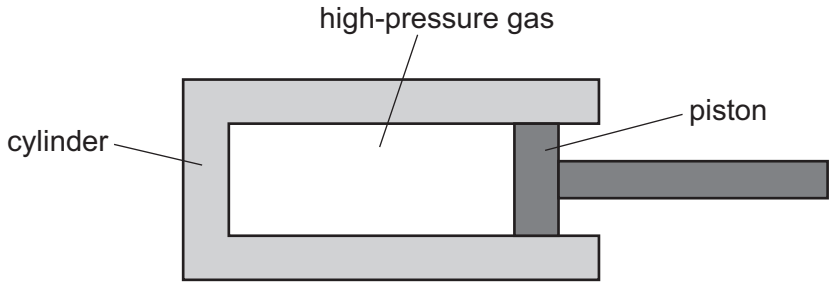

Fig. 4.1

The piston is pushed into the cylinder. As the pressure of the gas changes, its temperature remains constant.

(a) Fig. 4.2 shows how the pressure of the trapped gas depends on its volume.

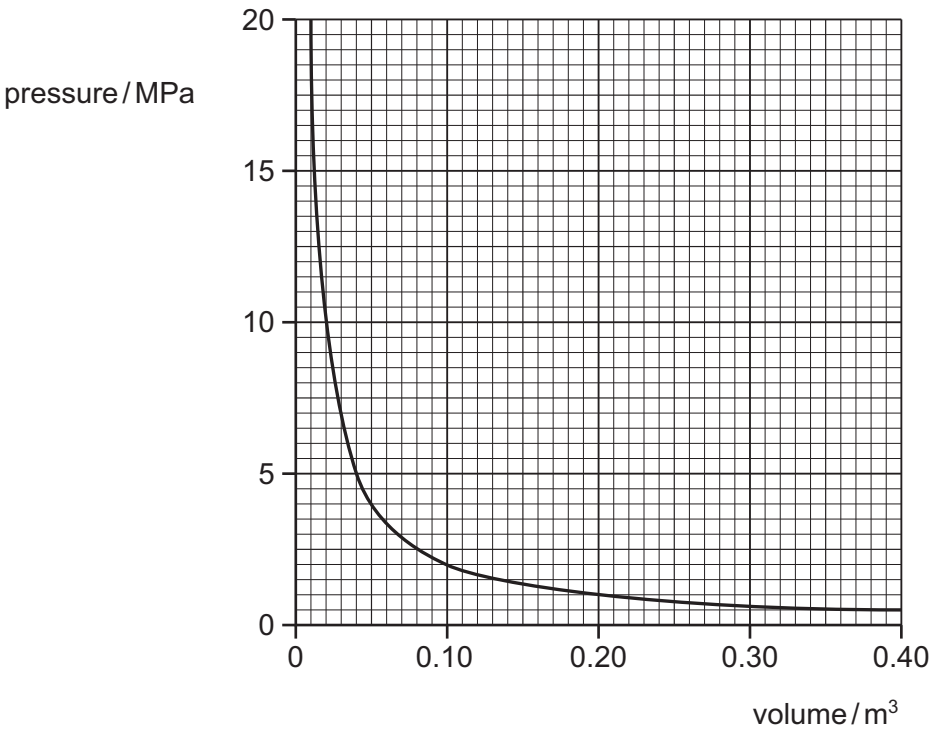

Fig. 4.2

© UCLES 2016

(i) Describe the relationship shown by the graph between the pressure of the gas and the volume it occupies. Explain this relationship in terms of the molecules.

View solution

.....

.....

.....

.....

.....

..... [3]

(ii) Determine the volume occupied by the gas when it is released into the atmosphere at a pressure of 0.10 MPa. You will need to use data from Fig. 4.2.

View solution

volume = ... [2]

(b) An unused cylinder of the compressed gas is moved into a cold warehouse. The temperature of the gas decreases.

View solution

State how the decrease in the temperature affects

(i) the motion of the gas molecules,

..... [1]

(ii) the pressure of the gas in the cylinder.

View solution

..... [1]

[Total: 7]

© UCLES 2016

5 **(a)** Radio waves, ultrasound and visible light are all waves.

View solution

(i) State what is meant by *ultrasound* and suggest a value for the minimum possible frequency of ultrasound waves.

.....

.....

..... [2]

View solution

(ii) State which of these waves are

- electromagnetic,

.....

- longitudinal.

.....

[2]

© UCLES 2016

(b) Ultrasound passes through both human flesh and bone.

View solution

Fig. 5.1 shows an ultrasound source sending an ultrasound wave into human flesh.

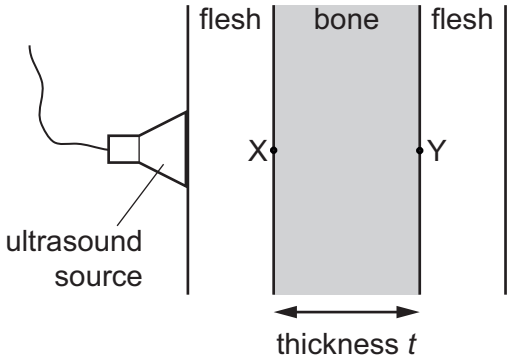

Fig. 5.1

The ultrasound wave travels through the flesh to point X and then through the thickness of the bone to point Y. At Y, some ultrasound is reflected and returns to X.

The total time taken for ultrasound to travel in the bone from X to Y and back to X is 9.0×10^{-6} s. The speed of ultrasound in bone is 4100 m / s.

Calculate the thickness *t* of the bone.

thickness *t* = ... [3]

[Total: 7]

© UCLES 2016

6 **(a)** A block is made from a particular type of glass.

View solution

Fig. 6.1 shows light passing from air into the glass block.

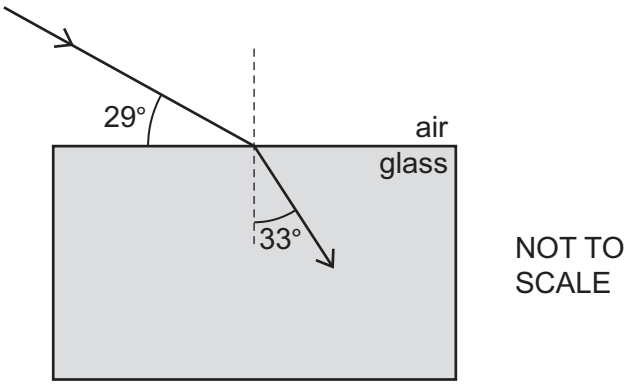

Fig. 6.1

Using information from Fig. 6.1, calculate

(i) the refractive index of light in this type of glass,

refractive index = ... [3]

(ii) the critical angle for light travelling in this type of glass.

View solution

critical angle = ... [2]

© UCLES 2016

(b) State one application of optical fibres. Draw a diagram that shows how an optical fibre is used in this application.

View solution

.....

.....

..... [3]

[Total: 8]

© UCLES 2016

7 A lightning conductor protects a tall building and the people in it against damage and injury caused by lightning strikes.

The lightning conductor is a very long strip of copper that is attached to the side of the building. At the top of the building, the strip of copper is connected to a vertical metal pole and at the bottom of the building, it is buried in the ground.

Fig. 7.1 shows a thundercloud passing over the building.

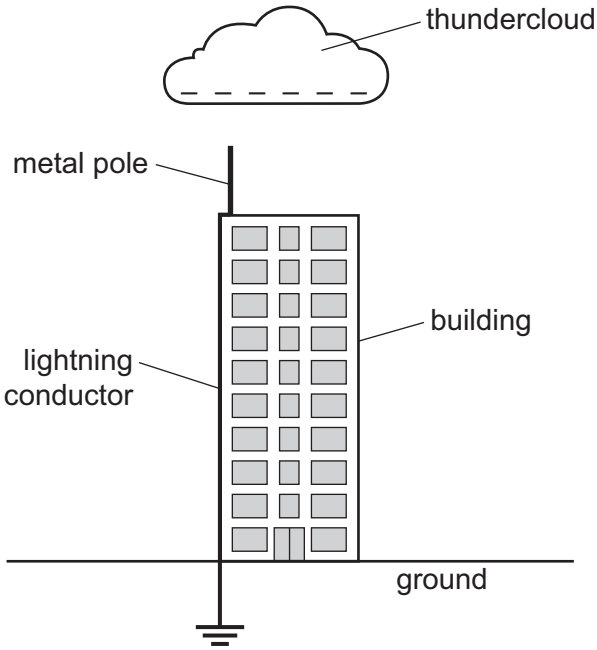

Fig. 7.1

The bottom of the thundercloud is negatively charged.

As the cloud moves closer to the building, the top of the metal pole becomes charged.

(a) State the sign of the charge at the top of the metal pole. Explain, in terms of the particles involved, how it becomes charged.

View solution

.....

.....

.....

..... [2]

(b) As the cloud passes over the building, a lightning strike occurs and a charge of 0.84 C flows through the lightning conductor. The charge flows for 3.5×10^{-5} s.

View solution

(i) Calculate the average current in the lightning conductor during this time.

current = ... [2]

View solution

(ii) It is suggested that the current in the lightning conductor could be measured by connecting a laboratory ammeter between the pole and the copper strip.

State one reason why this cannot be successful.

.....

..... [1]

View solution

(c) The copper strip has a large cross-sectional area.

State how increasing the cross-sectional area of the copper strip affects its resistance.

.....

..... [1]

[Total: 6]

© UCLES 2016

8 (a) (i) In the space below, draw the symbol for a NOR gate.

View solution

[1]

View solution

(ii) Complete the truth table for a NOR gate.

input 1	input 2	output
0	0	
0	1	
1	0	
1	1	

[2]

(b) The fuel for an engine needs to be warm in order for the engine to work. If the temperature of the fuel is below the working temperature T_W, an LED emits light.

View solution

Fig. 8.1 is the diagram of the circuit that includes the LED.

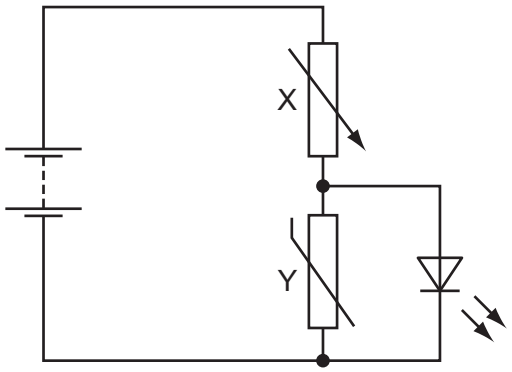

Fig. 8.1

Component Y is in thermal contact with the fuel.

(i) State the name of component X and the name of component Y.

X .....

Y .....

[2]

© UCLES 2016

(ii) The fuel is too cold and the LED is emitting light.

State and explain what happens in the circuit as the temperature of the fuel increases to a value above T_W.

View solution

.....

.....

.....

.....

.....

..... [3]

(c) In Fig. 8.2, the LED is now in parallel with component X instead of with component Y.

View solution

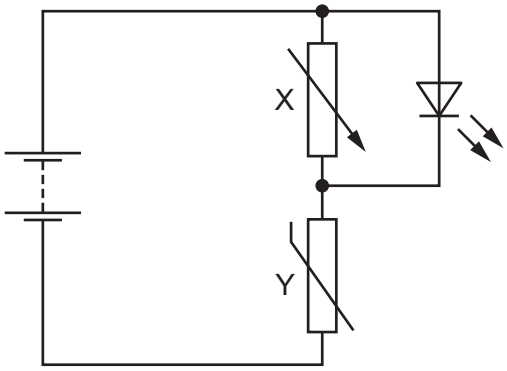

Fig. 8.2

The temperature of component Y increases from a value below T_W to a value above T_W.

Predict what happens in this circuit. Suggest a use for the circuit.

.....

.....

.....

..... [2]

[Total: 10]

© UCLES 2016

9 The two ends of a metal rod are connected by copper wire to a very sensitive ammeter. The rod is placed horizontally in the horizontal magnetic field between the N-pole and S-pole of a permanent magnet, as shown in Fig. 9.1.

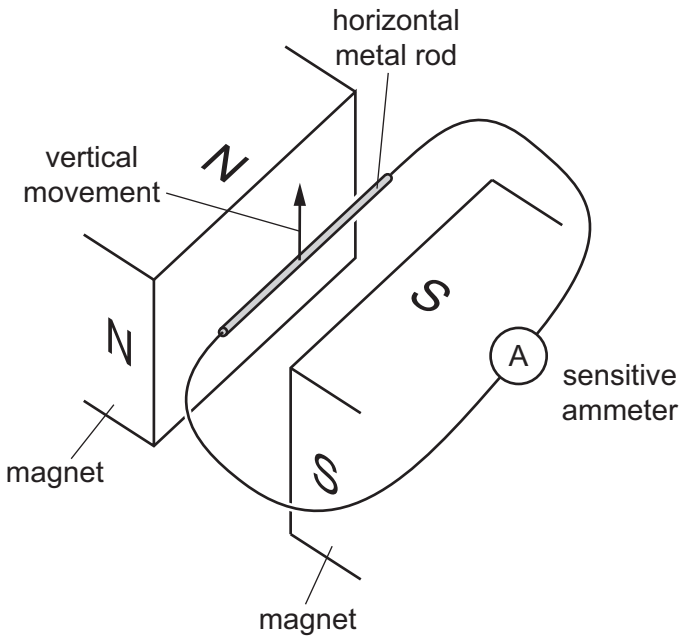

Fig. 9.1

(a) The rod is moved upwards at constant speed in the direction shown by the arrow in Fig. 9.1.

An e.m.f. is induced in the rod.

View solution

(i) State **two** factors that determine the size of the induced e.m.f.

1. .....

2. .....

[2]

(ii) The size of the current in the ammeter depends on the size of the induced e.m.f.

View solution

State **one** other factor that affects the size of the current.

..... [1]

© UCLES 2016

(iii) The direction of motion of the rod is now changed . It moves at a constant speed towards the N-pole, as shown in Fig. 9.2.

View solution

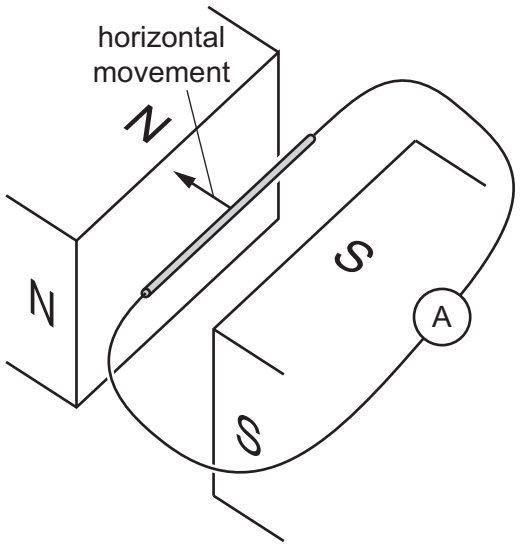

Fig. 9.2

State and explain what happens to the induced e.m.f.

.....

.....

..... [2]

© UCLES 2016

(b) Fig. 9.3 shows a rectangular coil of wire placed in the same horizontal magnetic field.

View solution

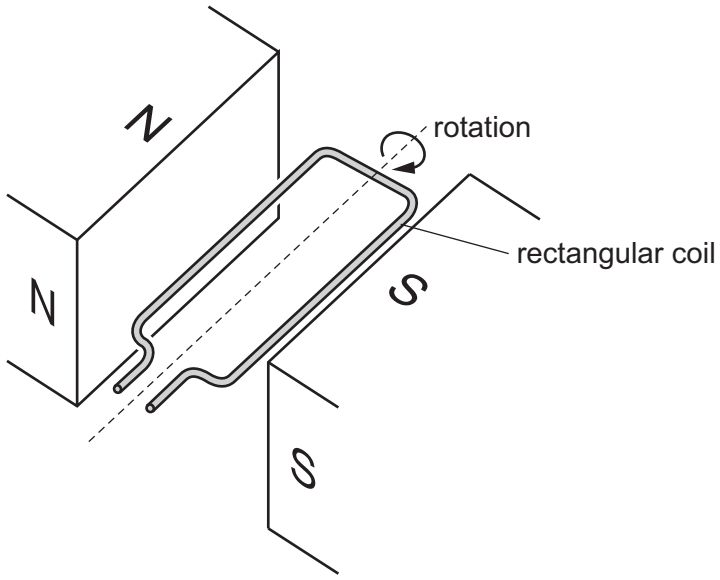

Fig. 9.3

The coil rotates in the direction shown by the arrow in Fig. 9.3. An e.m.f. is induced in the coil.

(i) On Fig. 9.4, sketch a graph to show how the e.m.f. varies with time for **two** complete revolutions of the coil.



Fig. 9.4

[2]

(ii) On your sketch in Fig. 9.4, mark a letter T to indicate a time when the coil is horizontal, as shown in Fig. 9.3.

[1]

[Total: 8]

View solution

© UCLES 2016

10 A sample contains atoms of a particular isotope of protactinium ${}^{X}_{Y}Pa$.

(a) A nucleus of this protactinium isotope contains 91 protons and 143 neutrons.

View solution

(i) State the values of X and Y in the symbol ${}^{X}_{Y}Pa$.

X = ...

Y = ...

[2]

(ii) This isotope is radioactive and it decays by the emission of a β-particle, ${}^{0}_{-1}\beta$, to an isotope of uranium, U.

View solution

Complete the equation for the decay of a protactinium nucleus.

$$\text{.....}^{\text{.....}}_{\text{.....}}Pa \rightarrow {}^{0}_{-1}\beta + \text{.....}^{\text{.....}}_{\text{.....}}U$$

[2]

(b) A radiation detector measures a background count rate in a laboratory of 32 counts / minute.

(i) Suggest **two** naturally occurring sources of background radiation.

View solution

1. .....

2. .....

[2]

(ii) The sample is placed in the laboratory close to the radiation detector, and the count rate increases to 544 counts / minute.

View solution

This isotope of protactinium has a half-life of 400 minutes.

Predict a value for the count rate measured 1200 minutes later.

count rate = ... [4]

© UCLES 2016

(iii) Suggest one reason why the count rate measured 1200 minutes later may differ slightly from the value predicted in **(b)(ii)**.

.....

View solution

..... [1]

[Total: 11]

© UCLES 2016

BLANK PAGE

© UCLES 2016

BLANK PAGE

Permission to reproduce items where third-party owned material protected by copyright is included has been sought and cleared where possible. Every reasonable effort has been made by the publisher (UCLES) to trace copyright holders, but if any items requiring clearance have unwittingly been included, the publisher will be pleased to make amends at the earliest possible opportunity.

To avoid the issue of disclosure of answer-related information to candidates, all copyright acknowledgements are reproduced online in the Cambridge International Examinations Copyright Acknowledgements Booklet. This is produced for each series of examinations and is freely available to download at www.cie.org.uk after the live examination series.

Cambridge International Examinations is part of the Cambridge Assessment Group. Cambridge Assessment is the brand name of University of Cambridge Local Examinations Syndicate (UCLES), which is itself a department of the University of Cambridge.

© UCLES 2016