Cambridge IGCSE

Cambridge International Examinations
Cambridge International General Certificate of Secondary Education

CANDIDATE NAME									
CENTRE NUMBER						CANDIDATE NUMBER				

PHYSICS **0625/51**

Paper 5 Practical Test **May/June 2016**

1 hour 15 minutes

Candidates answer on the Question Paper.

Additional Materials: As listed in the Confidential Instructions

READ THESE INSTRUCTIONS FIRST

Write your Centre number, candidate number and name in the spaces at the top of the page.
Write in dark blue or black pen.
You may use an HB pencil for any diagrams or graphs.
Do not use staples, paper clips, glue or correction fluid.
DO **NOT** WRITE IN ANY BARCODES.

Answer **all** questions.
You are advised to spend about 20 minutes on each of questions 1 to 3, and 15 minutes on question 4.
Electronic calculators may be used.
You may lose marks if you do not show your working or if you do not use appropriate units.

At the end of the examination, fasten all your work securely together.
The number of marks is given in brackets [ ] at the end of each question or part question.

For Examiner's Use	
1	
2	
3	
4	
Total	

The syllabus is approved for use in England, Wales and Northern Ireland as a Cambridge International Level 1/Level 2 Certificate.

This document consists of **10** printed pages and **2** blank pages.

© UCLES 2016

CAMBRIDGE International Examinations

1 In this experiment, you will determine the weight of a metre rule using a balancing method.

Carry out the following instructions, referring to Fig. 1.1.

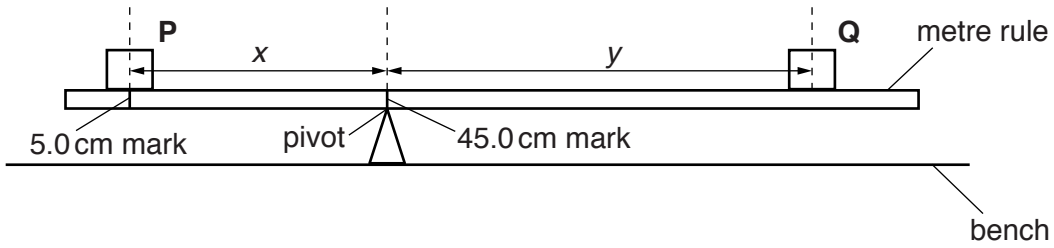

Fig. 1.1

(a)
- Place load **P** on the metre rule at the 5.0 cm mark. Place the metre rule on the pivot at the 45.0 cm mark. Place load **Q** on the rule and adjust its position so that the metre rule is as near as possible to being balanced.

View solution

- Record, in Table 1.1, the distance *x* between the centre of load **P** and the pivot.
- Measure, and record in the table, the distance *y* from the centre of load **Q** to the pivot.
- Calculate $A = Px$, where $P = 1.00\,\text{N}$. Record the value in the table. *P* is the weight of load **P**.
- Calculate $B = Qy$, where $Q = 0.80\,\text{N}$. Record the value in the table. *Q* is the weight of load **Q**.
- Repeat the steps above, placing the load **P** at the 10.0 cm mark, 15.0 cm mark, 20.0 cm mark and 25.0 cm mark. **Keep the pivot at the 45.0 cm mark each time.** Record all the readings and values of *A* and *B* in the table.

Table 1.1

x/cm	*y*/cm	*A*/N cm	*B*/N cm

[3]

(b) Plot a graph of A/N cm (y-axis) against B/N cm (x-axis). Start both axes at the origin (0,0).

View solution

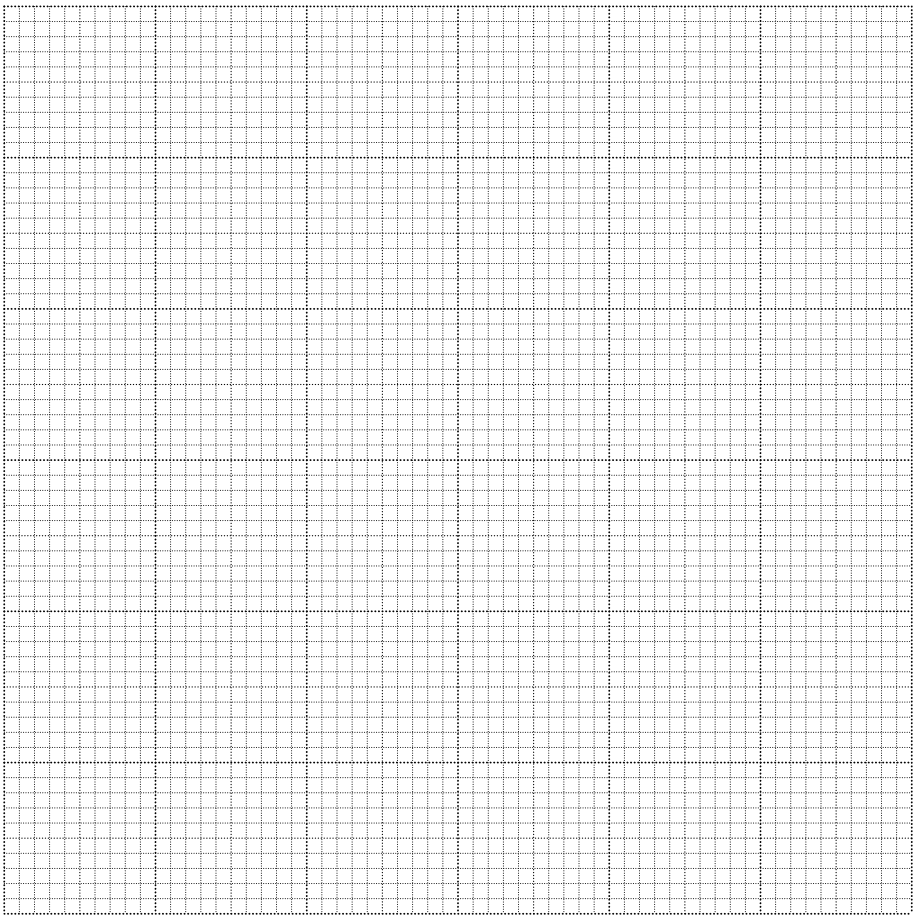

[4]

(c) Use the graph to determine the vertical intercept Y, the value of A when $B = 0$ N cm. Show clearly on the graph how you obtained this value.

View solution $Y =$ ..... [1]

(d) Calculate the weight W of the metre rule using the equation $W = \frac{Y}{z}$, where $z = 5.0$ cm.

View solution

$W =$ ..... [1]

(e) Suggest one practical reason why it is difficult to obtain exact results with this experiment.

View solution

.....

..... [1]

(f) Use the balance provided to measure the mass of the metre rule.

View solution

mass = ... [1]

[Total: 11]

© UCLES 2016

2 In this experiment, you will investigate the resistance of a lamp filament.

Carry out the following instructions, referring to Fig. 2.1. The circuit is set up for you.

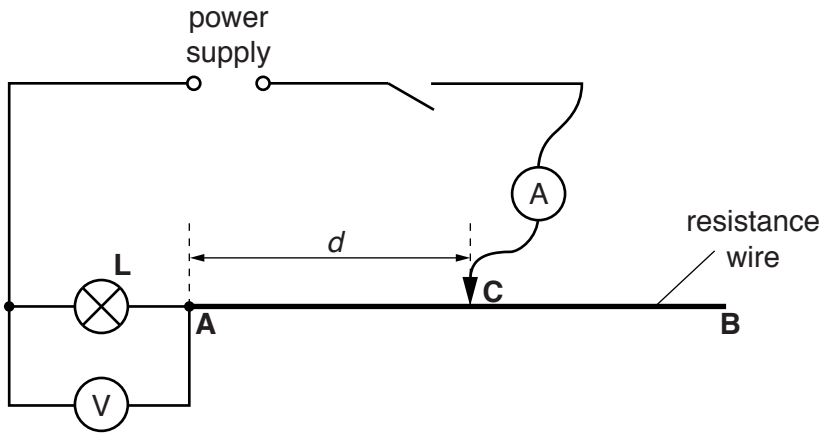

Fig. 2.1

(a) • Switch on. Place the sliding contact **C** on the resistance wire at a distance $d = 0.200\,\text{m}$ from point **A**.

• Measure and record in Table 2.1 the current I in the circuit and the p.d. V across the lamp **L**. Switch off.

View solution

• Calculate the resistance R of the lamp filament, using the equation $R = \frac{V}{I}$.

• Repeat the procedure using values for d of 0.400 m, 0.600 m and 0.800 m.

• Complete the column headings in the table.

Table 2.1

d/	V/	I/	R/
0.200			
0.400			
0.600			
0.800			

[4]

© UCLES 2016

(b) A student suggests that the resistance R of the lamp filament should be constant.

State and explain whether your results show that R is constant within the limits of experimental accuracy.

statement .....

explanation .....

.....

.....

[2]

(c) Suggest, referring to a practical observation, a reason why the resistance R may not be constant in this experiment.

.....

.....

..... [2]

(d) **(i)** Name an electrical component that could be used, in place of the resistance wire **AB** and sliding contact, to vary the current I.

..... [1]

(ii) Draw a diagram of the circuit including this component in place of the resistance wire and sliding contact.

View solution

[2]

[Total: 11]

© UCLES 2016

3 In this experiment, you will determine the focal length of a lens by two different methods.

Method 1

(a) Set up the apparatus as shown in Fig. 3.1.

View solution

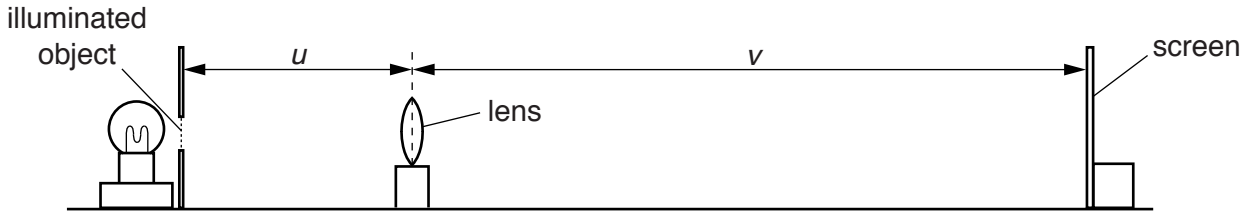

Fig. 3.1

(i)
- Place the lens at a distance $u = 50.0$ cm from the illuminated object.
- Move the screen until a sharply focused image of the object is seen on the screen.
- Measure and record the distance v from the screen to the centre of the lens.

$v =$ ..... cm [1]

(ii) Calculate a value f_1 for the focal length of the lens, using the equation $f_1 = \dfrac{uv}{(u + v)}$.

View solution

$f_1 =$ ..... [1]

(b) (i)
- Place the lens at a distance $u = 60.0$ cm from the illuminated object. Move the screen until a sharply focused image of the object is seen on the screen.
- Measure and record the distance v from the screen to the centre of the lens.

View solution

$v =$ ..... cm [1]

(ii) Calculate a value f_2 for the focal length of the lens using the equation $f_2 = \dfrac{uv}{(u + v)}$.

View solution

$f_2 =$ ..... [1]

© UCLES 2016

(c) Calculate the average value f_A for the focal length of the lens. Show your working.

View solution

f_A = ... [1]

Method 2

View solution

(d)
- Remove the screen.
- Place the lens about 25 cm from the object.
- Place the mirror close to the lens, as shown in Fig. 3.2.

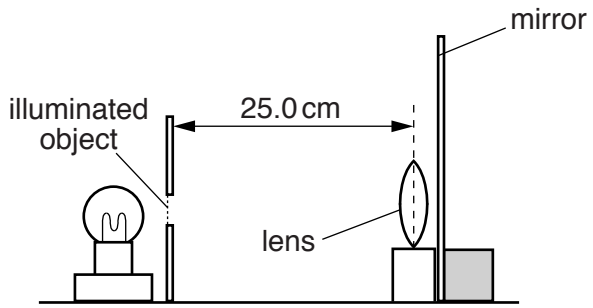

Fig. 3.2

- Move the lens slowly towards the object until a sharply focused image is obtained close to the object, as shown in Fig. 3.3.

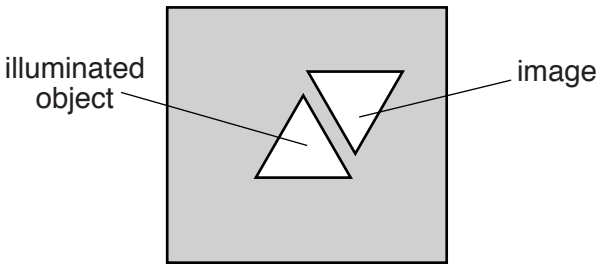

Fig. 3.3

- Measure the distance f_3 between the lens and the object. This is the focal length of the lens.

f_3 = ... [2]

© UCLES 2016

(e) (i)

- Remove the mirror.
- Place the lens a distance $x = 2f_3$ from the illuminated object. Record the value of x.

$x =$ .....

- Place the screen the same distance $x = 2f_3$ from the centre of the lens. The lens must be between the illuminated object and the screen.
- Carefully adjust the position of the screen until a sharply focused image of the object is seen on the screen.
- Measure the distance y between the centre of the lens and the screen.

View solution

$y =$ .....

[1]

(ii) Calculate the difference $x - y$.

View solution

$x - y =$ ..... [1]

(f) State two precautions that should be taken in this experiment to obtain reliable results.

View solution

1. .....

.....

2. .....

.....

[2]

[Total: 11]

© UCLES 2016

BLANK PAGE

© UCLES 2016

4 A student is investigating the effect of insulation on the rate of cooling of hot water in a 250 cm^3 container.

View solution

The student can choose from the following apparatus:

thermometer
250 cm^3 glass beaker
250 cm^3 plastic beaker
250 cm^3 copper can
250 cm^3 measuring cylinder
three different insulating materials
clamp, boss and stand
stopwatch.

Plan an experiment to investigate the effectiveness of the three insulating materials. You are **not** required to carry out this investigation.

You should

- explain briefly how you would carry out the investigation,
- state the key variables that you would control,
- draw a table or tables, with column headings, to show how you would display your readings. You are not required to enter any readings in the table,
- explain how you would use your readings to reach a conclusion.

A diagram is not required but you may draw a diagram if it helps your explanation.

.....

.....

© UCLES 2016

.....

.....

.....

BLANK PAGE

Permission to reproduce items where third-party owned material protected by copyright is included has been sought and cleared where possible. Every reasonable effort has been made by the publisher (UCLES) to trace copyright holders, but if any items requiring clearance have unwittingly been included, the publisher will be pleased to make amends at the earliest possible opportunity.

To avoid the issue of disclosure of answer-related information to candidates, all copyright acknowledgements are reproduced online in the Cambridge International Examinations Copyright Acknowledgements Booklet. This is produced for each series of examinations and is freely available to download at www.cie.org.uk after the live examination series.

Cambridge International Examinations is part of the Cambridge Assessment Group. Cambridge Assessment is the brand name of University of Cambridge Local Examinations Syndicate (UCLES), which is itself a department of the University of Cambridge.

© UCLES 2016