Cambridge IGCSE

Cambridge International Examinations
Cambridge International General Certificate of Secondary Education

CANDIDATE NAME									
CENTRE NUMBER						CANDIDATE NUMBER			

PHYSICS **0625/32**

Paper 3 Theory (Core) **May/June 2017**

1 hour 15 minutes

Candidates answer on the Question Paper.

No Additional Materials are required.

READ THESE INSTRUCTIONS FIRST

Write your Centre number, candidate number and name on all the work you hand in.
Write in dark blue or black pen.
You may use an HB pencil for any diagrams or graphs.
Do not use staples, paper clips, glue or correction fluid.
DO **NOT** WRITE IN ANY BARCODES.

Answer **all** questions.
Electronic calculators may be used.
You may lose marks if you do not show your working or if you do not use appropriate units.
Take the weight of 1.0 kg to be 10 N (acceleration of free fall = 10 m/s^2).

At the end of the examination, fasten all your work securely together.
The number of marks is given in brackets [ ] at the end of each question or part question.

The syllabus is approved for use in England, Wales and Northern Ireland as a Cambridge International Level 1/Level 2 Certificate.

This document consists of **19** printed pages and **1** blank page.

© UCLES 2017

CAMBRIDGE International Examinations

1 Fig. 1.1 shows students about to start a 50.0 m swimming race.

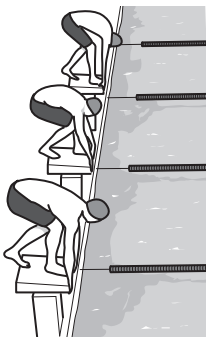

Fig. 1.1

(a) The length of the pool is 50.0 m.

View solution

Name a suitable piece of equipment that could be used to measure the length of the pool.

.....[1]

(b) The race starts and the students swim to the end of the 50.0 m pool.

Fig. 1.2 shows the times recorded on the stop watches for the winner and the swimmer in second place.

View solution



Fig. 1.2

(i) Determine the time taken by the winner to swim 50.0 m. Use information from Fig. 1.2.

winner's time = ... s [1]

(ii) Calculate the average speed of the winner.

View solution

average speed = ... m/s [2]

(iii) Calculate the time difference between the winner and the swimmer in second place.

View solution

time difference = ... s [1]

[Total: 5]

© UCLES 2017

2 **(a)** The walls of a room are to be painted.

View solution

A tin of paint has a total mass of 7000 g and a volume of 5000 cm^3.

The empty tin has a mass of 500 g.

(i) Determine the mass of the paint.

mass of paint = ... g [1]

(ii) Calculate the density of the paint. Include the unit.

View solution

density = ... [3]

(b) The painter drops a brush into the tin of paint. The brush floats.

View solution

Suggest why the brush floats.

.....

.....[1]

[Total: 5]

3 Fig. 3.1 shows a large sunshade.

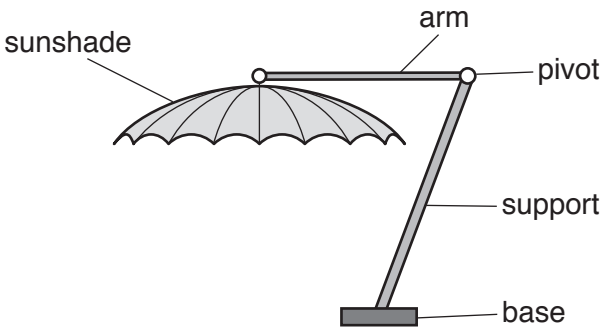

Fig. 3.1

The arm holding the sunshade pivots about the end of a support.

(a) The sunshade has a mass of 20.0 kg.

View solution

Calculate the weight of the sunshade.

weight = ... N [3]

(b) (i) Another sunshade is shown in Fig. 3.2.
This sunshade weighs 180 N.
The arm holding the sunshade extends 2.5 m from the pivot.

View solution

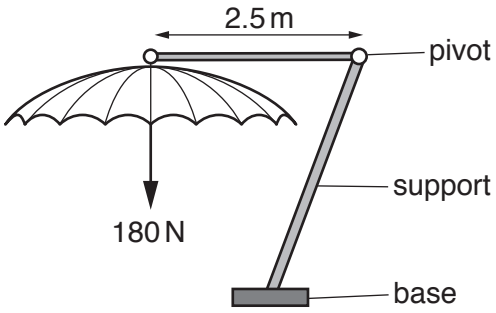

Fig. 3.2

Calculate the moment of the sunshade about the pivot.

moment = ... N m [3]

(ii) How can the moment produced by the sunshade be reduced? Tick **one** box.

View solution

- ☐ by decreasing the height of the support
- ☐ by decreasing the length of the arm holding the sunshade
- ☐ by increasing the weight of the base
- ☐ by increasing the weight of the sunshade

[1]

[Total: 7]

© UCLES 2017

4 A house has white wooden walls and a black wooden door, as shown in Fig. 4.1.

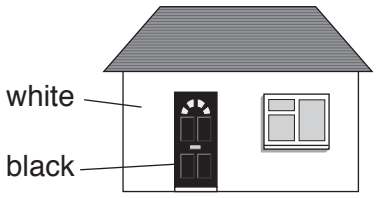

Fig. 4.1

View solution

(a) The Sun is shining on the door and the front wall of the house.

(i) State the name of the process by which thermal energy is transferred from the Sun to the Earth.

.....[1]

(ii) Fig. 4.2 shows part of the white wall and the black door of the house. Two thermometers have been attached, one to the wall and the other to the door.

View solution

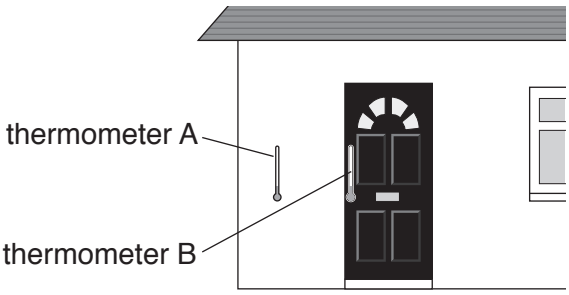

Fig. 4.2

Thermometer A measures the temperature of the white wall. Thermometer B measures the temperature of the black door.

The thermometer readings are recorded after the Sun has been shining on the house for some time.

Suggest which thermometer has the higher temperature and explain why.

higher temperature .....

explanation .....

.....

.....

.....[3]

© UCLES 2017

(b) The air conditioning unit inside a room in the house is switched on. The air conditioning unit takes in warm air and gives out cold air, as shown in Fig. 4.3.

View solution

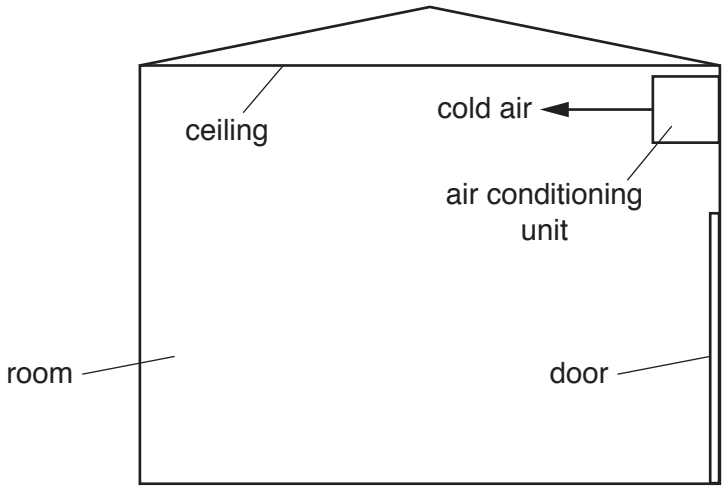

Fig. 4.3

Explain how the air conditioning unit cools all the air in the room.

.....

.....

.....

.....

.....[3]

[Total: 7]

5 **(a)** A potato snack packet is taken onto an aeroplane. During the flight the pressure inside the aeroplane changes and the potato snack packet changes shape, as shown in Fig. 5.1.

View solution

potato snack packet before flight



potato snack packet during flight

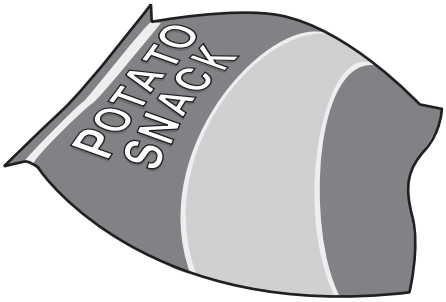

Fig. 5.1

Explain why the packet changes shape. Use ideas about the gas molecules inside and outside the packet in your answer.

.....

.....

.....

.....

.....

.....[2]

(b) A deep-sea diver on a diving-boat experiences atmospheric pressure. When she is working underwater, she experiences an increased pressure.

View solution

State **two** factors that affect the size of the increased pressure.

1. .....

2. .....

[2]

(c) Fig. 5.2 shows a device used for measuring atmospheric pressure.

View solution

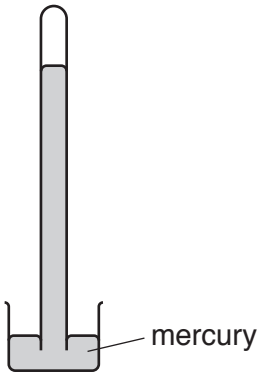

Fig. 5.2

(i) State the name of the device shown in Fig. 5.2.

.....[1]

(ii) Fig. 5.3 shows a manometer connected to a gas supply. The pressure of the gas supply is greater than atmospheric pressure. Atmospheric pressure is equal to 1033.6 cm of water.

View solution

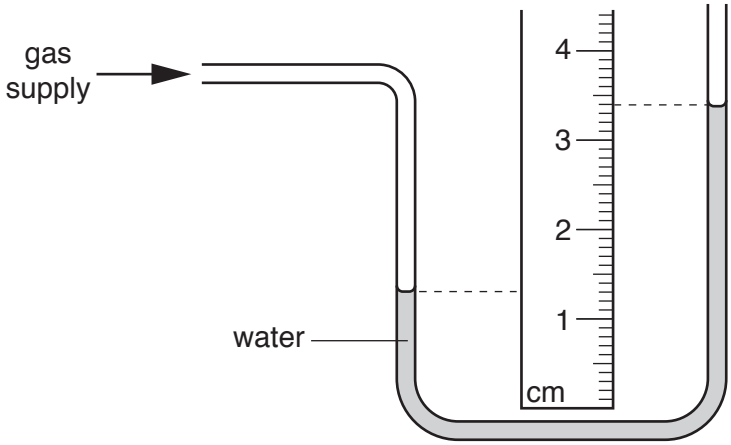

Fig. 5.3

Determine the pressure of the gas supply.

pressure = ... cm of water [3]

[Total: 8]

6 **(a)** Fig. 6.1 shows an overhead view of two cars approaching a road junction. A plane mirror helps the drivers to see other cars.

View solution

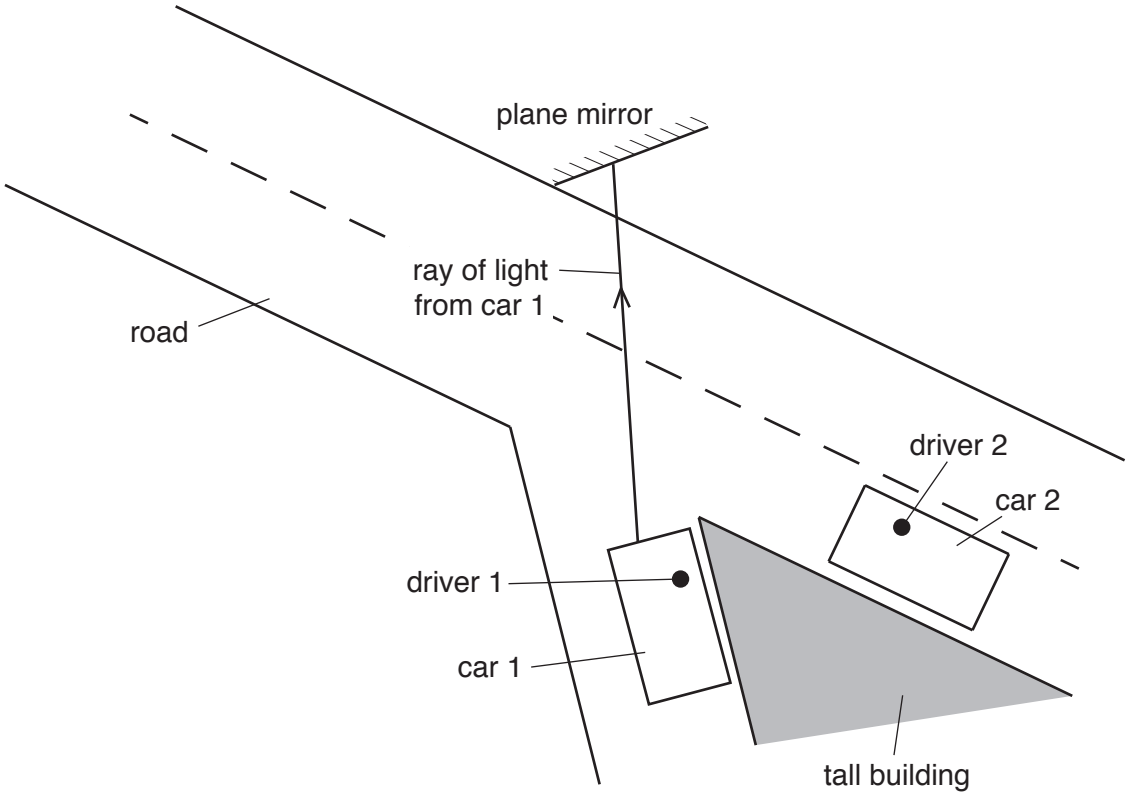

Fig. 6.1

(i) A ray of light from car 1 is shown.

On Fig. 6.1, clearly draw the normal to the plane mirror where this ray hits the plane mirror. Label the normal N. [1]

(ii) On Fig. 6.1, carefully draw the reflected ray of light. [1]

(iii) State the law used in your answer to **(a)(ii)**.

.....[1]

(iv) Can each driver see the other car?

.....

Explain your answer.

.....[1]

© UCLES 2017

(b) Fig. 6.2 shows a ray of light incident on a glass block.

View solution

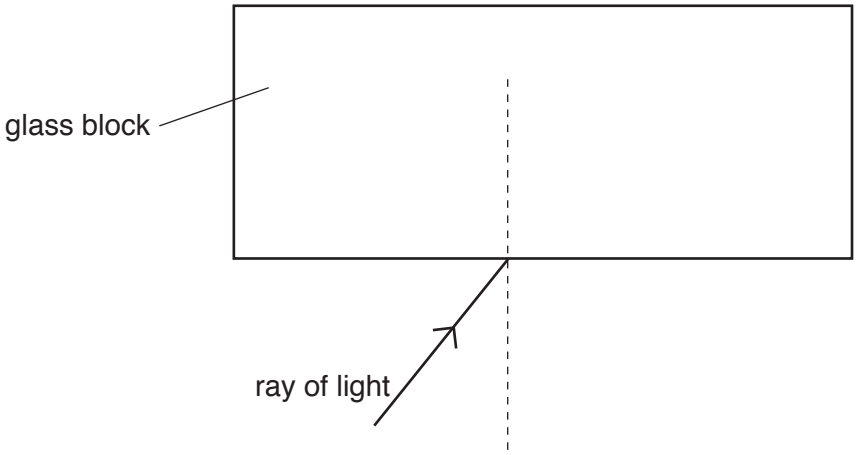

Fig. 6.2

(i) On Fig. 6.2, continue the path of the ray into the block. [1]

(ii) On Fig. 6.2, clearly label the angle of incidence *i* and the angle of refraction *r*. [2]

[Total: 7]

View solution

7 Fig. 7.1 shows the regions of the electromagnetic spectrum.

radio waves	microwaves	infra-red waves	1	ultraviolet waves	X-rays	2

Fig. 7.1

(a) **(i)** Give the names of the two regions that are labelled 1 and 2.

View solution

1. .....

2. .....

[2]

(ii) Use words from the box to complete the sentence.

acceleration	amplitude	frequency	speed	wavelength

Compared with other regions in the electromagnetic spectrum, radio waves have the largest ..... and the smallest ..... . [2]

(b) Sound is not an electromagnetic wave.

View solution

Give **one** other way in which sound waves are different from radio waves.

.....[1]

(c) Two students, X and Y, carry out an experiment to determine the speed of sound in air.

View solution

X has two blocks of wood that make a loud, sharp sound when banged together.
Y has a tape measure and a stopwatch.

Describe how X and Y can use the equipment to measure the speed of sound in air.

.....

.....

.....

.....

.....

.....[4]

[Total: 9]

© UCLES 2017

8 **(a)** Fig. 8.1 shows a bar magnet.

View solution



Fig. 8.1

On Fig. 8.1, draw lines to show the shape of the magnetic field around the bar magnet. Include at least **one** arrow to show the direction of the field. [3]

(b) Explain how a coil of wire can be used to create a bar magnet from a suitable piece of metal.

.....

.....

.....[2]

(c) Which of these metals could be used to make a bar magnet? Tick **one** box.

View solution

- ☐ aluminium
- ☐ copper
- ☐ soft iron
- ☐ steel

[1]

[Total: 6]

9 Fig. 9.1 shows a current-carrying coil in a magnetic field.

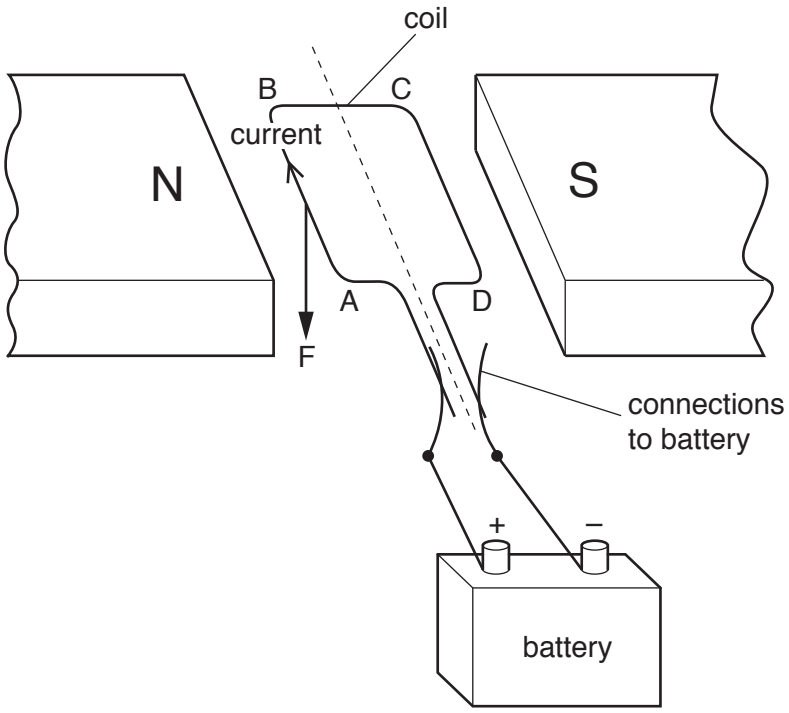

Fig. 9.1

The direction of the current in side AB of the coil is labelled.
The force F on side AB is also labelled.

(a) On Fig. 9.1, draw

View solution

- an arrow labelled X, on side CD, to show the direction of the current in this side of the coil,
- an arrow labelled P, to show the direction of the force on CD.

[2]

(b) Give **two** ways of increasing the forces F and P on the sides of the coil.

View solution

1. .....

.....

2. .....

.....

[2]

(c) (i) Name the particles that flow in the metal wire of the coil.

.....[1]

(ii) The wire of the coil is replaced by a thinner wire. This wire is the same length and is made of the same metal.

State and explain how this changes the current in the coil.

View solution

.....

.....

.....[2]

[Total: 7]

10 A student wants to investigate how the resistance of a light-dependent resistor (LDR) varies with the brightness of the light in the room.

View solution

(a) To investigate this, the student connects the circuit shown in Fig. 10.1.

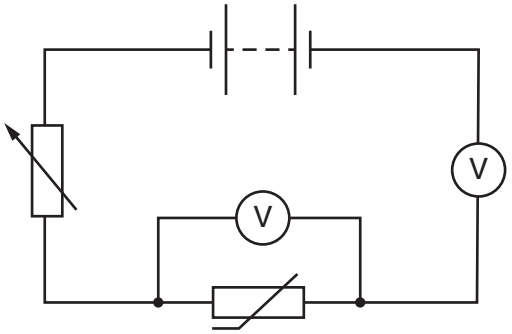

Fig. 10.1

The student has made three errors.

Identify the **three** errors in the student's circuit.

1. .....

.....

2. .....

.....

3. .....

.....

[3]

© UCLES 2017

(b) The student corrects the errors. His results are shown in Fig. 10.2.

View solution

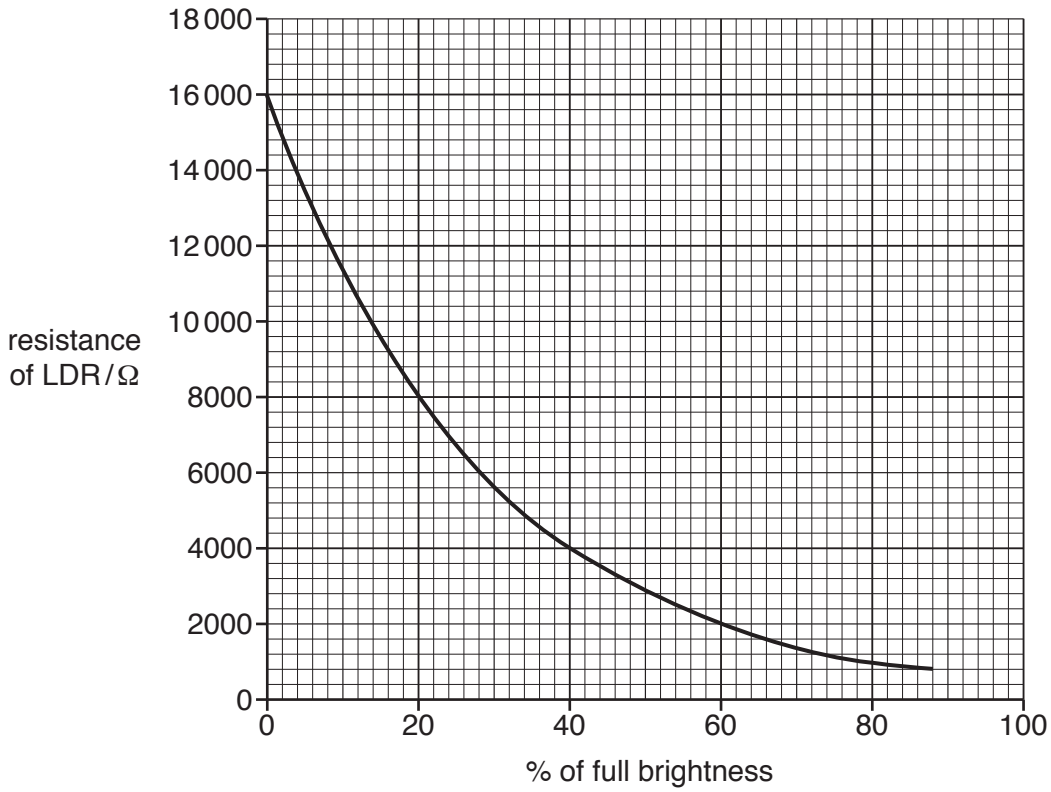

Fig. 10.2

(i) Use the information in Fig. 10.2 to describe how the brightness of the light in the room affects the resistance of the LDR.

.....

.....[1]

(ii) The potential difference across the LDR is 8.0 V.

View solution

Calculate the current in the LDR when the light is 60% of full brightness.

current = ... A [4]

[Total: 8]

11 **(a)** The plug for a television contains a fuse.

View solution

Explain the purpose of the fuse.

.....

.....

.....[2]

(b) The circuit of the television includes transformers.

View solution

(i) State the metal used for the two coils of each transformer.

.....[1]

(ii) One transformer has an input voltage of 224 V and an output voltage of 16.0 V. The input coil contains 308 turns.

View solution

Calculate the number of turns on the output coil.

number of turns = ... [3]

[Total: 6]

© UCLES 2017

12 Fig. 12.1 represents the particles in an atom of the element lithium.

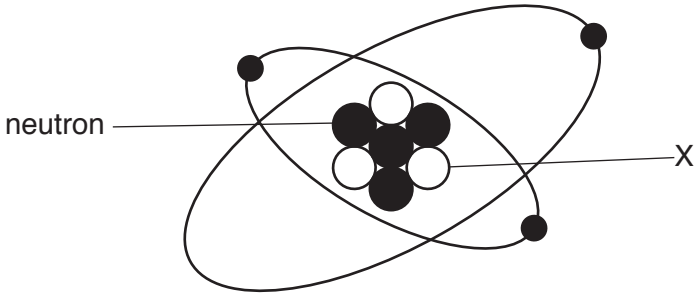

Fig. 12.1 (not to scale)

(a) (i) State the name of particle X.

View solution

.....[1]

(ii) State the charge of particle X.

View solution

.....[1]

(iii) Tick **one** box in Fig. 12.2 that correctly represents an isotope of lithium.

View solution

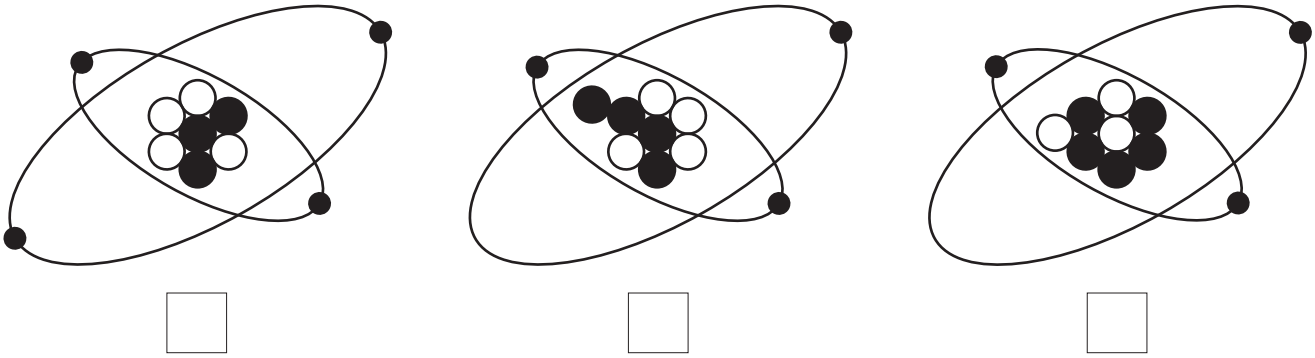

Fig. 12.2 [1]

(b) A sample of lithium contains 1.00 mg of a radioactive isotope of lithium.

View solution

Calculate the mass of the isotope that remains after 2 half-lives.

mass = ... mg [2]

[Total: 5]

© UCLES 2017

BLANK PAGE

Permission to reproduce items where third-party owned material protected by copyright is included has been sought and cleared where possible. Every reasonable effort has been made by the publisher (UCLES) to trace copyright holders, but if any items requiring clearance have unwittingly been included, the publisher will be pleased to make amends at the earliest possible opportunity.

To avoid the issue of disclosure of answer-related information to candidates, all copyright acknowledgements are reproduced online in the Cambridge International Examinations Copyright Acknowledgements Booklet. This is produced for each series of examinations and is freely available to download at www.cie.org.uk after the live examination series.

Cambridge International Examinations is part of the Cambridge Assessment Group. Cambridge Assessment is the brand name of University of Cambridge Local Examinations Syndicate (UCLES), which is itself a department of the University of Cambridge.

© UCLES 2017