Cambridge IGCSE

Cambridge International Examinations
Cambridge International General Certificate of Secondary Education

CANDIDATE NAME									
CENTRE NUMBER						CANDIDATE NUMBER			

PHYSICS **0625/33**

Paper 3 Theory (Core) **May/June 2017**

1 hour 15 minutes

Candidates answer on the Question Paper.

No Additional Materials are required.

READ THESE INSTRUCTIONS FIRST

Write your Centre number, candidate number and name on all the work you hand in.
Write in dark blue or black pen.
You may use an HB pencil for any diagrams or graphs.
Do not use staples, paper clips, glue or correction fluid.
DO **NOT** WRITE IN ANY BARCODES.

Answer **all** questions.
Electronic calculators may be used.
You may lose marks if you do not show your working or if you do not use appropriate units.
Take the weight of 1.0 kg to be 10 N (acceleration of free fall = 10 m/s^2).

At the end of the examination, fasten all your work securely together.
The number of marks is given in brackets [ ] at the end of each question or part question.

The syllabus is approved for use in England, Wales and Northern Ireland as a Cambridge International Level 1/Level 2 Certificate.

This document consists of **16** printed pages.

© UCLES 2017

CAMBRIDGE International Examinations

1 A student measures a book.

(a) He measures the length of the book, as shown in Fig. 1.1.

View solution

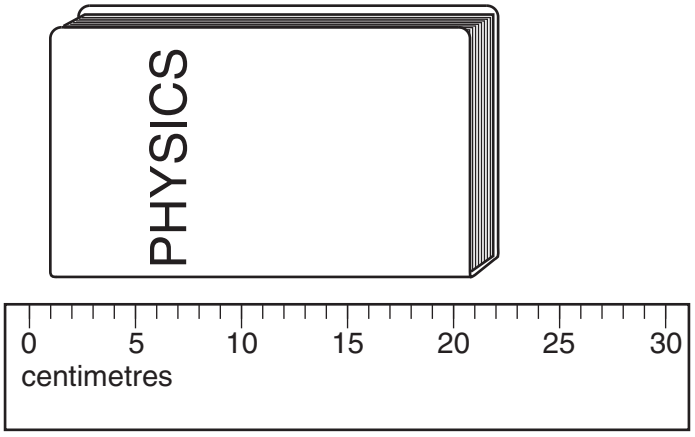

Fig. 1.1

The student records his measurement.

length of book = 19.9 cm

His measurement is not accurate.

Describe **two** ways that the student can improve the accuracy of his measurement.

1. .....

.....

2. .....

.....

[2]

(b) The book contains 200 thin sheets of paper.
The student wants to find the average (mean) thickness of a sheet of paper in the book.

View solution

Describe how he can determine such a small distance using only a ruler.

.....

.....

.....

.....

.....[3]

(c) The book has a mass of 400 g.

Calculate the weight of the book. Include the unit.

View solution

weight = ...[4]

[Total: 9]

2 A student has a laptop computer. The computer is powered by a battery.

(a) State the word used to describe the energy stored in the battery.

View solution

.....[1]

(b) The student opens the laptop using a force of 3.0 N, as shown in Fig. 2.1.

View solution

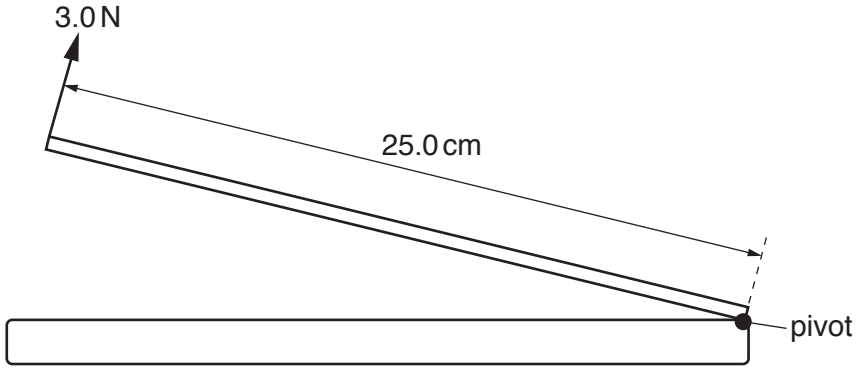

Fig. 2.1

(i) Calculate the moment of the 3.0 N force about the pivot.

moment = ... N cm [3]

(ii) The student does work as he opens the laptop.

View solution

Explain how the principle of conservation of energy applies to this example.

.....

.....[2]

(c) The student is in a country with many hours of sunshine each day. He charges his laptop using a solar panel.

Give **two** advantages of using a solar panel, compared with using a mains electrical supply.

1. .....

2. .....

[2]

(d) A mains battery charger has a power output of 80 W.
The solar panel has a power output of 16 W.

View solution

Describe **one** disadvantage of using the solar panel, compared with using the mains battery charger.

.....[1]

[Total: 9]

© UCLES 2017

3 A woman drives a car from town A to town B. She stops at a garage during her journey.

The distance-time graph for the journey is shown in Fig. 3.1.

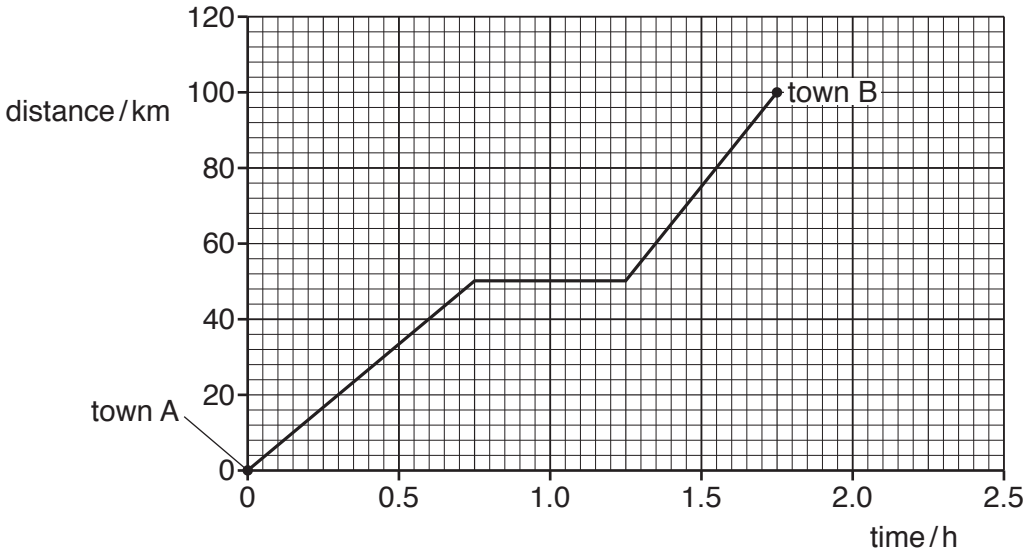

Fig. 3.1

(a) **(i)** Determine the total time for the whole journey.

View solution

time = ... h [1]

(ii) Determine the time for which the car is not moving.

View solution

time = ... h [1]

(iii) Determine the distance between town A and town B.

View solution

distance = ... km [1]

(iv) Calculate the average speed of the car between 0 and 0.75 h.

View solution

average speed = ... km / h [3]

(b) The speed of the car before stopping at the garage is different from its speed after stopping at the garage.

Describe this difference in speed and explain how the graph in Fig. 3.1 shows it.

View solution

.....

.....

.....[2]

[Total: 8]

© UCLES 2017

4 Fig. 4.1 shows a car tyre in contact with the road.

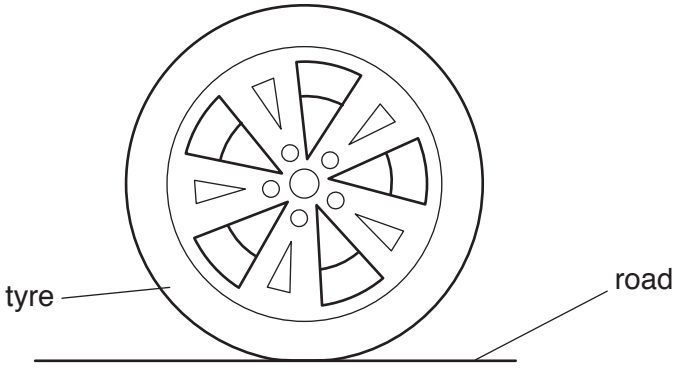

Fig. 4.1

The area of tyre in contact with the road is $0.015\,m^2$.
The tyre exerts a pressure on the road of $240\,kN/m^2$.

(a) Calculate the force on the road from the tyre.

View solution

force = ... N [4]

(b) The tyre is filled with air at high pressure.

Use ideas about molecules to explain how this air exerts a pressure on the inside of the tyre.

.....

.....

.....

.....

.....

.....

.....[3]

[Total: 7]

View solution

© UCLES 2017

5 A nuclear power station generates electricity.

(a) The main stages in the operation of a nuclear power station are listed below. They are **not** in the correct order.

View solution

A the turbine turns a generator

B fission produces thermal energy

C water in the boiler becomes hot

D steam turns a turbine

E nuclei split apart in the reactor

F electromagnetic induction produces the output energy

G steam is produced

Complete the flow chart to describe how a nuclear power station works. Insert the missing letters in the empty boxes.

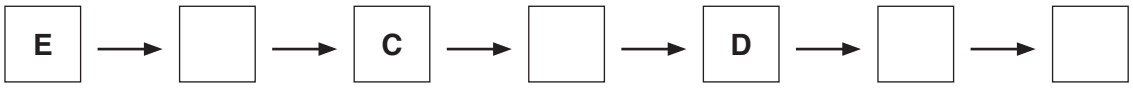

[3]

(b) Some people are opposed to the use of nuclear power stations.

View solution

Give **two** disadvantages of using nuclear power stations.

1. .....

.....

2. .....

.....

[2]

(c) One use of electricity is to turn an electric motor.
The efficiency of an electric motor is always less than 100%.

View solution

State the meaning of the term *efficiency*.

.....

.....[2]

[Total: 7]

6 **(a)** The diagrams in Fig. 6.1 show *reflection*, *refraction* and *diffraction*.

View solution

On Fig. 6.1, write the correct word next to each diagram for the process shown.

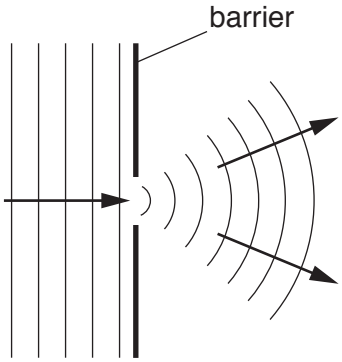

.....

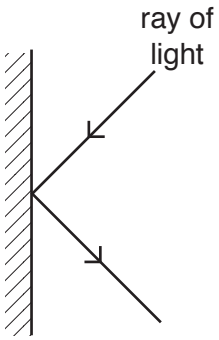

.....

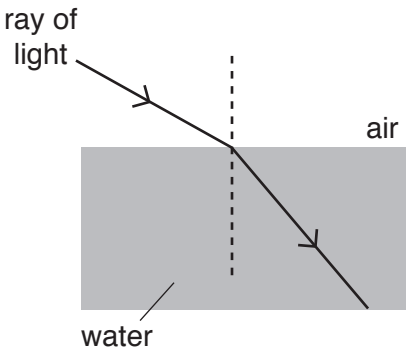

.....

Fig. 6.1

[3]

(b) Fig. 6.2 shows a transverse wave.

View solution

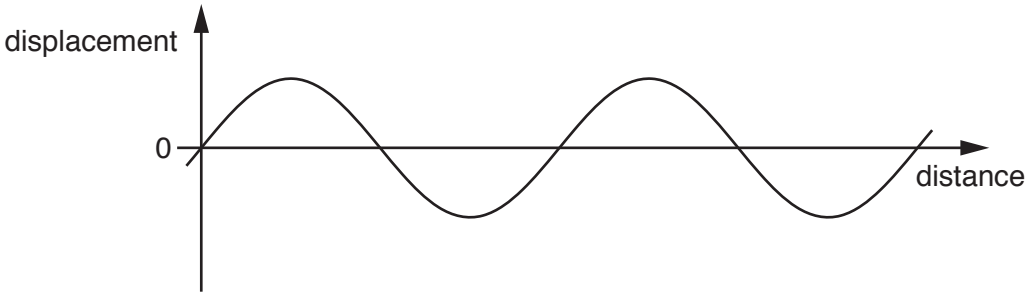

Fig. 6.2

(i) On Fig. 6.2, label the amplitude of the wave. [1]

(ii) On Fig. 6.2, label the wavelength of the wave. [1]

(c) A thin converging lens forms an image of an object, as shown in Fig. 6.3.

View solution

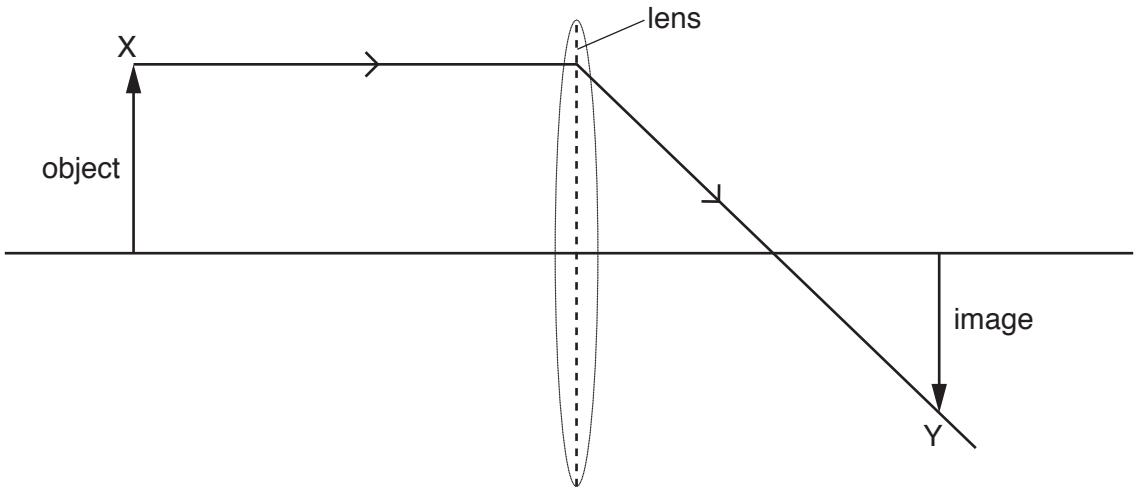

Fig. 6.3

Only one ray is shown in Fig. 6.3.

On Fig. 6.3, draw **two** more rays from point X on the object that can be used to locate point Y on the image. [2]

[Total: 7]

7 A sound wave is a longitudinal wave.

Fig. 7.1 shows a spring being used to demonstrate a longitudinal wave.

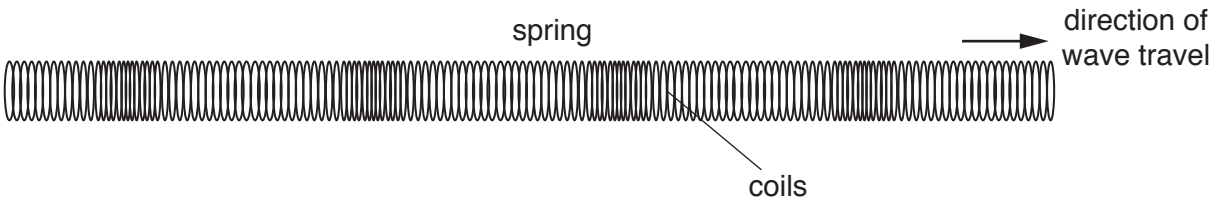

Fig. 7.1

View solution

(a) The coils of the spring vibrate.

Draw **two** arrows on Fig. 7.1 to show the directions of the vibrations. [2]

View solution

(b) Through which of these is sound **not** able to travel? Tick **one** box.

- ☐ air
- ☐ steel
- ☐ vacuum
- ☐ water

[1]

(c) **(i)** Very old people cannot hear the highest frequencies of sound that can be heard by young people.

Suggest the highest frequency that very old people can hear.

View solution

.....[2]

(ii) State the meaning of the term *ultrasound*.

.....[1]

[Total: 6]

View solution

8 A theatre has three coloured lamps. Fig. 8.1 shows the circuit for the coloured lamps. It is **not** complete.

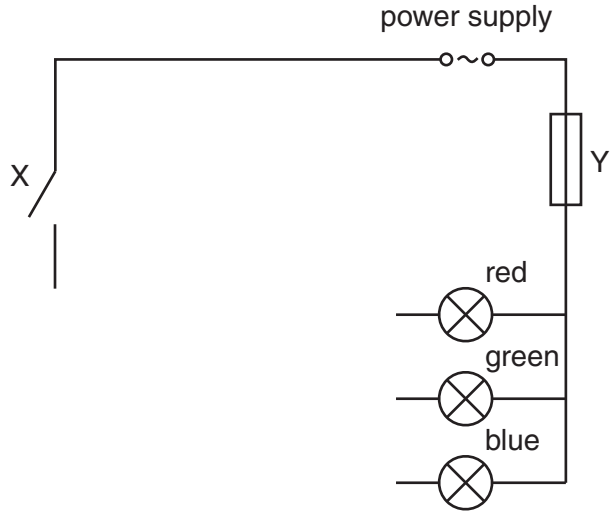

Fig. 8.1

(a) The circuit needs additional components so that

View solution

- each lamp can be switched on and off separately,
- the brightness of each lamp can be changed.

Complete the circuit diagram in Fig. 8.1. [3]

(b) Suggest the purpose of switch X.

View solution

.....[1]

(c) State the name of component Y **and** describe how it works.

View solution

name .....

description .....

.....

.....

.....

.....[3]

[Total: 7]

9 **(a)** A student has four similar metal bars. Two of the bars are permanent magnets, one is a bar of unmagnetised iron and the other is a bar of tin.

In four different experiments, the bars are placed end-to-end in pairs, as shown in Fig. 9.1.

View solution

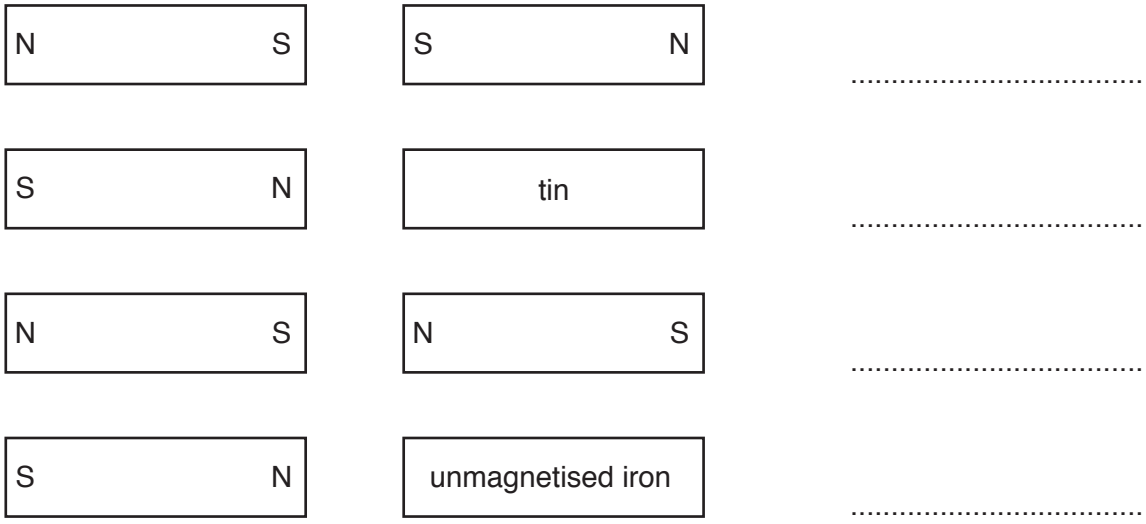

Fig. 9.1

State what happens to each pair of metal bars. Choose from the words attract, repel and no effect. You may use each word once, more than once or not at all. [2]

(b) The magnetic properties of soft iron and steel are different.

View solution

Describe the differences.

.....

.....

.....

.....

.....[2]

[Total: 4]

© UCLES 2017

10 A transformer is connected to a 240 V supply. It is used to provide the correct voltage for the motor in an electric drill. Fig. 10.1 shows the circuit.

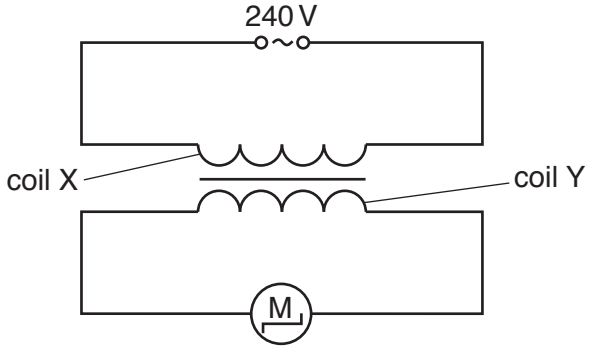

Fig. 10.1

(a) The transformer consists of two coils, labelled coil X and coil Y.

View solution

State the name of each coil.

X .....

Y .....[1]

(b) Coil X has 6400 turns and coil Y has 400 turns.

View solution

Calculate the voltage provided to the motor of the electric drill.

voltage = ... V [3]

[Total: 4]

11 Fig. 11.1 shows a coil connected in series with a d.c. supply.

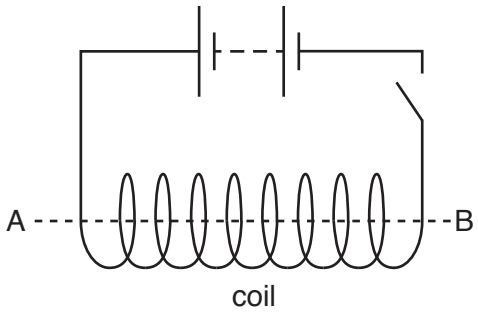

Fig. 11.1

(a) Fig. 11.2 shows a plan view of the coil. The arrows represent the current direction at the **top** of the coil.

View solution

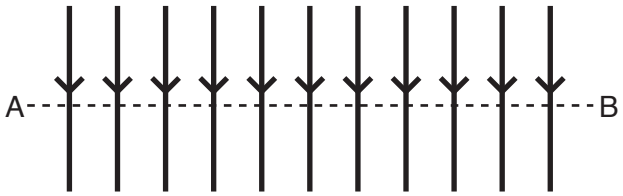

Fig. 11.2

On Fig. 11.2, draw lines to show the magnetic field due to the current in the coil.

- Draw **two** field lines above the line AB and **two** lines below it.
- Add arrows to show the direction of the magnetic field. [3]

(b) (i) An iron rod is placed inside the coil, as shown in Fig. 11.3.

View solution

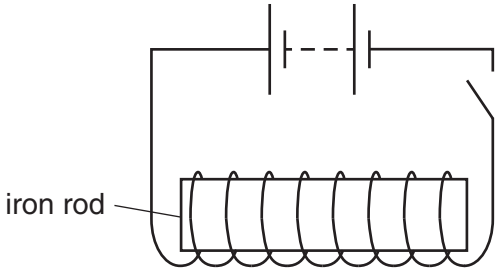

Fig. 11.3

State the name given to the combination of iron rod and coil when used in this way.

.....[1]

(ii) The arrangement shown in Fig. 11.3 is adapted to a number of commercial uses.

Suggest **one** of these uses.

View solution

.....[1]

[Total: 5]

12 (a) A scientist has a sample of a radioactive substance.

Suggest how he can determine whether the sample is emitting α-particles and whether it is emitting β-particles.

.....

.....

.....

.....

.....

.....

.....

.....

.....

.....[4]

(b) The table lists the charge and location of particles in an atom.

Complete the table by stating the charge and the location for each type of particle in an atom.

View solution

particle	charge	location
electron	negative	
neutron		
proton		in the nucleus

[3]

[Total: 7]

Permission to reproduce items where third-party owned material protected by copyright is included has been sought and cleared where possible. Every reasonable effort has been made by the publisher (UCLES) to trace copyright holders, but if any items requiring clearance have unwittingly been included, the publisher will be pleased to make amends at the earliest possible opportunity.

To avoid the issue of disclosure of answer-related information to candidates, all copyright acknowledgements are reproduced online in the Cambridge International Examinations Copyright Acknowledgements Booklet. This is produced for each series of examinations and is freely available to download at www.cie.org.uk after the live examination series.

Cambridge International Examinations is part of the Cambridge Assessment Group. Cambridge Assessment is the brand name of University of Cambridge Local Examinations Syndicate (UCLES), which is itself a department of the University of Cambridge.

© UCLES 2017