Cambridge IGCSE

Cambridge International Examinations
Cambridge International General Certificate of Secondary Education

CANDIDATE NAME									
CENTRE NUMBER						CANDIDATE NUMBER				

PHYSICS **0625/51**

Paper 5 Practical Test **May/June 2017**

1 hour 15 minutes

Candidates answer on the Question Paper.

Additional Materials: As listed in the Confidential Instructions

READ THESE INSTRUCTIONS FIRST

Write your Centre number, candidate number and name in the spaces at the top of the page.
Write in dark blue or black pen.
You may use an HB pencil for any diagrams or graphs.
Do not use staples, paper clips, glue or correction fluid.
DO **NOT** WRITE IN ANY BARCODES.

Answer **all** questions.
You are advised to spend about 20 minutes on each of questions 1 to 3, and 15 minutes on question 4.
Electronic calculators may be used.
You may lose marks if you do not show your working or if you do not use appropriate units.

At the end of the examination, fasten all your work securely together.
The number of marks is given in brackets [ ] at the end of each question or part question.

For Examiner's Use	
1	
2	
3	
4	
Total	

The syllabus is approved for use in England, Wales and Northern Ireland as a Cambridge International Level 1/Level 2 Certificate.

This document consists of **9** printed pages and **3** blank pages.

© UCLES 2017

1 In this experiment, you will investigate the stretching of a spring.

Carry out the following instructions, referring to Fig. 1.1.

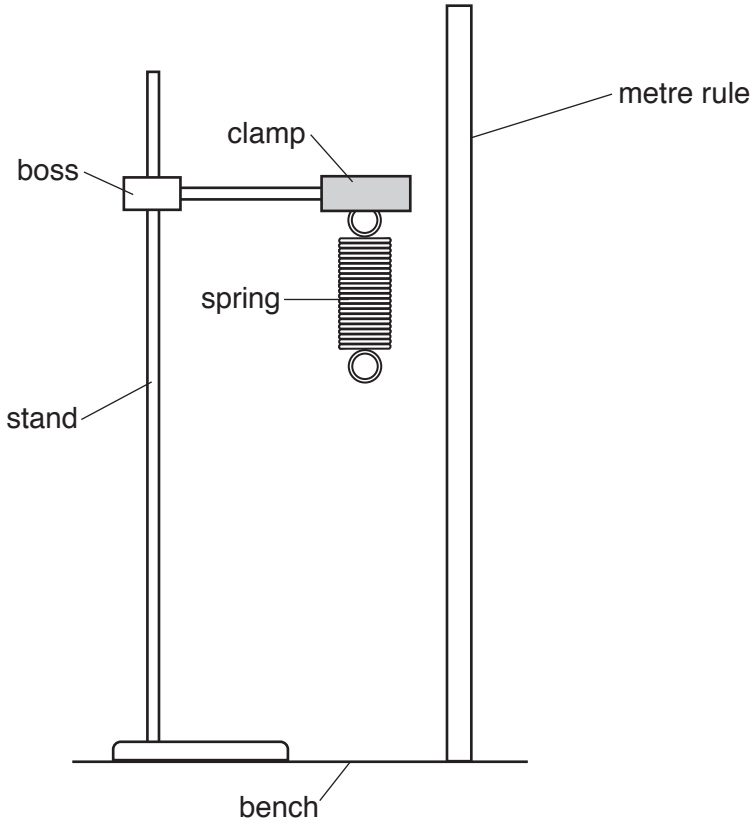

Fig. 1.1 (not to scale)

View solution

(a) • Do **not** remove the spring from the clamp. Use the metre rule to measure the length l_0 of the coiled part of the spring.
Record l_0, in Table 1.1 at load L = 0.0 N.

• On Fig. 1.1, show clearly the length l_0. [1]

(b) • Place a load L = 1.0 N on the spring. Record, in Table 1.1, the length l of the coiled part of the spring.

View solution

• Repeat this procedure using loads L = 2.0 N, 3.0 N, 4.0 N and 5.0 N.

Table 1.1

L/N	0.0	1.0	2.0	3.0	4.0	5.0
l/mm						

[2]

(c) Describe **one** precaution that you took in order to obtain reliable readings.

View solution

.....

.....

.....[1]

© UCLES 2017

(d) Plot a graph of l / mm (y-axis) against L / N (x-axis).

View solution

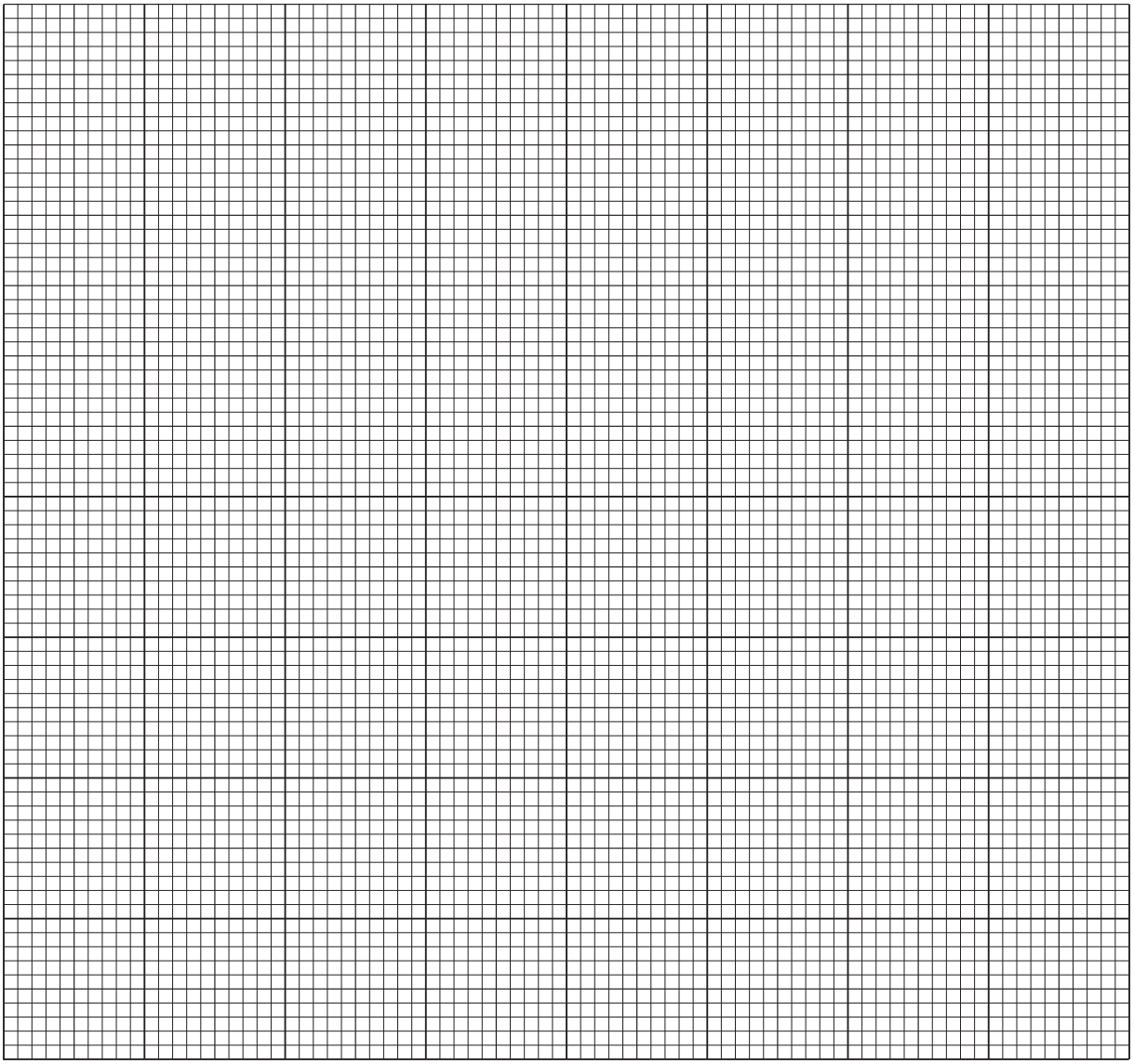

[4]

(e) A student suggests that the length l of the spring is directly proportional to the load L.

State whether your readings support this suggestion. Justify your answer by reference to the graph line.

.....

.....

.....[1]

(f) Use your results to predict the load L that would give a length l twice the value of l_0. Show clearly how you obtained your answer.

View solution

load L = ...[2]

[Total: 11]

2 In this experiment, you will investigate the cooling of water.

(a) Use the thermometer to measure room temperature θ_R.

View solution

θ_R = ...[1]

(b)
- Pour 200 cm^3 of hot water into the beaker. Place the thermometer in the beaker.
- Measure the temperature θ of the hot water in the beaker. Record this temperature in Table 2.1 at time t = 0 s.
- Immediately start the stopclock.

View solution

- After 180 s, measure the temperature θ shown on the thermometer. Record the time and temperature in the table.
- After a total of 360 s, measure the temperature θ shown on the thermometer. Record the time and temperature in the table.

Table 2.1

t/s	θ/°C
0	

[4]

(c) (i)
- Calculate the temperature fall $\Delta\theta_1$ during the first 180 s.

View solution

$\Delta\theta_1$ = ...

- Calculate the temperature fall $\Delta\theta_2$ during the next 180 s.

$\Delta\theta_2$ = ...

[1]

(ii) Suggest why $\Delta\theta_1$ is different from $\Delta\theta_2$.

.....

.....[1]

(d) Suggest **two** changes that you could make to the procedure to obtain a larger difference between the values of $\Delta\theta_1$ and $\Delta\theta_2$.

1. .....

2. .....

[2]

View solution

© UCLES 2017

(e) Fig. 2.1 shows a measuring cylinder. **A**, **B**, **C** and **D** are four possible lines of sight that could be used to read the volume of the water.

View solution

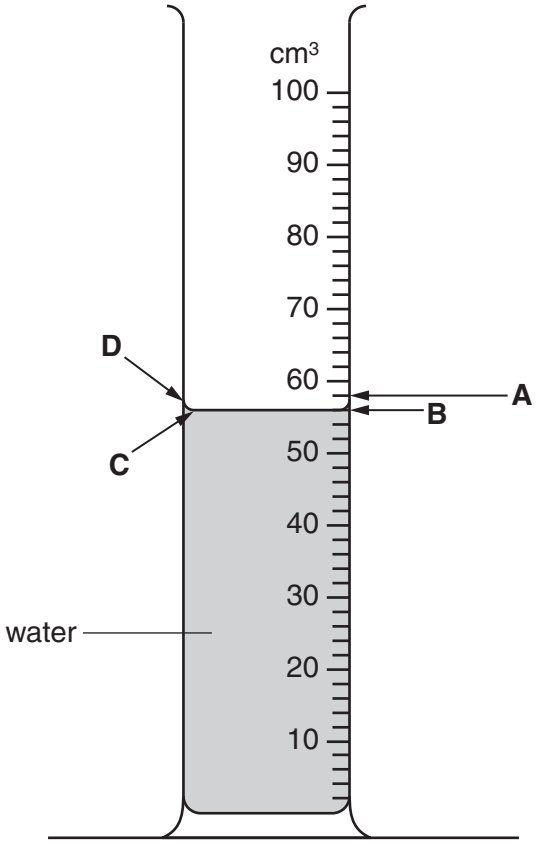

Fig. 2.1

Give **two** reasons why **B** should be used to obtain the most accurate reading.

1. .....

.....

2. .....

.....

[2]

[Total: 11]

3 In this experiment, you will investigate the refraction of light passing through a transparent block.

Carry out the following instructions, using the separate ray-trace sheet provided. You may refer to Fig. 3.1 for guidance.

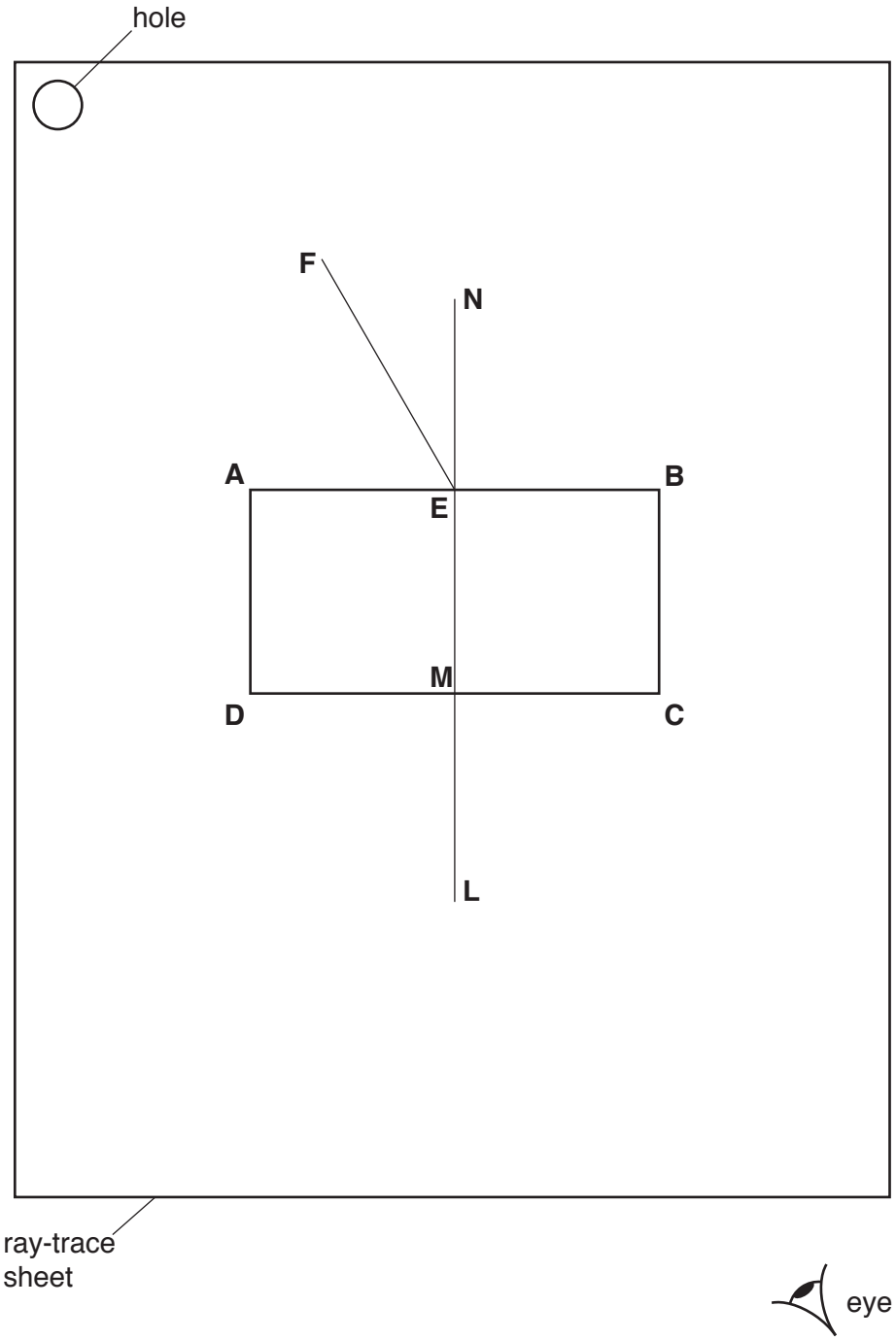

Fig. 3.1

(a) • Place the transparent block, largest face down, on the ray-trace sheet supplied. The block should be approximately in the middle of the paper. Draw the outline of the block **ABCD**.

• Remove the block and draw a normal **NL** at the centre of side **AB**. Label the point **E** where the normal crosses **AB**. Label the point **M** where the normal crosses **CD**.

View solution

© UCLES 2017

- Draw a line **FE**, to the left of the normal and at an angle of incidence $i = 30°$ to the normal, as shown in Fig. 3.1.

- Place two pins P_1 and P_2 on the line **FE** placing one pin close to point **E**. Label the positions of P_1 and P_2.

- Replace the block and observe the images of P_1 and P_2 through side **CD** of the block so that the images of P_1 and P_2 appear one behind the other. Place two pins P_3 and P_4 between your eye and the block so that P_3 and P_4, and the images of P_1 and P_2 seen through the block, appear one behind the other. Label the positions of P_3 and P_4.

- Remove the block.

- Draw a line joining the positions of P_3 and P_4. Continue the line until it meets the normal **NL** and label this point **K**. [4]

(b) • Measure and record the angle α between the line joining the positions of P_3 and P_4 and the line **KL**.

α = ...

- Measure and record the length *x* between points **M** and **K**.

View solution

x = ...

[2]

(c) Repeat steps **(a)** and **(b)** with the angle of incidence $i = 50°$.

View solution

α = ...

x = ...

[2]

(d) A student suggests that the angle α should always be equal to the angle of incidence *i*.

State whether your results support this suggestion. Justify your answer by reference to the readings.

statement .....

justification .....

.....

[2]

(e) Suggest **one** precaution that you should take with this experiment to obtain reliable results.

.....

.....

.....[1]

Tie your ray-trace sheet into this Question Paper between pages 6 and 7.

View solution

[Total: 11]

© UCLES 2017

4 A student is investigating whether the resistance of a wire depends on the material from which the wire is made.

View solution

Resistance R is given by the equation $R = \frac{V}{I}$.

The following apparatus is available to the student:

ammeter
voltmeter
power supply (0–3 V)
micrometer screw gauge
variable resistor
switch
connecting leads
wires made of different materials.

Plan an experiment to investigate whether the resistance of a wire depends on the material from which the wire is made. You are **not** required to carry out this investigation.

You should:

- draw a diagram of the circuit you would use to determine the resistance of each wire
- explain briefly how you would carry out the investigation, including the measurements you would take
- state the key variables that you would control
- draw a suitable table, with column headings, to show how you would display your readings (you are **not** required to enter any readings in the table).

.....

.....

© UCLES 2017

.....

.....

.....

.....

.....

.....

.....

.....

.....

.....

.....

.....

.....

.....

.....

.....[7]

[Total: 7]

BLANK PAGE

© UCLES 2017

BLANK PAGE

© UCLES 2017

BLANK PAGE

Permission to reproduce items where third-party owned material protected by copyright is included has been sought and cleared where possible. Every reasonable effort has been made by the publisher (UCLES) to trace copyright holders, but if any items requiring clearance have unwittingly been included, the publisher will be pleased to make amends at the earliest possible opportunity.

To avoid the issue of disclosure of answer-related information to candidates, all copyright acknowledgements are reproduced online in the Cambridge International Examinations Copyright Acknowledgements Booklet. This is produced for each series of examinations and is freely available to download at www.cie.org.uk after the live examination series.

Cambridge International Examinations is part of the Cambridge Assessment Group. Cambridge Assessment is the brand name of University of Cambridge Local Examinations Syndicate (UCLES), which is itself a department of the University of Cambridge.

© UCLES 2017