Cambridge IGCSE

Cambridge International Examinations
Cambridge International General Certificate of Secondary Education

CANDIDATE NAME									
CENTRE NUMBER						CANDIDATE NUMBER				

PHYSICS **0625/52**

Paper 5 Practical Test **May/June 2017**

1 hour 15 minutes

Candidates answer on the Question Paper.

Additional Materials: As listed in the Confidential Instructions.

READ THESE INSTRUCTIONS FIRST

Write your Centre number, candidate number and name in the spaces at the top of the page.
Write in dark blue or black pen.
You may use an HB pencil for any diagrams or graphs.
Do not use staples, paper clips, glue or correction fluid.
DO **NOT** WRITE IN ANY BARCODES.

Answer **all** questions.
You are advised to spend about 20 minutes on each of questions 1 to 3, and 15 minutes on question 4.
Electronic calculators may be used.
You may lose marks if you do not show your working or if you do not use appropriate units.

At the end of the examination, fasten all your work securely together.
The number of marks is given in brackets [ ] at the end of each question or part question.

For Examiner's Use	
1	
2	
3	
4	
Total	

The syllabus is approved for use in England, Wales and Northern Ireland as a Cambridge International Level 1/Level 2 Certificate.

This document consists of **12** printed pages.

© UCLES 2017

1 In this experiment, you will investigate the resistance of two resistance wires. The circuit has been set up for you.

Carry out the following instructions, referring to Fig. 1.1.

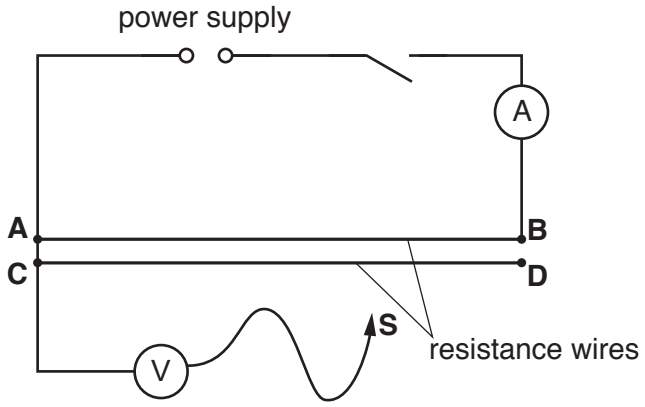

Fig. 1.1

(a) (i)

- Switch on. Place the sliding contact **S** on the resistance wire **AB** at a distance $l = 0.200\,\text{m}$ from point **A**.
- Measure and record in Table 1.1 the current I in the circuit and the potential difference (p.d.) V across the length $l = 0.200\,\text{m}$ of resistance wire **AB**.
- Calculate the resistance R of the length $l = 0.200\,\text{m}$ of resistance wire **AB**, using the equation $R = \frac{V}{I}$. Record R in the table.
- Repeat the procedure using the distance $l = 0.400\,\text{m}$. Switch off.
- Complete the column headings in the table.

View solution

Table 1.1

l/	V/	I/	R/
0.200			
0.400			

[4]

(ii) Calculate the difference between the two values for R.

difference = ... [1]

View solution

(b) (i) • Switch on. Place the sliding contact **S** on the resistance wire **AB** at a distance $l = 0.500\,\text{m}$ from point **A**.

View solution

• Measure and record the current I_1 in the circuit and the potential difference V_1.

I_1 = ...

V_1 = ...

• Calculate the resistance R_1 of the length $l = 0.500\,\text{m}$ of resistance wire **AB**, using the equation $R_1 = \frac{V_1}{I_1}$.

R_1 = ... [1]

(ii) Use the short connecting lead provided to connect points **B** and **D**.

• Switch on. Place the sliding contact **S** on the resistance wire **AB** at a distance $l = 0.500\,\text{m}$ from point **A**.

View solution

• Measure and record the current I_2 in the circuit and the potential difference V_2.

I_2 = ...

V_2 = ...

Calculate the combined resistance R_2 of resistance wires **AB** and **CD**, using the equation $R_2 = \frac{V_2}{I_2}$.

R_2 = ... [2]

(c) Use the results in **(b)(i)** and **(b)(ii)** to compare the resistance R_1 of wire **AB** with the resistance R_2 of wires **AB** and **CD** connected together.

View solution

Tick **one** box next to the description that most closely matches your results.

☐ $R_1 = R_2$

☐ $R_1 = 2R_2$

☐ $2R_1 = R_2$

☐ There is no simple relationship between R_1 and R_2.

[1]

(d) Suggest **two** reasons why different students all carrying out this experiment carefully, with the same apparatus, may not obtain identical results.

1. .....

.....

2. .....

.....

[2]

[Total: 11]

View solution

2 In this experiment, you will investigate the principle of moments.

Carry out the following instructions, referring to Fig. 2.1.

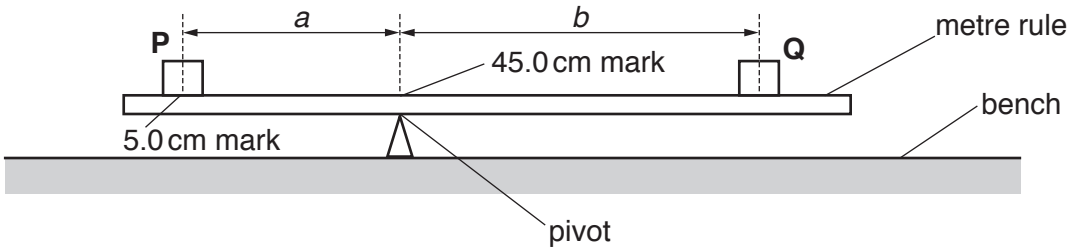

Fig. 2.1

(a) Place the load **P** on the metre rule at the 5.0 cm mark. Place the metre rule on the pivot at the 45.0 cm mark. Place load **Q** on the rule and adjust its position so that the metre rule is as near as possible to being balanced.

View solution

- Record, in Table 2.1, the distance *a* between the centre of load **P** and the pivot.
- Measure and record in the table the distance *b* from the centre of load **Q** to the pivot.
- Repeat the steps above, placing the load **P** at the 10.0 cm mark, 15.0 cm mark, 20.0 cm mark and 25.0 cm mark. Keep the pivot at the 45.0 cm mark each time. Record all the readings in the table.

Table 2.1

a/cm	*b*/cm

[2]

(b) Plot a graph of b/cm (y-axis) against a/cm (x-axis). Start both axes at the origin (0,0).

View solution

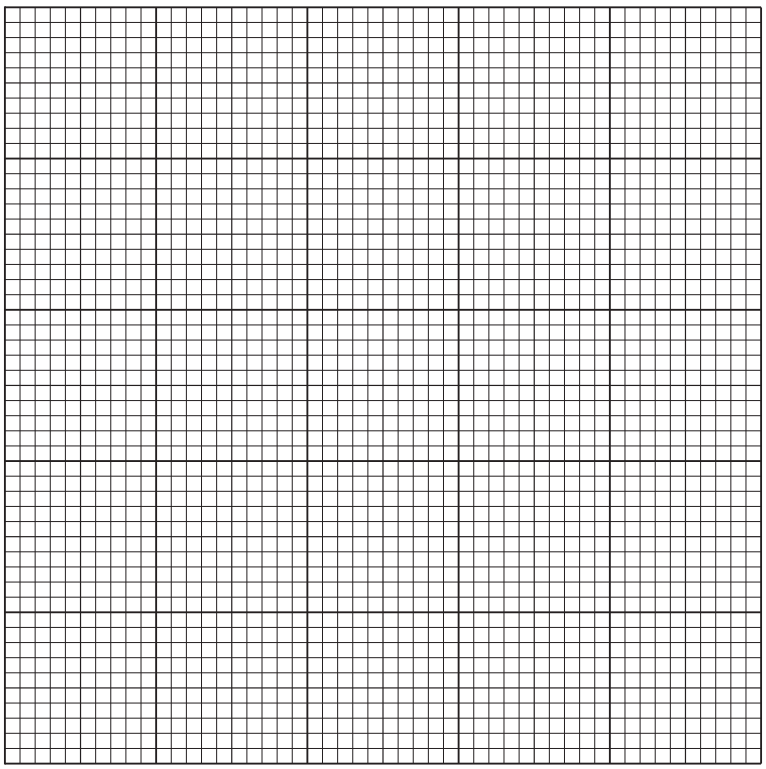

[4]

(c) A student suggests that a is directly proportional to b.

View solution

State whether your readings support this suggestion. Justify your answer by reference to the graph line.

.....

.....

.....[1]

(d) **(i)** • Use the balance provided to measure the mass m, in grams, of the metre rule.

m = ... g

• Calculate the value of mX, where $X = 0.05\,\text{N cm/g}$.

View solution

mX = ... N cm [1]

(ii) • Use the value of *a* in the first row of Table 2.1 to calculate *Pa*, where *P* = 1.00 N. *P* is the weight of load **P**. Include the unit.

View solution

Pa = ...

• Use the value of *b* in the first row of Table 2.1 to calculate *Qb*, where *Q* = 0.80 N. *Q* is the weight of load **Q**. Include the unit.

Qb = ...

[2]

(e) A student states that *Pa* should be equal to *Qb*.

Look carefully at Fig. 2.1 and your answers to **(d)** and suggest what the student has not realised.

.....

.....[1]

[Total: 11]

View solution

3 In this experiment, you will investigate the refraction of light passing through a transparent block.

Carry out the following instructions, using the separate ray-trace sheet provided. You may refer to Fig. 3.1 for guidance.

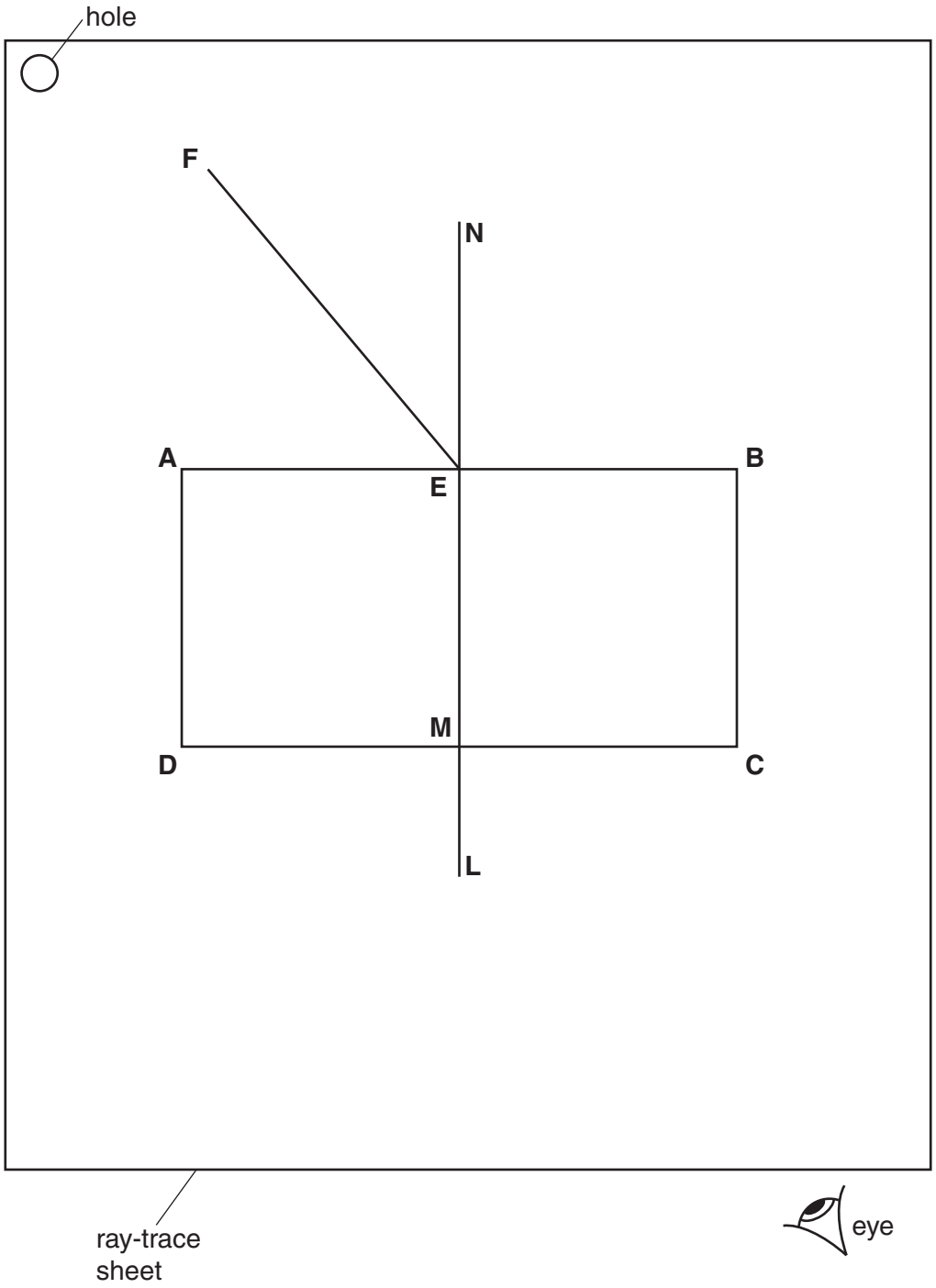

Fig. 3.1

- Place the transparent block, largest face down, on the ray-trace sheet supplied. The block should be approximately in the middle of the paper. Draw the outline of the block **ABCD**.

- Remove the block and draw a normal **NL** at the centre of side **AB**. Label the point **E** where the normal crosses **AB**. Label the point **M** where the normal crosses **CD**.

© UCLES 2017

(a) • Draw a line **FE** to the left of the normal, and at an angle of incidence $i = 40°$ to the normal, as shown in Fig. 3.1.

• Place two pins P_1 and P_2 on the line **FE**, placing one pin close to **E**. Label the positions of P_1 and P_2.

• Replace the block and observe the images of P_1 and P_2 through side **CD** of the block so that the images of P_1 and P_2 appear one behind the other. Place two pins P_3 and P_4 between your eye and the block so that P_3 and P_4, and the images of P_1 and P_2 seen through the block, appear one behind the other. Label the positions of P_3 and P_4. Remove the block.

View solution [2]

(b) • Draw a line joining the positions of P_3 and P_4. Continue the line until it meets the normal **NL**. Label the point **K** where this line crosses **CD**.

• Measure and record the angle α between the line joining the positions of P_3 and P_4 and the normal **NL**.

α = ...

• Measure and record the length x between points **M** and **K**.

View solution

x = ...

[3]

(c) • Repeat the steps in **(a)** but with the line **FE** to the right of the normal.

• Draw a line joining the new positions of P_3 and P_4. Continue the line until it meets the normal **NL**. Label the point **Q** where this line crosses **CD**.

• Measure and record the angle β between the line joining the new positions of P_3 and P_4 and the normal **NL**.

β = ...

• Measure and record the length y between points **M** and **Q**.

View solution

y = ...

[3]

(d) A student suggests that the results for α and x should be the same as the results for β and y. State whether your results support this suggestion. Justify your answer by reference to the results.

statement .....

justification .....

.....

[2]

View solution

(e) Suggest **one** precaution that you should take with this experiment to obtain reliable results.

.....

.....

.....[1]

Tie your ray-trace sheet into this Question Paper between pages 8 and 9.

[Total: 11]

View solution

4 A student is investigating the effect of draughts (moving air) on the rate of cooling of hot water.

View solution

The following apparatus is available:

electric fan with four speed settings
supply of hot water
thermometer
250 cm^3 beaker
250 cm^3 measuring cylinder
stopwatch
clamp, boss and stand.

Plan an experiment to investigate the effect of draughts on the rate of cooling of hot water.
You are **not** required to carry out this investigation.

You should:

- explain briefly how you would carry out the investigation
- state the key variables that you would control
- draw a table, or tables, with column headings, to show how you would display your readings (you are **not** required to enter any readings in the table)
- explain how you would use your readings to reach a conclusion.

You may draw a diagram if it helps your explanation.

.....

.....

© UCLES 2017

.....

.....

.....

.....

.....

.....

.....

.....

.....

.....

.....

.....[7]

[Total: 7]

Permission to reproduce items where third-party owned material protected by copyright is included has been sought and cleared where possible. Every reasonable effort has been made by the publisher (UCLES) to trace copyright holders, but if any items requiring clearance have unwittingly been included, the publisher will be pleased to make amends at the earliest possible opportunity.

To avoid the issue of disclosure of answer-related information to candidates, all copyright acknowledgements are reproduced online in the Cambridge International Examinations Copyright Acknowledgements Booklet. This is produced for each series of examinations and is freely available to download at www.cie.org.uk after the live examination series.

Cambridge International Examinations is part of the Cambridge Assessment Group. Cambridge Assessment is the brand name of University of Cambridge Local Examinations Syndicate (UCLES), which is itself a department of the University of Cambridge.