Cambridge IGCSE

**Cambridge International Examinations**
Cambridge International General Certificate of Secondary Education

| | | | | | | | | | |
|---|---|---|---|---|---|---|---|---|---|
| CANDIDATE NAME | | | | | | | | | |
| CENTRE NUMBER | | | | | | CANDIDATE NUMBER | | | |

**PHYSICS** **0625/61**

Paper 6 Alternative to Practical **May/June 2017**

**1 hour**

Candidates answer on the Question Paper.

No Additional Materials are required.

**READ THESE INSTRUCTIONS FIRST**

Write your Centre number, candidate number and name on all the work you hand in.
Write in dark blue or black pen.
You may use an HB pencil for any diagrams or graphs.
Do not use staples, paper clips, glue or correction fluid.
DO **NOT** WRITE IN ANY BARCODES.

Answer **all** questions.
Electronic calculators may be used.
You may lose marks if you do not show your working or if you do not use appropriate units.

At the end of the examination, fasten all your work securely together.
The number of marks is given in brackets [ ] at the end of each question or part question.

The syllabus is approved for use in England, Wales and Northern Ireland as a Cambridge International Level 1/Level 2 Certificate.

This document consists of **12** printed pages.

© UCLES 2017

**1** The class is investigating the stretching of a spring.

Fig. 1.1 shows the apparatus.

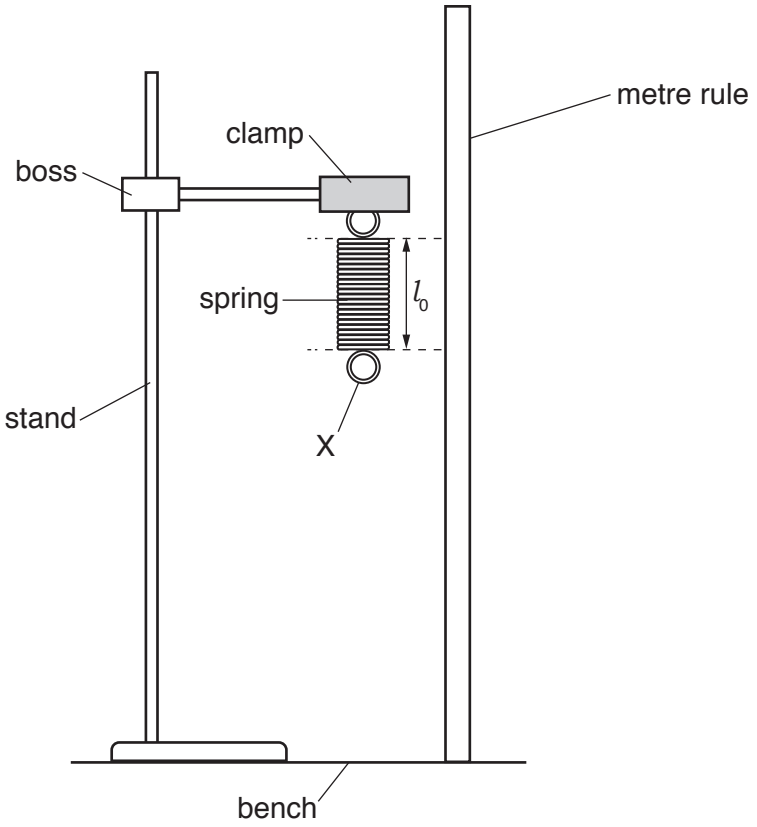


**Fig. 1.1**

View solution

**(a) (i)** On Fig. 1.1, measure the length $l_0$.
Record $l_0$ in Table 1.1 at load $L = 0.0$ N. [1]

View solution

**(ii)** Explain why $l_0$ is **not** measured to point X on the spring.

.....

.....[1]

**(b)** A student hangs a 1.0 N load on the spring. He records the new length $l$ of the spring.

He repeats the procedure using loads of 2.0 N, 3.0 N, 4.0 N and 5.0 N. The readings are shown in Table 1.1.

View solution

**Table 1.1**

| $L$/N | 0.0 | 1.0 | 2.0 | 3.0 | 4.0 | 5.0 |
|---|---|---|---|---|---|---|
| $l$/mm | | 17 | 20 | 21 | 23 | 25 |

Describe **one** precaution that you would take in order to obtain reliable readings.

.....

.....[1]

© UCLES 2017

**(c)** Plot a graph of $l$/mm ($y$-axis) against $L$/N ($x$-axis).

View solution

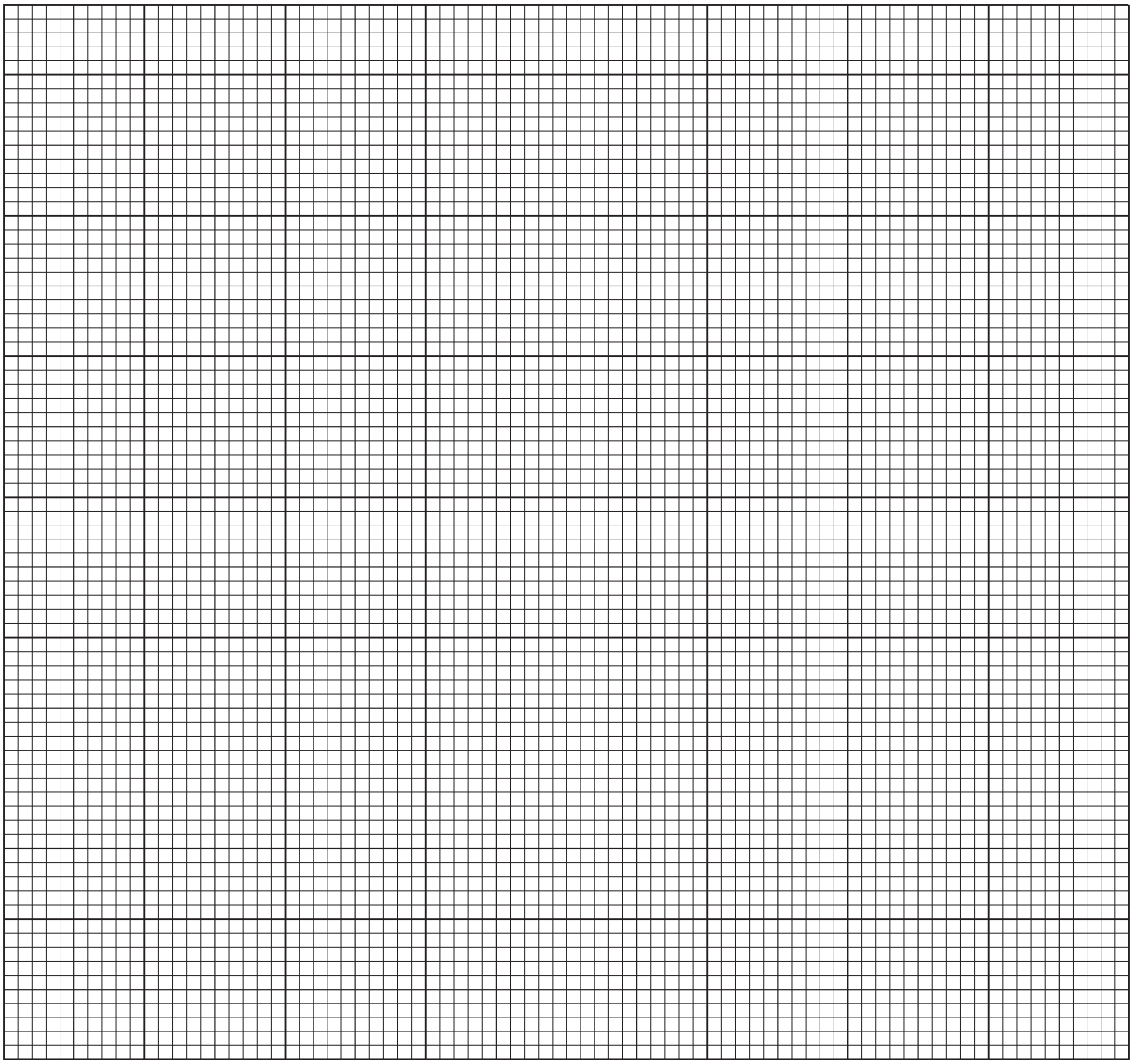

[4]

**(d)** A student suggests that the length $l$ of the spring is directly proportional to the load $L$.

State whether your readings support this suggestion. Justify your answer by reference to the graph line.

.....

.....[1]

**(e)** Use the results to predict the load $L$ that would give a length $l$ twice the value of $l_0$. Show clearly how you obtained your answer.

View solution

load $L$ = .....[2]

[Total: 10]

**2** The class is investigating the refraction of light passing through a transparent block. A student is using optics pins to trace the paths of rays of light.

Fig. 2.1 shows the student's ray-trace sheet.

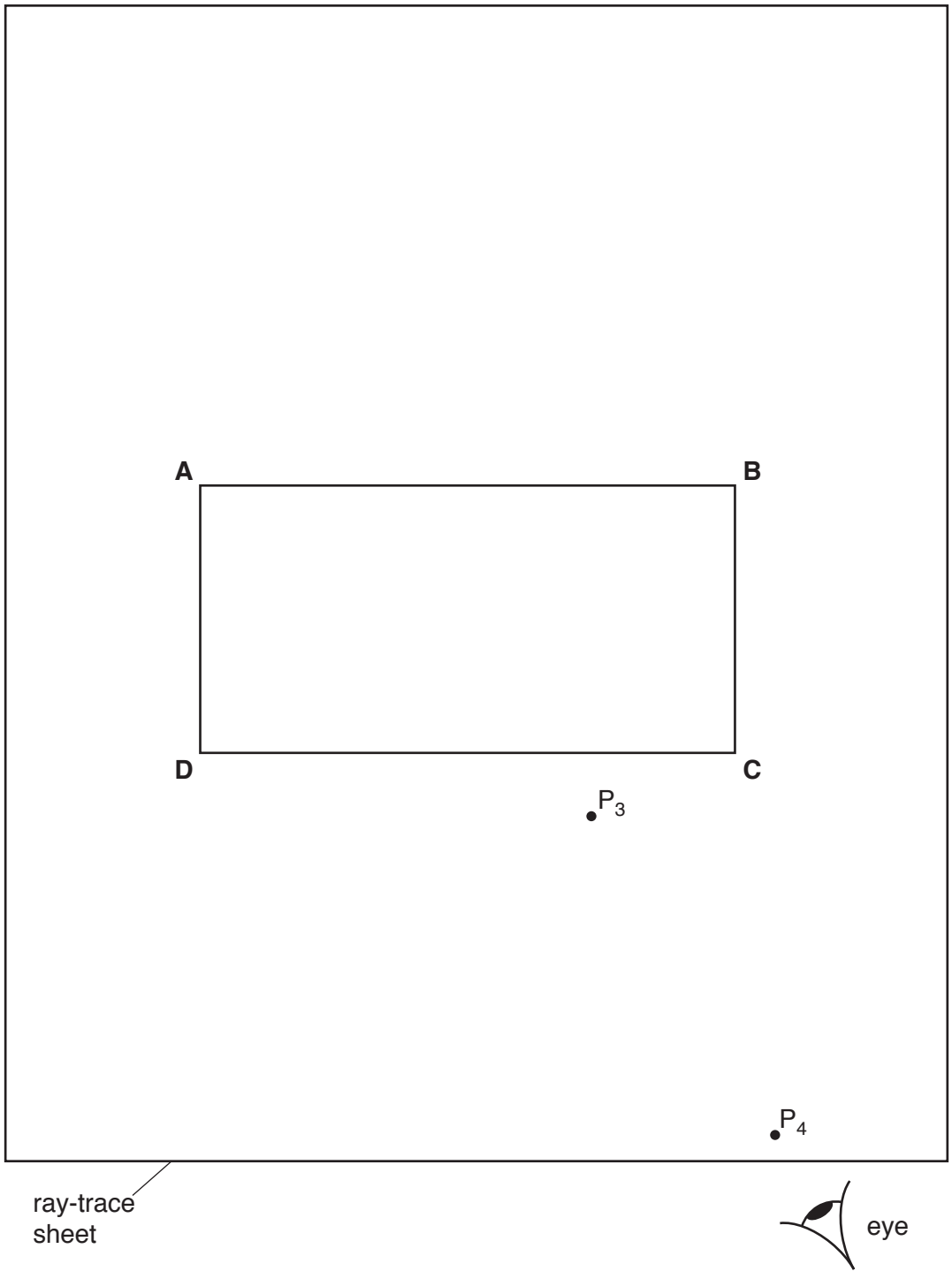


**Fig. 2.1**

© UCLES 2017

**(a)** • On Fig. 2.1, draw a normal at the centre of side **AB**. Label this line **NL**. Label the point **E** where the normal crosses **AB**. Label the point **M** where the normal crosses **CD**.

• Draw a line above **AB** to the left of the normal and at an angle of incidence $i = 30°$ to the normal. Label this line **FE**.

• Label the positions of two pins $P_1$ and $P_2$ placed a suitable distance apart on **FE** for accurate ray tracing. [2]

**(b)** The student observes the images of $P_1$ and $P_2$ through side **CD** of the block so that the images of $P_1$ and $P_2$ appear one behind the other. He places two pins $P_3$ and $P_4$ between his eye and the block so that $P_3$ and $P_4$, and the images of $P_1$ and $P_2$ seen through the block, appear one behind the other. The positions of $P_3$ and $P_4$ are marked on Fig. 2.1.

Draw a line joining the positions of $P_3$ and $P_4$. Continue the line until it meets the normal. Label this point **K**. [1]

**(c)** • Measure and record the angle $\alpha$ between the line joining the positions of $P_3$ and $P_4$ and the line **KM**.

$\alpha =$ .....

• Measure and record the length $x$ between points **M** and **K**.

View solution

$x =$ .....

[2]

**(d)** The student repeats the procedure with the angle of incidence $i = 50°$.
His readings for $\alpha$ and $x$ are shown.

View solution

$\alpha =$ 52° .....

$x =$ 19 mm .....

A student suggests that the angle $\alpha$ should always be equal to the angle of incidence $i$.

State whether the results support this suggestion. Justify your answer by reference to the values of $\alpha$ for $i = 30°$ and $i = 50°$.

statement .....

justification .....

[2]

**(e)** Suggest **one** precaution that you would take with this experiment to obtain reliable results.

View solution

.....

.....

.....[1]

[Total: 8]

© UCLES 2017

**3** The class is investigating the cooling of water.

Fig. 3.1 shows the apparatus.

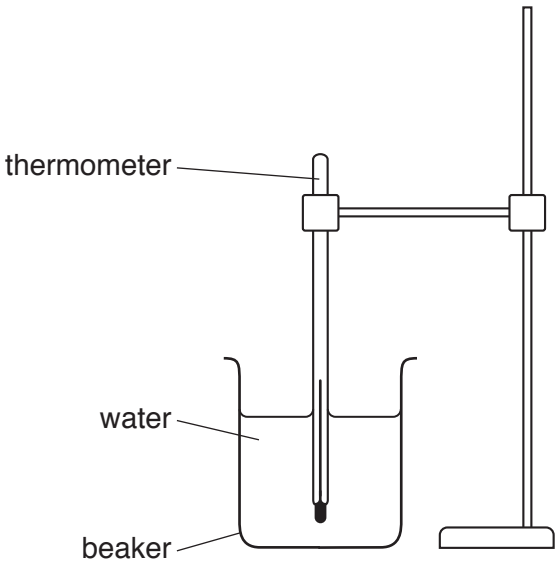


**Fig. 3.1**

**(a)** The thermometer in Fig. 3.2 shows the room temperature $\theta_R$ at the beginning of the experiment.

Record $\theta_R$.

View solution

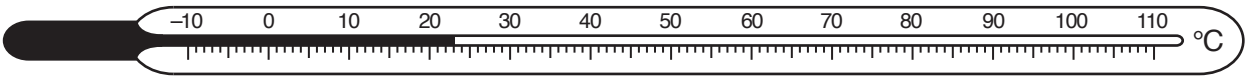


**Fig. 3.2**

$\theta_R$ = .....[1]

© UCLES 2017

**(b)**
- A student pours 200 $cm^3$ of hot water into the beaker.
- She measures the temperature $\theta$ of the hot water in the beaker.
- She immediately starts a stopclock.
- After 180 s, she measures the temperature $\theta$ of the hot water.
- After 360 s, she measures the temperature $\theta$ of the hot water again.

View solution

The readings are shown in Table 3.1.

**Table 3.1**

| $t$/s | $\theta$/°C |
|---|---|
| 0 | 85 |
| 180 | 74 |
| 360 | 66 |

**(i)**
- Calculate the temperature fall $\Delta\theta_1$ during the first 180 s.

$\Delta\theta_1$ = .....

- Calculate the temperature fall $\Delta\theta_2$ during the next 180 s.

$\Delta\theta_2$ = .....[1]

**(ii)** Suggest why $\Delta\theta_1$ is different from $\Delta\theta_2$.

View solution

.....

.....[1]

**(c)** Another student plans to investigate the factors affecting the difference between the values of $\Delta\theta_1$ and $\Delta\theta_2$.

Suggest **two** changes that he could make to the procedure to obtain a larger value of this difference.

1. .....

2. .....

[2]

View solution

**(d)** The volume of water used in this experiment is measured using a measuring cylinder. Fig. 3.3 shows a measuring cylinder.

**A**, **B**, **C** and **D** are four possible lines of sight that could be used to read the volume of the water.

View solution

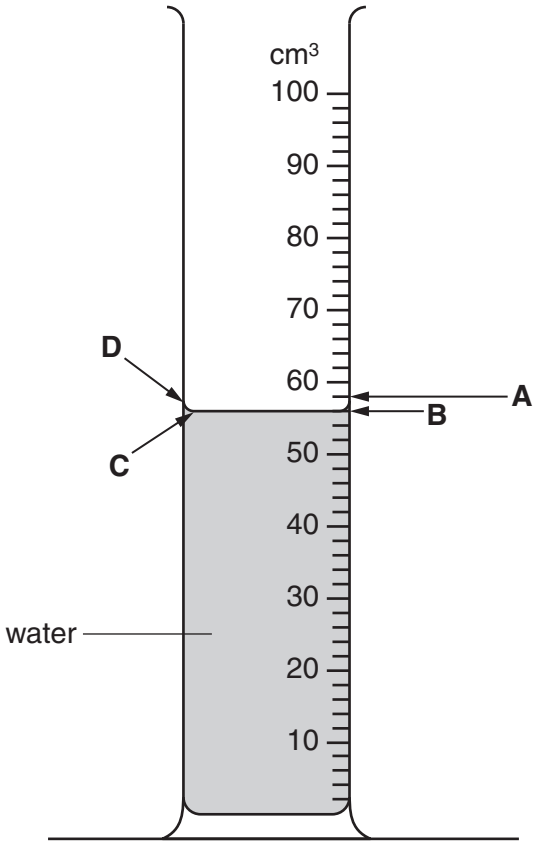


**Fig. 3.3**

Give **two** reasons why **B** should be used to obtain the most accurate reading.

1. .....

.....

2. .....

.....

[2]

[Total: 7]

**4** The class is investigating the motion of a pendulum.

Fig. 4.1 shows the apparatus.

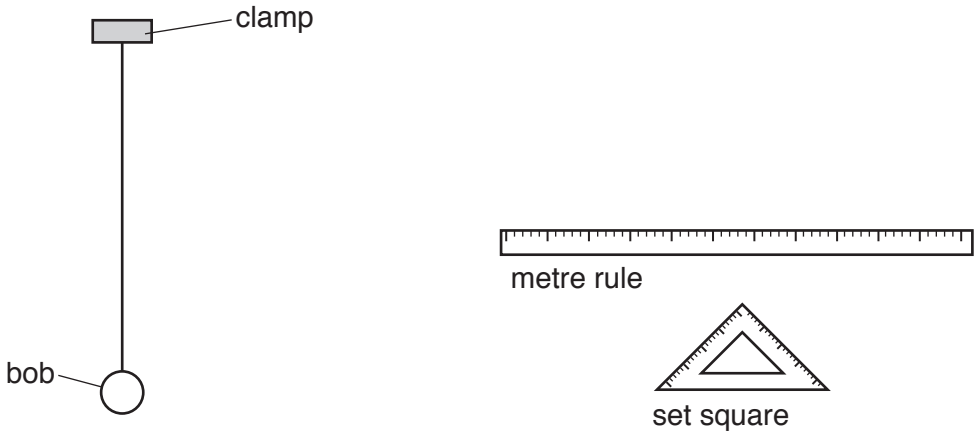


**Fig. 4.1**

View solution

**(a) (i)** On Fig. 4.1, show clearly the length $l$ of the pendulum. [1]

**(ii)** Use Fig. 4.2 to explain how you would measure the length $l$ accurately. You may draw on the diagram.

View solution

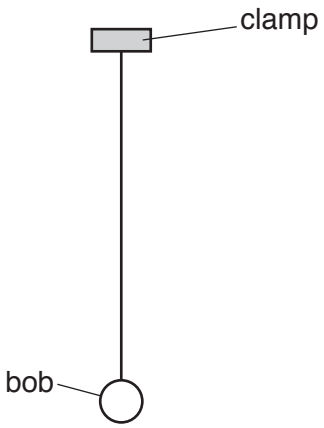


**Fig. 4.2**

.....

.....

.....

.....

.....[2]

**(b)** A student determines the period $T$ of the pendulum. The period is the time taken for one complete oscillation. The student measures the time $t$ for 20 oscillations.

View solution

Fig. 4.3 shows the time $t$.




**Fig. 4.3**

**(i)** Calculate the period $T$ of the pendulum.

$T$ = .....[1]

**(ii)** Explain how measuring the time for 20 oscillations rather than one oscillation helps the student to obtain a more reliable value for the period.

.....

.....

.....[2]

**(c)** The student wants to determine a value for the acceleration of free fall from his results. He needs the value of $T^2$ to do this.

View solution

Calculate $T^2$.

Give your answer to a suitable number of significant figures and include the unit.

$T^2$ = ..... [2]

[Total: 8]

© UCLES 2017

**5** A student is investigating whether the resistance of a wire depends on the material from which the wire is made.

View solution

Resistance $R$ is given by the equation $R = \frac{V}{I}$.

The following apparatus is available to the student:

ammeter
voltmeter
micrometer screw gauge
power supply (0–3 V)
variable resistor
switch
connecting leads
wires of different materials.

Plan an experiment to investigate whether the resistance of a wire depends on the material from which it is made.

You should:

- draw a diagram of the circuit you would use to determine the resistance of each wire
- explain briefly how you would carry out the investigation, including the measurements you would take
- state the key variables that you would control
- draw a suitable table, with column headings, to show how you would display your readings (you are **not** required to enter any readings in the table).

.....

.....

© UCLES 2017

.....

.....

.....

.....

.....

.....

.....

.....

.....

.....

.....

.....

.....

.....

.....

.....[7]

[Total: 7]

Permission to reproduce items where third-party owned material protected by copyright is included has been sought and cleared where possible. Every reasonable effort has been made by the publisher (UCLES) to trace copyright holders, but if any items requiring clearance have unwittingly been included, the publisher will be pleased to make amends at the earliest possible opportunity.

To avoid the issue of disclosure of answer-related information to candidates, all copyright acknowledgements are reproduced online in the Cambridge International Examinations Copyright Acknowledgements Booklet. This is produced for each series of examinations and is freely available to download at www.cie.org.uk after the live examination series.

Cambridge International Examinations is part of the Cambridge Assessment Group. Cambridge Assessment is the brand name of University of Cambridge Local Examinations Syndicate (UCLES), which is itself a department of the University of Cambridge.