Cambridge IGCSE

Cambridge International Examinations
Cambridge International General Certificate of Secondary Education

CANDIDATE NAME									
CENTRE NUMBER						CANDIDATE NUMBER			

PHYSICS **0625/62**

Paper 6 Alternative to Practical **May/June 2017**

1 hour

Candidates answer on the Question Paper.

No Additional Materials are required.

READ THESE INSTRUCTIONS FIRST

Write your Centre number, candidate number and name on all the work you hand in.
Write in dark blue or black pen.
You may use an HB pencil for any diagrams or graphs.
Do not use staples, paper clips, glue or correction fluid.
DO **NOT** WRITE IN ANY BARCODES.

Answer **all** questions.
Electronic calculators may be used.
You may lose marks if you do not show your working or if you do not use appropriate units.

At the end of the examination, fasten all your work securely together.
The number of marks is given in brackets [ ] at the end of each question or part question.

The syllabus is approved for use in England, Wales and Northern Ireland as a Cambridge International Level 1/Level 2 Certificate.

This document consists of **12** printed pages.

© UCLES 2017

1 The class is investigating the resistances of two resistance wires.

The circuit used is shown in Fig. 1.1.

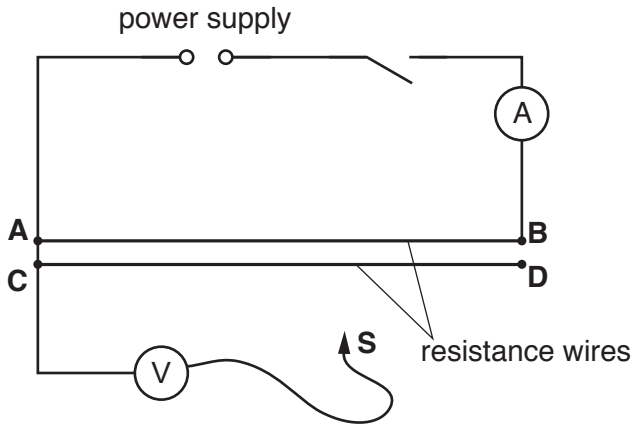

Fig. 1.1

(a) A student places a sliding contact **S** on the resistance wire **AB** at a distance $l = 0.200\,\text{m}$ from point **A**. She measures the current I in the circuit and the potential difference V across the length $l = 0.200\,\text{m}$ of resistance wire.

View solution

Figs. 1.2 and 1.3 show the voltmeter and ammeter readings.

(i) Write down the readings shown on the meters in Figs. 1.2 and 1.3.

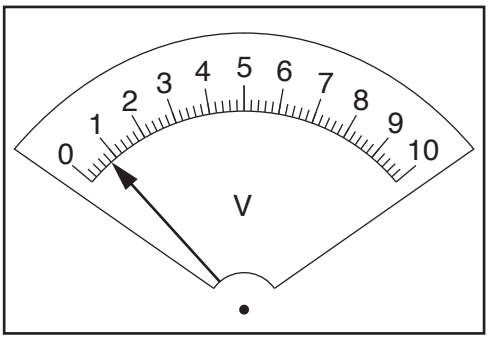

Fig. 1.2

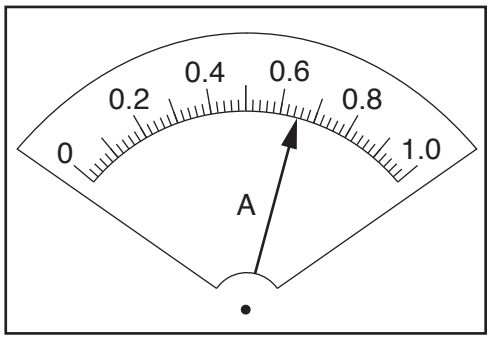

Fig. 1.3

V = ... I = ...

[2]

(ii) Calculate the resistance R of the length $l = 0.200\,\text{m}$ of resistance wire, using the equation $R = \frac{V}{I}$.

View solution

R = ...[1]

(b) The student repeats the procedure using the distance $l = 0.400\,\text{m}$. Her result is shown.

$R =$ 2.54 Ω

(i) Calculate the difference between the two values for R.

View solution

difference = ...[1]

(ii) Suggest a relationship between the length l and the resistance R of the wire that matches the results, within the limits of experimental accuracy.

.....

.....[1]

(c) Using the same method as in **(a)**, the student determines the resistance R_1 of the resistance wire **AB** of total length $l = 0.500\,\text{m}$.

$R_1 =$ 3.08 Ω

She then uses a short lead to connect points **B** and **D**. She uses the same method again to determine the combined resistance R_2 of the resistance wires **AB** and **CD** connected together.

$R_2 =$ 1.50 Ω

Use the student's results to compare the resistance R_1 of wire **AB** with the resistance R_2 of wires **AB** and **CD** connected together.

View solution

Tick the box next to the description that most closely matches the results.

- ☐ $R_1 = R_2$
- ☐ $R_1 = 2R_2$
- ☐ $2R_1 = R_2$
- ☐ There is no simple relationship between R_1 and R_2.

[1]

(d) Suggest **two** reasons why different students, all carrying out this experiment carefully, with the same apparatus, may **not** obtain identical results.

1. .....

.....

2. .....

.....

View solution

[2]

[Total: 8]

© UCLES 2017

2 The class is investigating the refraction of light passing through a transparent block. A student is using optics pins to trace the paths of rays of light.

Fig. 2.1 shows the student's ray-trace sheet.

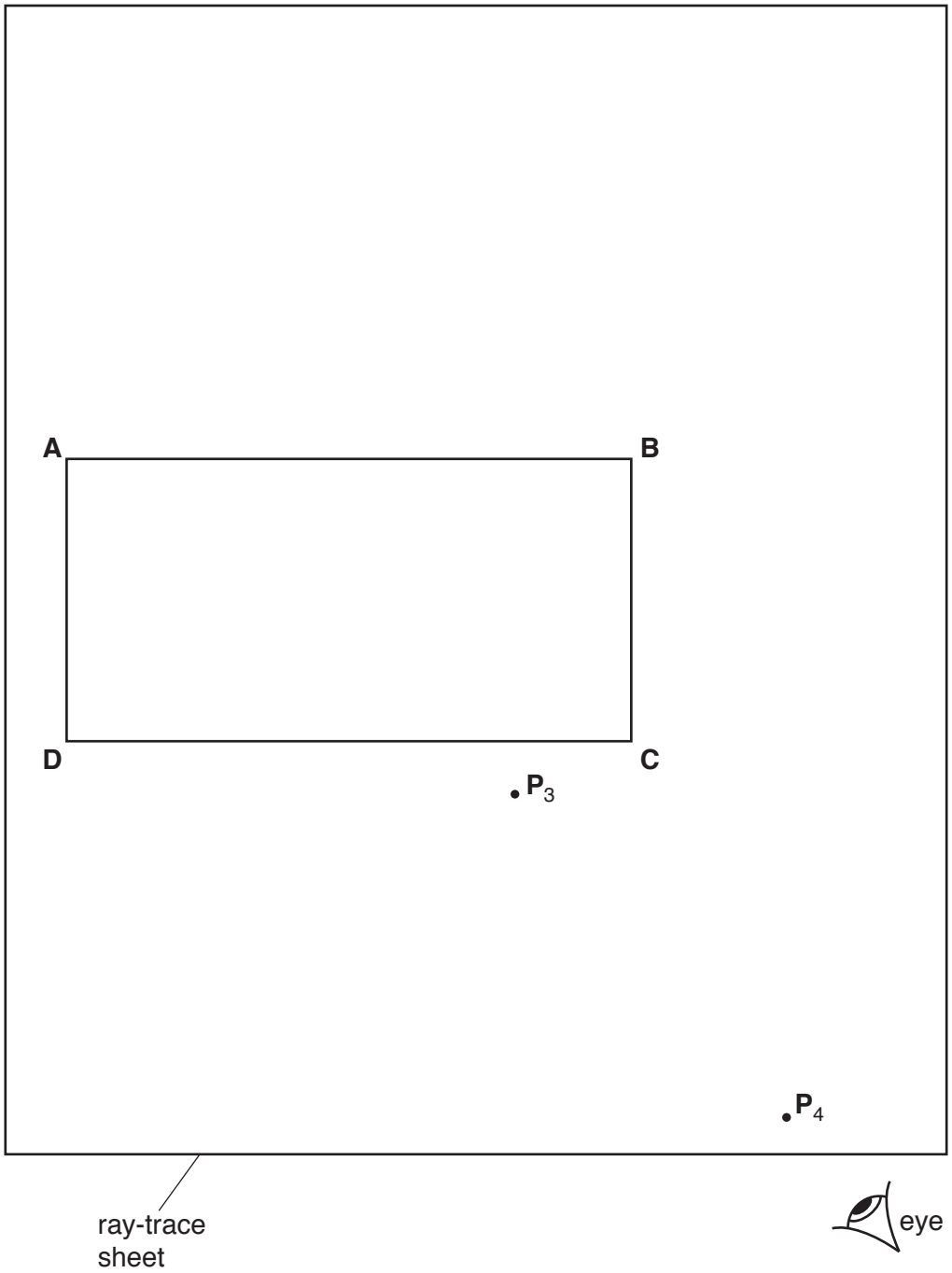

Fig. 2.1

View solution

(a) • On Fig. 2.1, draw and label a normal **NL** at the centre of side **AB**. Label the point **E** where the normal crosses **AB**. Label the point **M** where the normal crosses **CD**. [1]

• Draw a line **FE**, to the left of the normal and at an angle of incidence $i = 40°$ to the normal.

• Label the positions of two pins P_1 and P_2 on **FE** placed a suitable distance apart for accurate ray tracing. [2]

© UCLES 2017

(b) The student observes the images of P_1 and P_2 through side **CD** of the block so that the images of P_1 and P_2 appear one behind the other.

He places two pins P_3 and P_4 between his eye and the block so that P_3 and P_4, and the images of P_1 and P_2 seen through the block, appear one behind the other.

The positions of P_3 and P_4 are marked on Fig. 2.1.

Draw a line joining the positions of P_3 and P_4. Continue the line until it meets the normal **NL**. Label the point **K** where this line crosses **CD**. [1]

(c) • Measure and record the angle α between the line joining the positions of P_3 and P_4 and the normal line.

α = ...

• Measure and record the length x between points **M** and **K**.

x = ...

[2]

(d) The student repeats the procedure but with the line **FE** to the right of the normal.

He measures the angle β between the line joining the new positions of P_3 and P_4 and the normal.

β = 41° .....

He measures the length y between **M** and the new position of **K**.

y = 21 mm .....

A student suggests that the results for α and x should be the same as the results for β and y.

State whether the results support this suggestion. Justify your answer by reference to the results.

statement .....

justification .....

.....

[2]

(e) Suggest **one** precaution that you would take with this experiment to obtain reliable results.

.....

.....

.....[1]

[Total: 9]

© UCLES 2017

3 The class is investigating images formed on a screen using a lens.

Fig. 3.1 shows the apparatus.



Fig. 3.1

(a) The lens has a focal length of 15.0 cm.

Suggest a suitable distance *D* between the illuminated object and the screen in order to form a clearly focused image on the screen.

D = ...[1]

(b) The student places the lens as shown in the diagram a distance *u* from the object. She then moves the screen until she obtains a clearly focused image on the screen.

It is difficult to decide on the exact position of the screen that gives the best image.

Explain how you would find the best position for the screen as reliably as possible.

.....

.....[1]

(c) Another student uses a different lens and obtains these readings:

u = 15.0 cm

v = 29.7 cm

Calculate the focal length *f* of the lens using the equation $f = \frac{uv}{(u + v)}$.

Include the unit and give your answer to a suitable number of significant figures.

f = ...[2]

(d) Suggest **one** difference that you would expect to see in this experiment between the appearance of the object and the image.

.....[1]

(e) Which of the following procedures, **A**–**F**, are sensible for this experiment?
Circle one or more of the letters.

View solution

A Carry out the experiment in a darkened room.

B Close one eye when taking readings.

C Draw thin lines.

D Fix the rule in position on the bench.

E Make sure the pins are at least 5 cm apart.

F Repeat the experiment using different values of u and determine an average value for f.
[3]

[Total: 8]

© UCLES 2017

4 The class is investigating the principle of moments.

Fig. 4.1 shows the apparatus used.

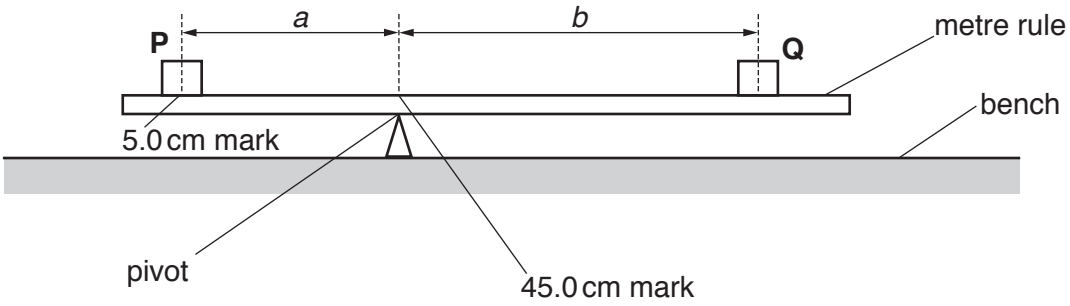

Fig. 4.1

(a) A student places a load **P** on the metre rule at the 5.0 cm mark. He places the metre rule on the pivot at the 45.0 cm mark. He places a load **Q** on the rule and adjusts its position so that the metre rule is as near as possible to being balanced.

- He measures the distance *a* between the centre of load **P** and the pivot.
- He measures the distance *b* from the centre of load **Q** to the pivot.
- He repeats the procedure placing the load **P** at the 10.0 cm mark, the 15.0 cm mark, the 20.0 cm mark and at the 25.0 cm mark. He keeps the pivot at the 45.0 cm mark each time. The readings are recorded in Table 4.1.

Table 4.1

a / cm	*b* / cm
40.0	42.5
35.0	36.4
30.0	30.1
25.0	23.9
20.0	17.5

© UCLES 2017

(i) Plot a graph of b/cm (y-axis) against a/cm (x-axis). Start both axes at the origin (0,0).

View solution

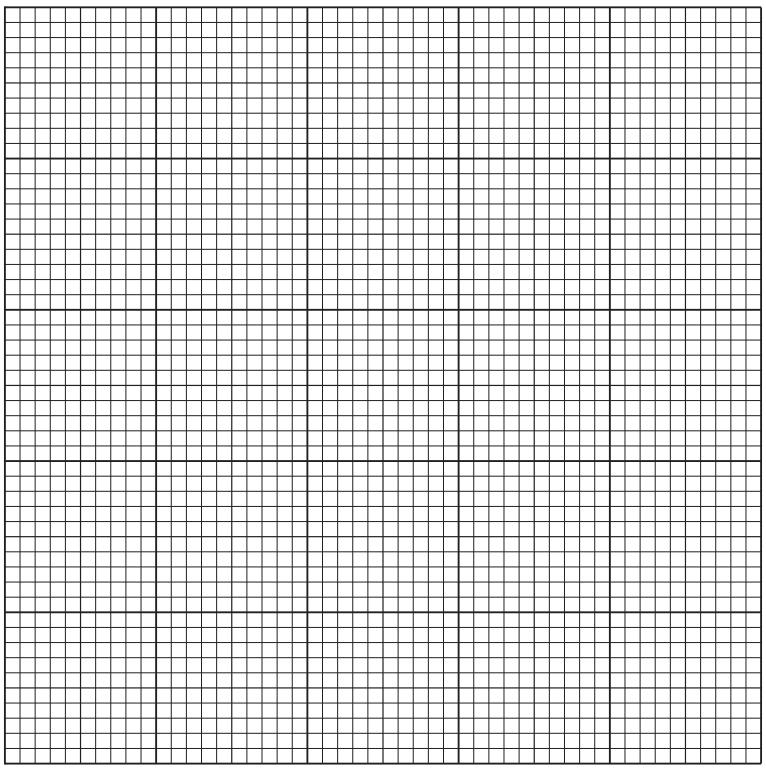

[3]

(ii) Draw the line of best fit. [1]

(b) A student suggests that a is directly proportional to b.

State whether the readings support this suggestion. Justify your answer by reference to the graph line.

.....

.....

.....[1]

View solution

(c) The student uses a balance to measure the mass m of the metre rule.

m = 120 g

- Calculate the value of mX, where $X = 0.05\,\text{N cm/g}$.

View solution

mX = ... N cm

- Use the value of a in the first row of Table 4.1 to calculate Pa, where $P = 1.00\,\text{N}$.
  P is the weight of load **P**. Include the unit.

Pa = ...

- Use the value of b in the first row of Table 4.1 to calculate Qb, where $Q = 0.80\,\text{N}$.
  Q is the weight of load **Q**.

Qb = ...

[2]

(d) A student states that Pa should be equal to Qb.

Look carefully at Fig. 4.1 and the information in **(c)** and suggest what the student has not realised.

.....

.....[1]

[Total: 8]

View solution

© UCLES 2017

5 A student is investigating the effect of draughts (moving air) on the rate of cooling of hot water.

View solution

The following apparatus is available to the student:

an electric fan with four speed settings
a supply of hot water
thermometer
250 cm^3 beaker
250 cm^3 measuring cylinder
stopwatch
clamp, boss and stand.

Plan an experiment to investigate the effect of draughts on the rate of cooling of hot water.

You should:

- explain briefly how you would carry out the investigation
- state the key variables that you would control
- draw a table, or tables, with column headings, to show how you would display your readings (you are **not** required to enter any readings in the table)
- explain how you would use your readings to reach a conclusion.

You may draw a diagram if it helps your explanation.

.....

.....

© UCLES 2017

.....

.....

.....

.....

.....

.....

.....

.....

.....

.....

.....

.....[7]

[Total: 7]

Permission to reproduce items where third-party owned material protected by copyright is included has been sought and cleared where possible. Every reasonable effort has been made by the publisher (UCLES) to trace copyright holders, but if any items requiring clearance have unwittingly been included, the publisher will be pleased to make amends at the earliest possible opportunity.

To avoid the issue of disclosure of answer-related information to candidates, all copyright acknowledgements are reproduced online in the Cambridge International Examinations Copyright Acknowledgements Booklet. This is produced for each series of examinations and is freely available to download at www.cie.org.uk after the live examination series.

Cambridge International Examinations is part of the Cambridge Assessment Group. Cambridge Assessment is the brand name of University of Cambridge Local Examinations Syndicate (UCLES), which is itself a department of the University of Cambridge.