Cambridge IGCSE

Cambridge International Examinations
Cambridge International General Certificate of Secondary Education

CANDIDATE NAME									
CENTRE NUMBER						CANDIDATE NUMBER			

PHYSICS **0625/63**

Paper 6 Alternative to Practical **May/June 2017**

1 hour

Candidates answer on the Question Paper.

No Additional Materials are required.

READ THESE INSTRUCTIONS FIRST

Write your Centre number, candidate number and name on all the work you hand in.
Write in dark blue or black pen.
You may use an HB pencil for any diagrams or graphs.
Do not use staples, paper clips, glue or correction fluid.
DO **NOT** WRITE IN ANY BARCODES.

Answer **all** questions.
Electronic calculators may be used.
You may lose marks if you do not show your working or if you do not use appropriate units.

At the end of the examination, fasten all your work securely together.
The number of marks is given in brackets [ ] at the end of each question or part question.

The syllabus is approved for use in England, Wales and Northern Ireland as a Cambridge International Level 1/Level 2 Certificate.

This document consists of **14** printed pages and **2** blank pages.

© UCLES 2017

CAMBRIDGE International Examinations

1 A student is determining the density of water by two methods.

Method 1

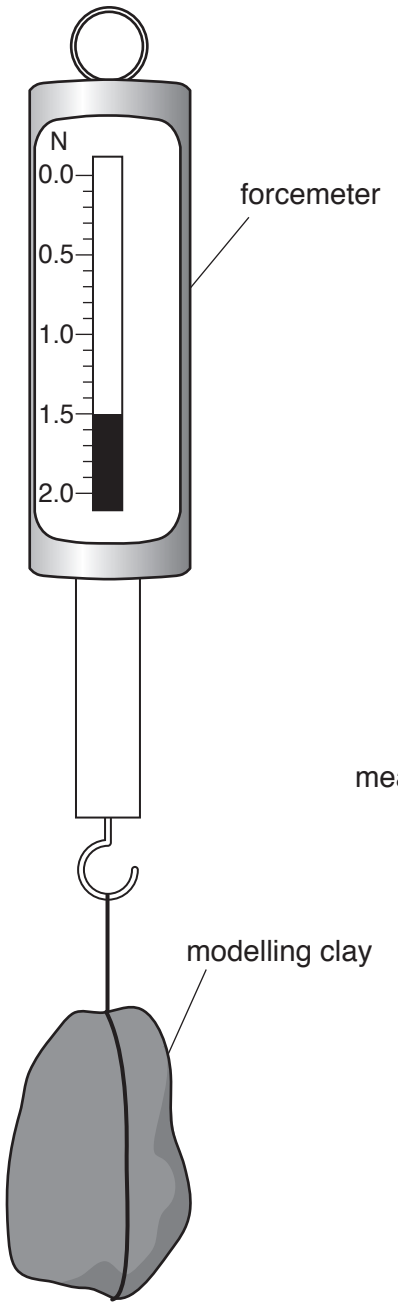

Fig. 1.1

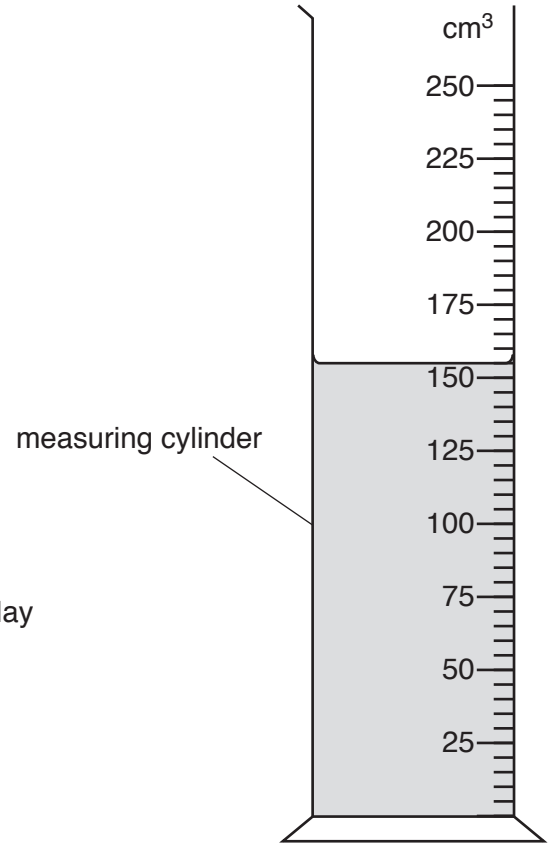

Fig. 1.2

(a) Record the weight W_1 of the piece of modelling clay shown in Fig. 1.1.

W_1 = ... N [1]

View solution

© UCLES 2017

(b) (i) Record the volume V_1 of the water in the measuring cylinder shown in Fig. 1.2.

V_1 = ... cm^3 [1]

(ii) Describe briefly how a measuring cylinder is read to obtain an accurate value for the volume of water. You may draw a diagram.

View solution

.....

.....

.....[2]

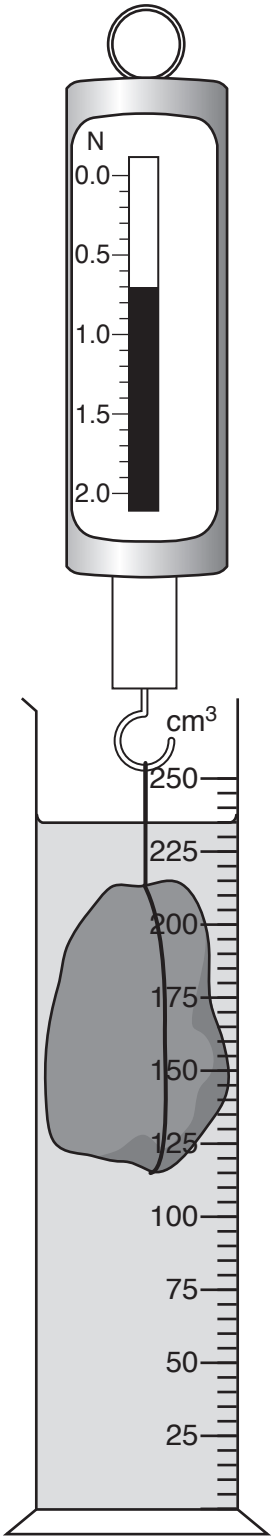

Fig. 1.3

© UCLES 2017

(c) The student lowers the modelling clay into the water, as shown in Fig. 1.3.

View solution

- Record the new reading W_2 of the forcemeter.

W_2 = ... N

- Record the new reading V_2 of the measuring cylinder, with the piece of modelling clay in the water.

V_2 = ... cm^3

[1]

(d) Calculate a value ρ_1 for the density of water, using your readings from **(a)**, **(b)** and **(c)** and the equation

View solution

$$\rho_1 = \frac{(W_1 - W_2)}{(V_2 - V_1)} \times k$$

where $k = 100\,g/N$.

ρ_1 = ...[2]

Method 2

(e) The student removes the modelling clay from the water and places the measuring cylinder on a balance.

View solution

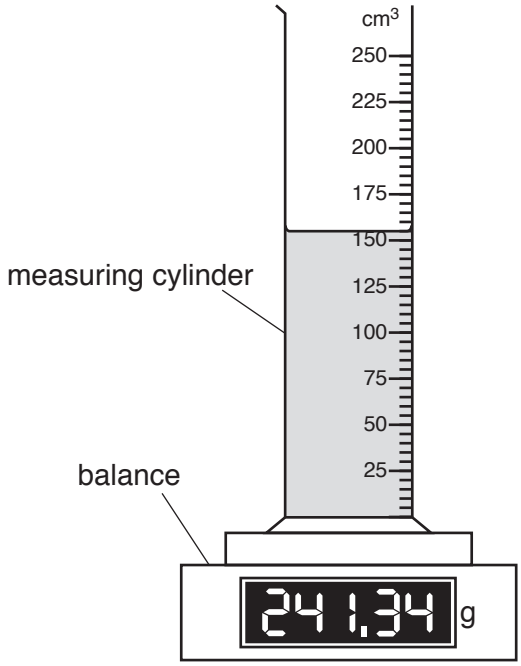

Fig. 1.4

The reading for the mass m_1 of the measuring cylinder and water is shown in Fig. 1.4.

Record m_1 to the nearest gram.

m_1 = ...[1]

(f) The student pours the water out of the measuring cylinder and measures the mass m_2 of the empty measuring cylinder.

m_2 = 93 g

- Calculate a second value ρ_2 for the density of water, using your readings from **(b)**, **(e)** and **(f)** and the equation

$$\rho_2 = \frac{(m_1 - m_2)}{V_1} .$$

View solution

ρ_2 = ...

- Calculate an average value ρ_{AV} for the density of water, using your results for ρ_1 and ρ_2.

ρ_{AV} = ...

[1]

(g) Suggest a possible source of inaccuracy in either **Method 1** or **Method 2**, even when they are carried out carefully.

View solution

Explain how an improvement might be made to reduce this inaccuracy.

suggestion .....

.....

improvement .....

.....

[2]

[Total: 11]

© UCLES 2017

2 Some students are investigating the resistance of a power supply.

They are using the circuit shown in Fig. 2.1.

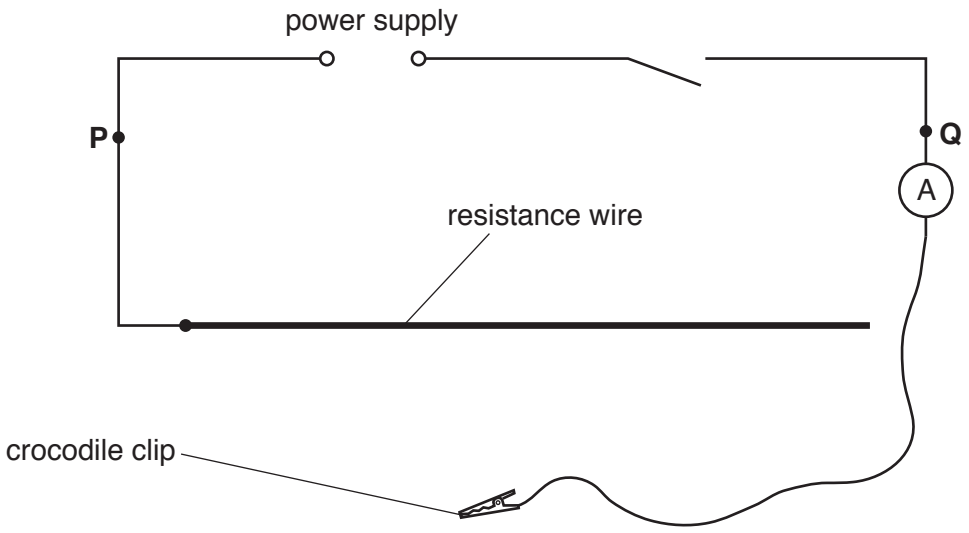

Fig. 2.1

(a) (i) A student connects the crocodile clip to the resistance wire at positions which give particular values of the potential difference V between terminals **P** and **Q**. He measures the current I in the circuit for each position.

On Fig. 2.1, draw a voltmeter connected to measure the potential difference V between terminals **P** and **Q**. [1]

View solution

(ii) Fig. 2.2 shows the ammeter reading for a value of $V = 2.2\,\text{V}$.

View solution

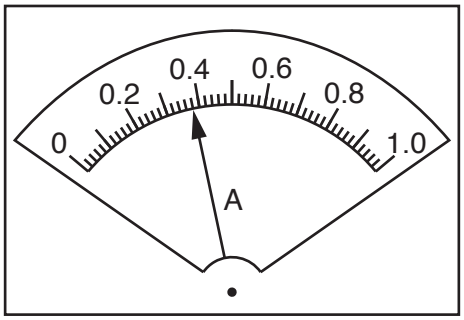

Fig. 2.2

Read, and record in Table 2.1, this value of I.

Table 2.1

I/A	V/V
	2.2
0.47	2.0
0.55	1.8
0.69	1.6
0.76	1.4

[1]

(b) Plot a graph of V/V (y-axis) against I/A (x-axis).

View solution

[4]

(c) **(i)** Determine the gradient *M* of the line you have drawn.

View solution

Show clearly on the graph how you obtained the necessary information.

M = ... [1]

(ii) The gradient *M* is numerically equal to the resistance *R* of the power supply.

View solution

Write down the resistance *R* to a suitable number of significant figures for this experiment.

R = ... [2]

(d) Suggest **one** practical reason why the crocodile clip should not be connected to very short lengths of resistance wire in order to obtain smaller potential differences.

.....

.....

.....[1]

(e) In this type of experiment, it is possible to change the potential difference by using a variable resistor rather than using different lengths of a resistance wire.

View solution

In the space below, draw the standard circuit symbol for a variable resistor.

[1]

[Total: 11]

3 A student is investigating the refraction of light by a transparent block.
She uses her results to determine a quantity known as the refractive index of the material of the block.

The student's ray-trace sheet is shown full size in Fig. 3.1.

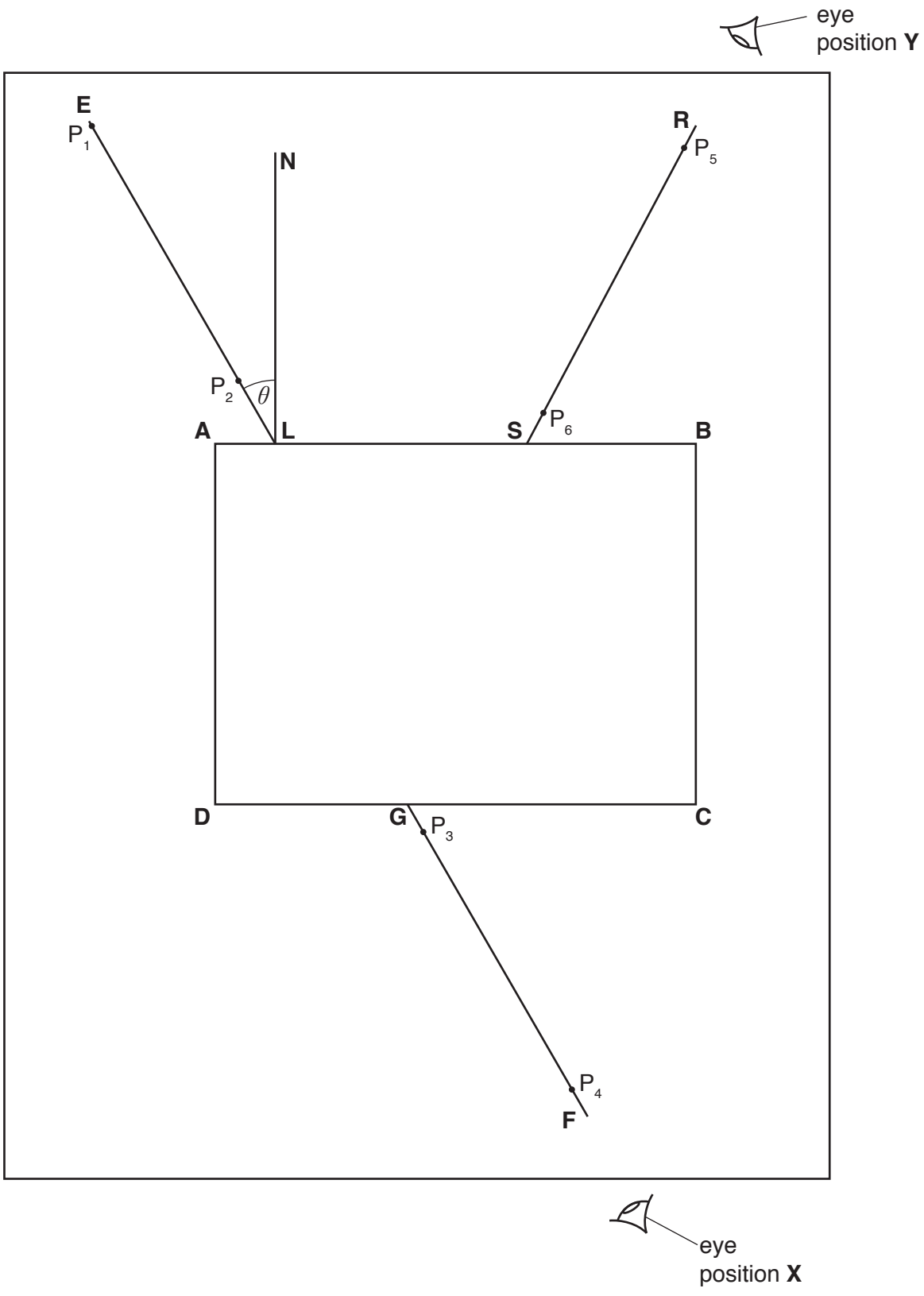

Fig. 3.1

© UCLES 2017

(a) The student places a transparent block **ABCD** at the centre of the ray-trace sheet, as indicated in Fig. 3.1. She draws round the block. She removes the block and then draws lines **NL** and **EL**.

View solution

Measure the angle θ between the lines **NL** and **EL**.

θ = ...[1]

(b) The student places two pins P_1 and P_2 on line **EL**, a suitable distance apart for accurate ray-tracing.

View solution

Suggest a suitable distance between the two pins.

distance = ...[1]

(c) The student replaces the block. She views the images of P_1 and P_2 through the block from the direction indicated by the eye in position **X** in Fig. 3.1.

She places two pins P_3 and P_4 so that pins P_3 and P_4, and the images of P_1 and P_2, all appear exactly one behind the other.

She labels the positions of P_3 and P_4 and then removes the block and pins from the ray-trace sheet.

View solution

She draws a line **FG** through P_3 and P_4, extending it as far as **CD**.

(i)
- Draw a normal to **CD** at point **G** and extend it to meet **AB**.
- Label the point at which this normal meets **AB** with the letter **H**.

[1]

(ii)

View solution

- Draw a line joining points **L** and **G**.
- Extend line **EL** until it meets **GH**.
- Label the point at which this line meets **GH** with the letter **K**.
- Measure the length a of line **LG**.

a = ... cm

- Measure the length b of line **LK**.

b = ... cm

[1]

(iii) Calculate a value n for the refractive index, using the equation $n = \frac{a}{b}$.

View solution

n = ...[2]

(d) The student places a mirror against side **CD**, with the reflecting surface facing towards the block.
She views the images of P_1 and P_2 from the direction indicated by the eye in position **Y** in Fig. 3.1.
She places two pins P_5 and P_6 so that pins P_5 and P_6, and the images of P_1 and P_2, all appear exactly one behind the other.

She labels the positions of P_5 and P_6 and then removes the mirror and the pins from the ray-trace.

View solution

The student draws a line **RS** through pins P_5 and P_6.

(i)
- Extend line **RS** until it meets **GH**.
- Label the point at which this line meets **GH** with the letter **T**.
- Measure the angle α, where α is the smaller angle between lines **RT** and **GH**.

α = ...
[2]

(ii) A student suggests that angle α and angle θ, measured in part **(a)**, should be equal.

State whether the results support this suggestion. Justify your answer with reference to the results.

statement .....

justification .....
[2]

(e) Suggest why different students, all carrying out this experiment carefully, may not obtain identical results.

.....

.....[1]

[Total: 11]

View solution

© UCLES 2017

4 Plan an experiment to investigate how increasing the number of layers of insulation affects the rate of cooling of hot water in a beaker.

View solution

Write a plan for the experiment, including:

- the apparatus needed
- what you would measure
- the variables you would keep the same to ensure the comparison is a fair test
- instructions for carrying out the experiment
- how you would present your results
- how you would use your readings to reach a conclusion.

You may draw a diagram if it helps to explain your plan.

.....

.....

.....

.....

.....

.....

.....

.....

.....

.....

.....

.....

.....

© UCLES 2017

.....

.....

.....

BLANK PAGE

© UCLES 2017

BLANK PAGE

Permission to reproduce items where third-party owned material protected by copyright is included has been sought and cleared where possible. Every reasonable effort has been made by the publisher (UCLES) to trace copyright holders, but if any items requiring clearance have unwittingly been included, the publisher will be pleased to make amends at the earliest possible opportunity.

To avoid the issue of disclosure of answer-related information to candidates, all copyright acknowledgements are reproduced online in the Cambridge International Examinations Copyright Acknowledgements Booklet. This is produced for each series of examinations and is freely available to download at www.cie.org.uk after the live examination series.

Cambridge International Examinations is part of the Cambridge Assessment Group. Cambridge Assessment is the brand name of University of Cambridge Local Examinations Syndicate (UCLES), which is itself a department of the University of Cambridge.

© UCLES 2017