Cambridge IGCSE

Cambridge International Examinations
Cambridge International General Certificate of Secondary Education

CANDIDATE NAME									
CENTRE NUMBER						CANDIDATE NUMBER			

PHYSICS **0625/32**

Paper 3 Theory (Core) **May/June 2018**

1 hour 15 minutes

Candidates answer on the Question Paper.

No Additional Materials are required.

READ THESE INSTRUCTIONS FIRST

Write your Centre number, candidate number and name on all the work you hand in.
Write in dark blue or black pen.
You may use an HB pencil for any diagrams or graphs.
Do not use staples, paper clips, glue or correction fluid.
DO **NOT** WRITE IN ANY BARCODES.

Answer **all** questions.
Electronic calculators may be used.
You may lose marks if you do not show your working or if you do not use appropriate units.
Take the weight of 1.0 kg to be 10 N (acceleration of free fall = 10 m/s^2).

At the end of the examination, fasten all your work securely together.
The number of marks is given in brackets [ ] at the end of each question or part question.

This syllabus is approved for use in England, Wales and Northern Ireland as a Cambridge International Level 1/Level 2 Certificate.

This document consists of **16** printed pages.

© UCLES 2018

1 Fig. 1.1 shows the speed-time graph for a car.

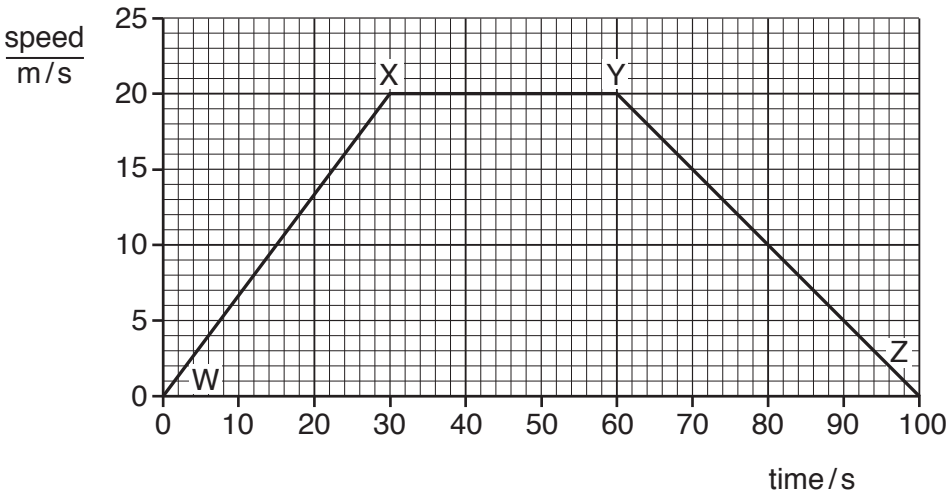

Fig. 1.1

(a) On Fig. 1.1, the labels W, X, Y and Z show the points when the car's motion changed.

View solution

On Fig. 1.2, draw a line from each section of the graph to the correct description of the motion.

section of graph	description of the motion
from W to X	accelerating
from X to Y	decelerating
from Y to Z	stationary
	constant speed

Fig. 1.2 [3]

(b) Calculate the distance that the car travels between 60 s and 100 s.

View solution

distance travelled = ... m [3]

(c) Fig. 1.1 shows that the car's acceleration is greater than its deceleration.

View solution

Explain how the graph shows this.

.....

.....[1]

[Total: 7]

2 Fig. 2.1 shows a wooden raft. The raft is made from 8 logs.
The logs are all of the same type of wood.

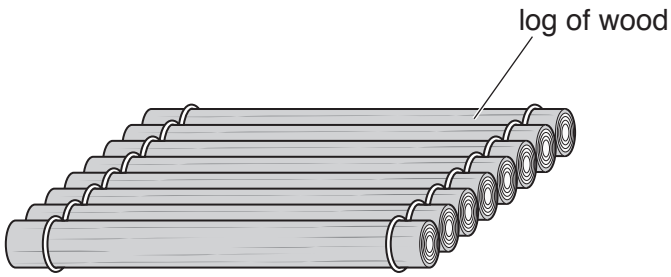

Fig. 2.1

(a) The average mass of each log is 65.0 kg.

View solution

Calculate the total weight of the raft.

total weight of the raft = ... N [3]

(b) (i) The mass of one of the logs is 66.0 kg. It is 3.0 m long and has a cross sectional area of 0.040 m^2.

View solution

Calculate the density of the wood in the log.

density = ... kg/m^3 [3]

(ii) Explain why the log in **(b)(i)** floats on water.

View solution

.....

.....[1]

[Total: 7]

3 A man uses a metal bar to remove an iron nail from a piece of wood, as shown in Fig. 3.1.

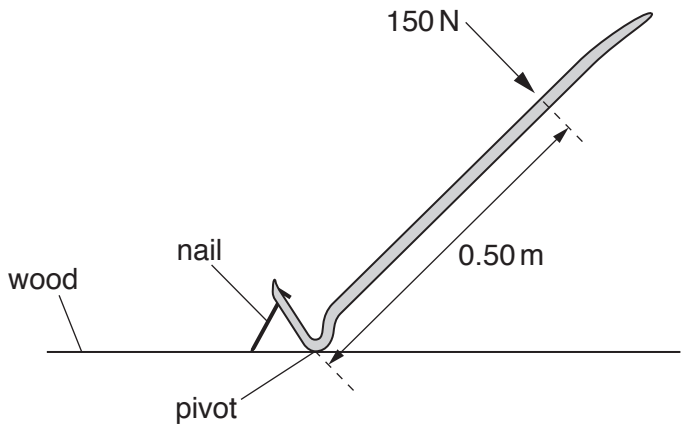

Fig. 3.1

(a) (i) The man applies a force of 150 N at a distance of 0.50 m from the pivot.

View solution

Calculate the moment of this force about the pivot. Include a unit.

moment = ...[4]

(ii) The force applied by the man produces a turning effect (moment) about the pivot.

View solution

Describe another example of using the turning effect of a force.

.....

.....[1]

(b) The man tries to use the metal bar to remove another nail from the piece of wood. He applies the same force of 150 N at a distance of 0.50 m from the pivot.

View solution

The turning effect produced is not enough to remove this nail from the piece of wood.

Describe how the man can increase the turning effect without increasing the force.

.....

.....[1]

[Total: 6]

© UCLES 2018

4 A Bunsen burner heats a beaker of water, as shown in Fig. 4.1.

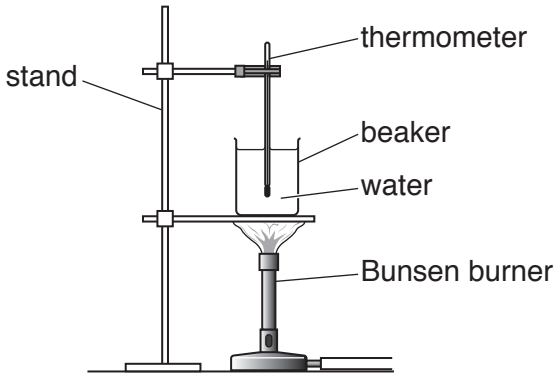

Fig. 4.1

(a) (i) Fig. 4.2 shows the thermometer used in Fig. 4.1.

View solution

State the temperature shown on the thermometer.

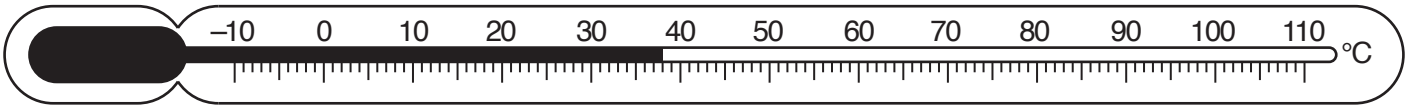

Fig. 4.2

temperature = ... °C [1]

(ii) The thermometer shown in Fig. 4.2 uses a physical property that changes with temperature.

View solution

Indicate the measurable property that changes with temperature. Tick **one** box.

- ☐ expansion of glass
- ☐ expansion of liquid
- ☐ colour of liquid
- ☐ colour of glass [1]

(b) Thermal energy (heat) transfers through the bottom of the beaker to the water.

View solution

State the name given to this process.

.....[1]

(c) Thermal energy transfers throughout the water in the beaker.

View solution

Describe and explain how this happens.

.....

.....

.....

.....

.....[4]

[Total: 7]

5 Fig. 5.1 represents an object positioned on the principal axis of a thin lens.

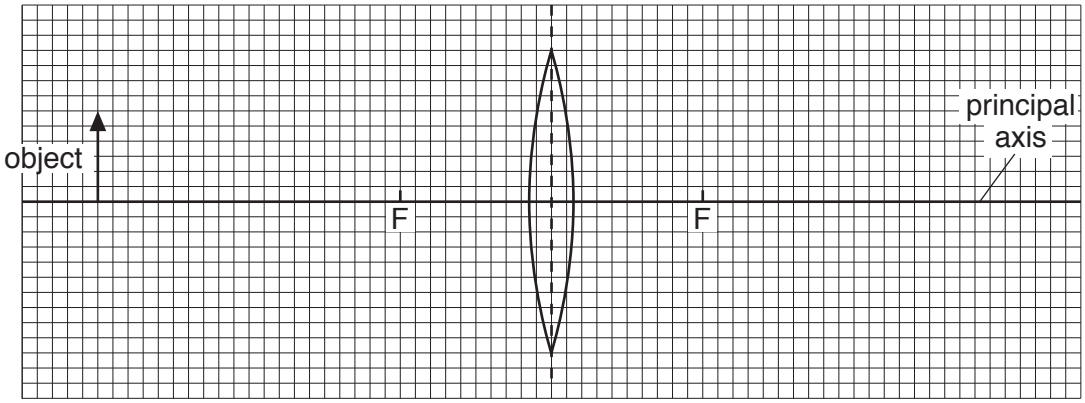

Fig. 5.1

Each small square of the grid represents 0.5 cm. Each principal focus of the lens is labelled F.

(a) Use the grid to determine the focal length of the lens.

View solution

focal length = ... cm [1]

(b) **(i)** On Fig. 5.1, draw a ray from the top of the object that passes through a principal focus, then through the lens and beyond it.

[1]

(ii) On Fig. 5.1, draw a second ray from the top of the object that passes through the centre of the lens. Continue the path of this ray to the edge of the grid. [1]

(iii) On Fig. 5.1, draw an arrow to show the position and nature of the image produced by the lens. [2]

[Total: 5]

View solution

6 Nuclear fission is used in nuclear power stations to release thermal energy.

(a) Describe how the thermal energy is used to generate electricity.

View solution

.....

.....

.....

.....

.....

.....[3]

(b) Describe two environmental problems that are due to using nuclear power stations.

View solution

1. .....

.....

2. .....

.....

[2]

[Total: 5]

© UCLES 2018

7 Fig. 7.1 shows some parts of the electromagnetic spectrum.

radio waves		infra-red waves	visible light	ultraviolet waves	X-rays	γ-rays

Fig. 7.1

(a) (i) In Fig. 7.1, one part of the electromagnetic spectrum is not labelled.

View solution

State the name of this part.

.....[1]

(ii) The speed of visible light waves in a vacuum is 3.0×10^8 m/s.

View solution

Suggest a value for the speed of infra-red waves in a vacuum.

speed = ... m/s [1]

(iii) Some parts of the electromagnetic spectrum have a wavelength shorter than that of visible light.

View solution

State one example.

.....[1]

(b) (i) X-rays and γ-rays are used in hospitals.

View solution

Describe one medical use for X-rays and one use for γ-rays.

X-rays .....

.....

γ-rays .....

.....

[2]

(ii) Explain why γ-rays are dangerous to living things.

View solution

.....

.....

.....[2]

[Total: 7]

© UCLES 2018

8 **(a)** Complete the sentences about sound. Use words from the box above each sentence.

View solution

(i)

glows	reflects	refracts	vibrates

Sound is produced when a source ..... . [1]

View solution

(ii)

electromagnetic	longitudinal	transverse

Sound waves are ..... waves. [1]

View solution

(iii)

metal	vacuum	liquid

Sound waves cannot travel through a ..... . [1]

(b) Humans, elephants, mice and dolphins have different hearing ranges. Fig. 8.1 shows the hearing range for each type of animal.

View solution

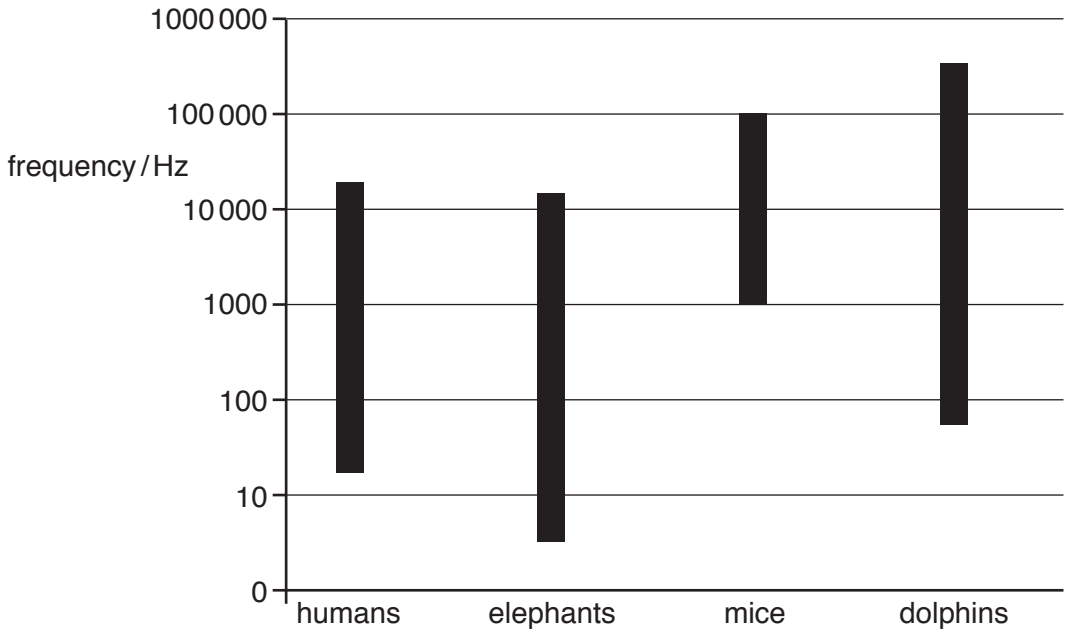

Fig. 8.1

(i) State the lowest frequency of sound that can be heard by mice.

..... Hz [1]

(ii) State the highest frequency of sound that can be heard by elephants.

..... Hz [1]

© UCLES 2018

(iii) Explain how the chart shows that elephants can hear some sounds that humans **cannot** hear.

.....

.....

.....[2]

(iv) State the term given to the high frequencies that dolphins can hear but humans **cannot** hear.

.....[1]

[Total: 8]

9 **(a)** Fig. 9.1 shows a simple circuit.

View solution

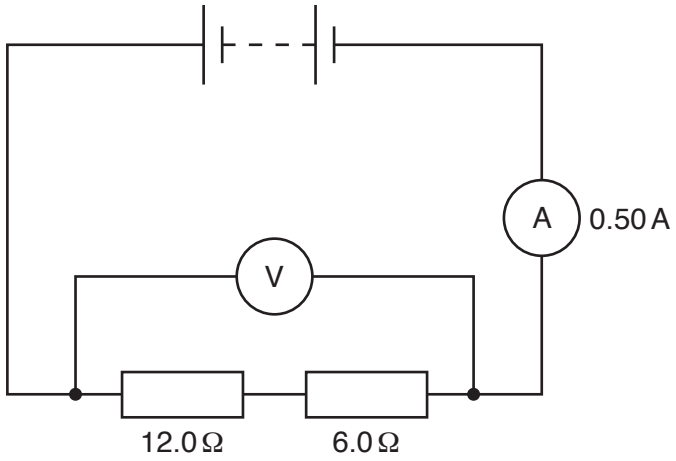

Fig. 9.1

(i) The current in the wires of the circuit is a flow of particles.
Indicate the name of these particles. Tick **one** box.

- ☐ electrons
- ☐ atoms
- ☐ protons [1]

(ii) Calculate the combined resistance of the two resistors.

View solution

resistance = ... Ω [1]

(iii) Calculate the potential difference (p.d.) reading that would be shown on the voltmeter.

View solution

potential difference (p.d.) = ... V [3]

(b) The circuit is changed.
The two resistors are connected in parallel.

View solution

Explain what happens, if anything, to the current reading on the ammeter.

.....

.....

.....[2]

[Total: 7]

© UCLES 2018

10 (a) Fig. 10.1 shows a balloon hanging from an insulating thread.

View solution

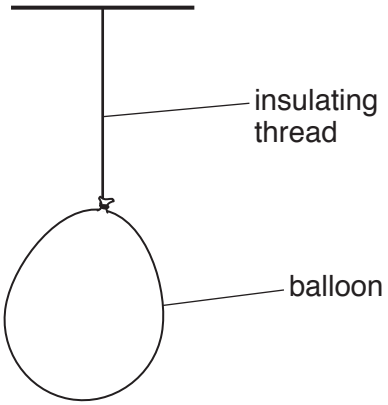

Fig. 10.1

(i) A student gives the balloon a positive charge.

Which statement explains why the balloon becomes positively charged? Tick **one** box.

- ☐ The balloon gains electrons
- ☐ The balloon loses electrons
- ☐ The balloon gains protons
- ☐ The balloon loses protons [1]

(ii) The student brings a charged rod close to the balloon as shown in Fig. 10.2.

View solution

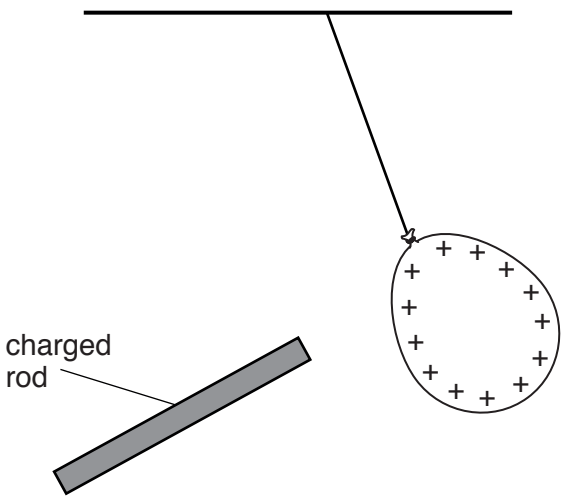

Fig. 10.2

State the type of charge on the rod.

.....

Explain your answer.

.....

.....

[2]

(b) Electrical charges can move easily through some materials.

View solution

Draw a circle around each material that charges can move through easily.

copper plastic rubber silver wood [1]

[Total: 4]

© UCLES 2018

11 Fig. 11.1 represents a transformer.

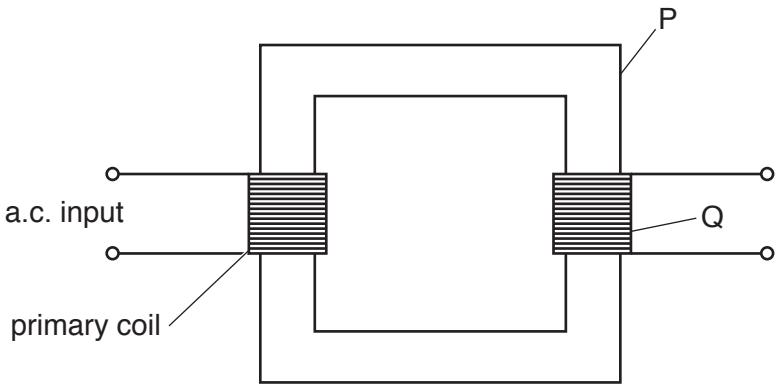

Fig. 11.1

(a) **(i)** State the name of the part of the transformer labelled Q in Fig. 11.1.

View solution

.....[1]

(ii) In Fig. 11.1, part P is made from a metal.

View solution

1. State the metal used to make part P. .....

2. State the term given to part P. .....

[2]

(iii) There is an alternating current (a.c.) in the primary coil.

View solution

Describe what this current produces in part P.

.....

.....[2]

(iv) Complete the sentence using terms from the box.

View solution

more	fewer	step-up	step-down

When there are ..... turns in the primary coil than in Q, the device is called a

..... transformer. [1]

(b) The high-voltage transmission of electricity uses transformers.

View solution

Describe **two** advantages of transmitting electricity at high voltages rather than at low voltages.

1. .....

.....

2. .....

.....

[2]

[Total: 8]

12 (a) The nuclide notation ${}^{A}_{Z}X$ describes the nucleus of one type of atom.

View solution

Draw a line from each symbol to the correct description for that symbol.

symbol	description
A	number of neutrons
	element symbol
Z	proton number
	nucleon number
X	number of atoms

[3]

(b) (i) One radioactive isotope has a half-life of 6.0 years.
A sample of this isotope has a mass of 12 mg.

View solution

Calculate the mass of this isotope that remains in the sample after 18 years.

mass remaining = ... mg [3]

(ii) The sample decays by emitting a β-particle.

Describe the nature of a β-particle.

.....

.....[2]

(iii) Describe how the nucleus of the isotope changes due to the emission of a β-particle.

.....

.....[1]

[Total: 9]

Permission to reproduce items where third-party owned material protected by copyright is included has been sought and cleared where possible. Every reasonable effort has been made by the publisher (UCLES) to trace copyright holders, but if any items requiring clearance have unwittingly been included, the publisher will be pleased to make amends at the earliest possible opportunity.

To avoid the issue of disclosure of answer-related information to candidates, all copyright acknowledgements are reproduced online in the Cambridge International Examinations Copyright Acknowledgements Booklet. This is produced for each series of examinations and is freely available to download at www.cie.org.uk after the live examination series.

Cambridge International Examinations is part of the Cambridge Assessment Group. Cambridge Assessment is the brand name of University of Cambridge Local Examinations Syndicate (UCLES), which is itself a department of the University of Cambridge.

© UCLES 2018