Cambridge IGCSE

Cambridge International Examinations
Cambridge International General Certificate of Secondary Education

CANDIDATE NAME									
CENTRE NUMBER						CANDIDATE NUMBER				

PHYSICS **0625/33**

Paper 3 Theory (Core) **May/June 2018**

1 hour 15 minutes

Candidates answer on the Question Paper.

No Additional Materials are required.

READ THESE INSTRUCTIONS FIRST

Write your Centre number, candidate number and name on all the work you hand in.
Write in dark blue or black pen.
You may use an HB pencil for any diagrams or graphs.
Do not use staples, paper clips, glue or correction fluid.
DO **NOT** WRITE IN ANY BARCODES.

Answer **all** questions.
Electronic calculators may be used.
You may lose marks if you do not show your working or if you do not use appropriate units.
Take the weight of 1.0 kg to be 10 N (acceleration of free fall = 10 m/s^2).

At the end of the examination, fasten all your work securely together.
The number of marks is given in brackets [ ] at the end of each question or part question.

This syllabus is approved for use in England, Wales and Northern Ireland as a Cambridge International Level 1/Level 2 Certificate.

This document consists of **16** printed pages.

© UCLES 2018

CAMBRIDGE International Examinations

1 A student watches a car race around a track. He uses a stopwatch to measure the time for the car to make one lap of the track.

(a) The student forgets to reset the stopwatch at the start of the race. Fig. 1.1 shows the time on the stopwatch at the start and the time after going around the track once.

View solution

time at start



time after going around the track once



Fig. 1.1

Calculate the time the car takes to go around the track once, in seconds.

time = ... s [2]

(b) The length of the track is 4.0 km. The car goes around the track 20 times. The car takes 26 minutes and 40 seconds to complete the 20 laps.

View solution

Calculate the average speed of the car in m/s.

average speed = ... m/s [4]

© UCLES 2018

(c) Fig. 1.2 shows a speed-time graph for the car during part of the race.

View solution

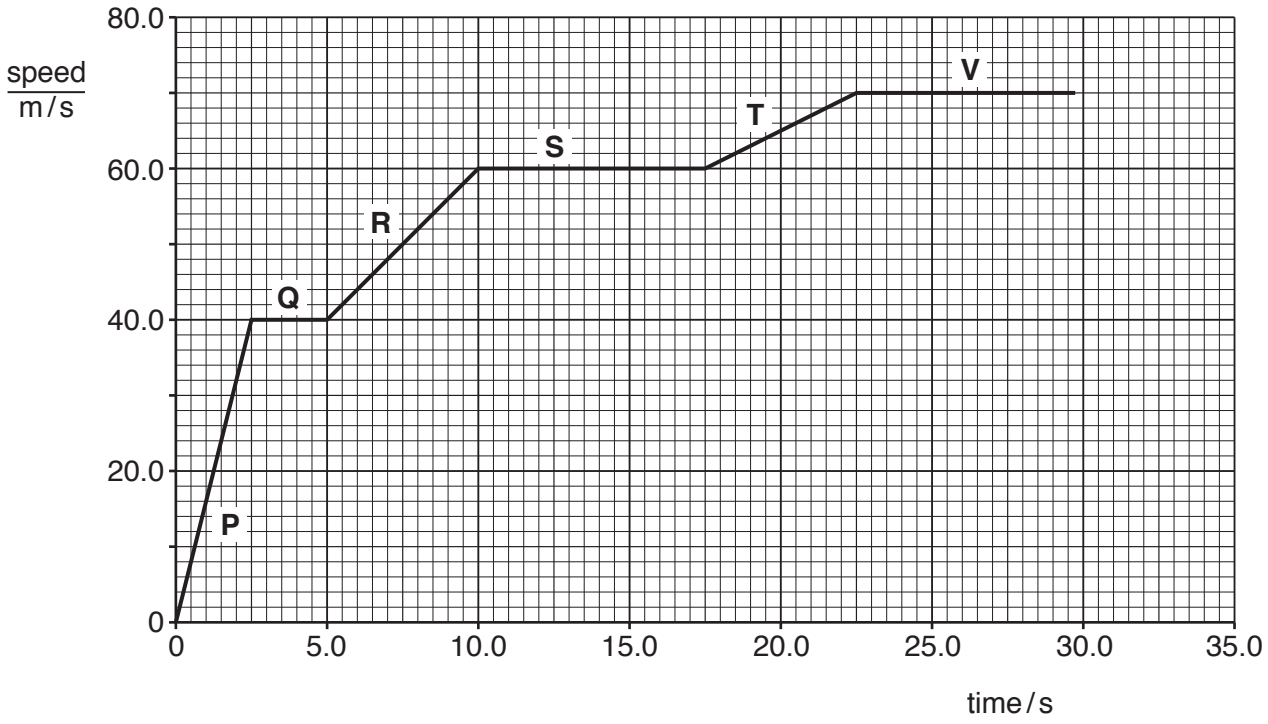

Fig. 1.2

(i) State the section of the graph that shows the greatest acceleration.

.....

Explain your answer.

.....

[2]

(ii) Calculate the distance travelled by the car during the first 2.5 seconds.

View solution

distance = ... m [3]

[Total: 11]

2 A student is using some 50 g masses.

(a) Calculate the weight of one 50 g mass.

View solution

weight of 50 g mass = ... N [3]

(b) The student uses the 50 g masses as loads to stretch a spring.

Fig. 2.1 shows the apparatus the student uses to obtain readings for a load-extension graph.

View solution

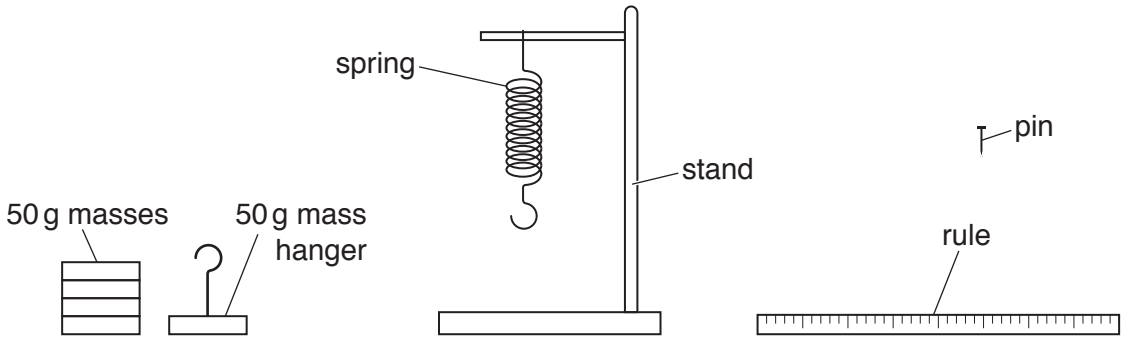

Fig. 2.1 (NOT to scale)

Describe how the student could use the apparatus and ensure that the readings are accurate.

.....

.....

.....

.....

.....

.....

.....

.....

.....

.....[4]

[Total: 7]

© UCLES 2018

3 **(a)** The mass of a small steel ball is 120 g. The volume of the ball is 16.0 cm^3.

View solution

(i) Calculate the density of the steel ball.

density = ... g/cm^3 [3]

(ii) The ball falls to the ground from rest. At a time of 0.2 s after it started to fall, its acceleration is 10 m/s^2.

View solution

State the acceleration of the ball at a time of 0.1 s after it started to fall.

.....[1]

(b) Fig. 3.1 shows the vertical forces that act on a large plastic ball as it is falling.

View solution

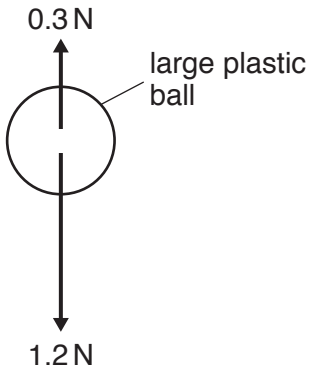

Fig. 3.1 (not to scale)

(i) State the name given to each of the forces shown in Fig. 3.1.

1. .....

2. .....

[1]

(ii) Calculate the size of the resultant force on the ball.

View solution

resultant force = ... N [1]

[Total: 6]

© UCLES 2018

4 A lamp is attached to a wall, as shown in Fig. 4.1.

View solution

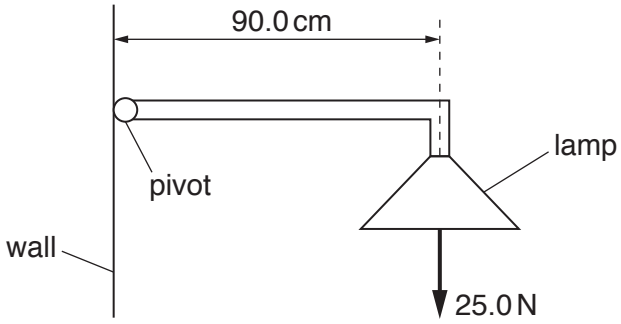

Fig. 4.1

Calculate the moment of the lamp about the pivot. Give the unit.

moment = ... [4]

[Total: 4]

© UCLES 2018

5 **(a)** Fig. 5.1 shows a metal can containing air. The can is sealed with a lid.

View solution

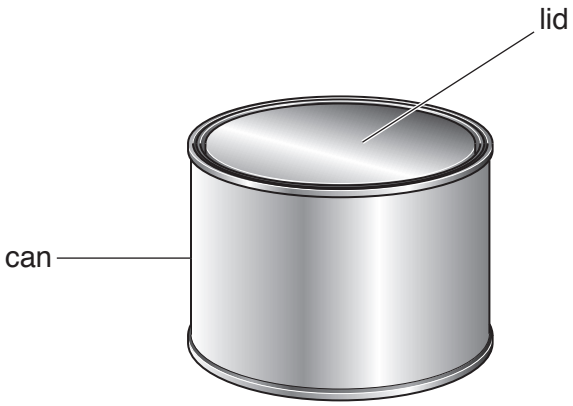

Fig. 5.1

The air in the can exerts a pressure of 20 000 N / m^2 on the lid. The area of the can lid is 0.09 m^2.

Calculate the force on the lid due to the air in the can.

force = ... N [3]

(b) The air in the can becomes warmer.

State and explain what happens to the pressure of the air in the can. Use your ideas about gas molecules.

.....

.....

.....

.....

.....

.....

.....[3]

[Total: 6]

View solution

6 A student investigates the thermal energy lost from two metal cans, X and Y. The cans are identical apart from their outside colour.

The student pours the same volume of hot water into each can and seals each can. The student records the temperature of the water in each can at regular time intervals for a period of 35 minutes.

The equipment is shown in Fig. 6.1.

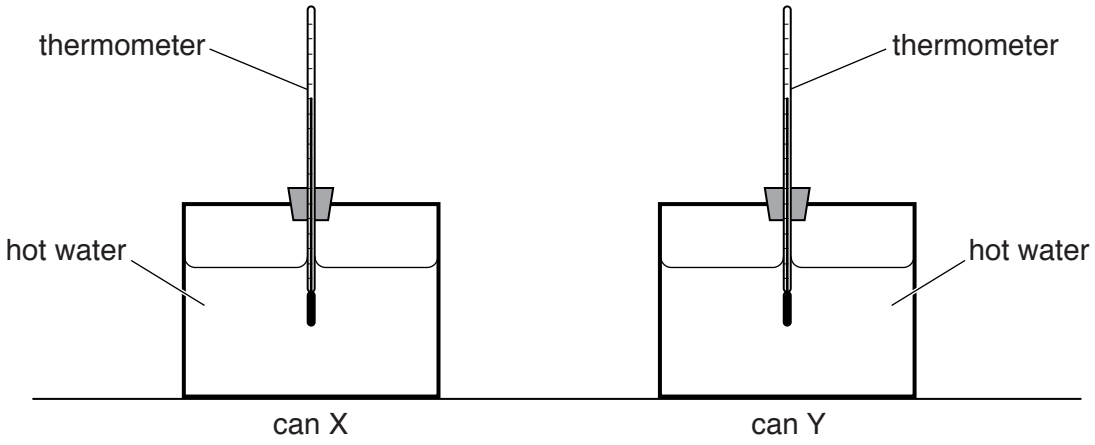

Fig. 6.1

Fig. 6.2 is a graph of the results from the investigation.

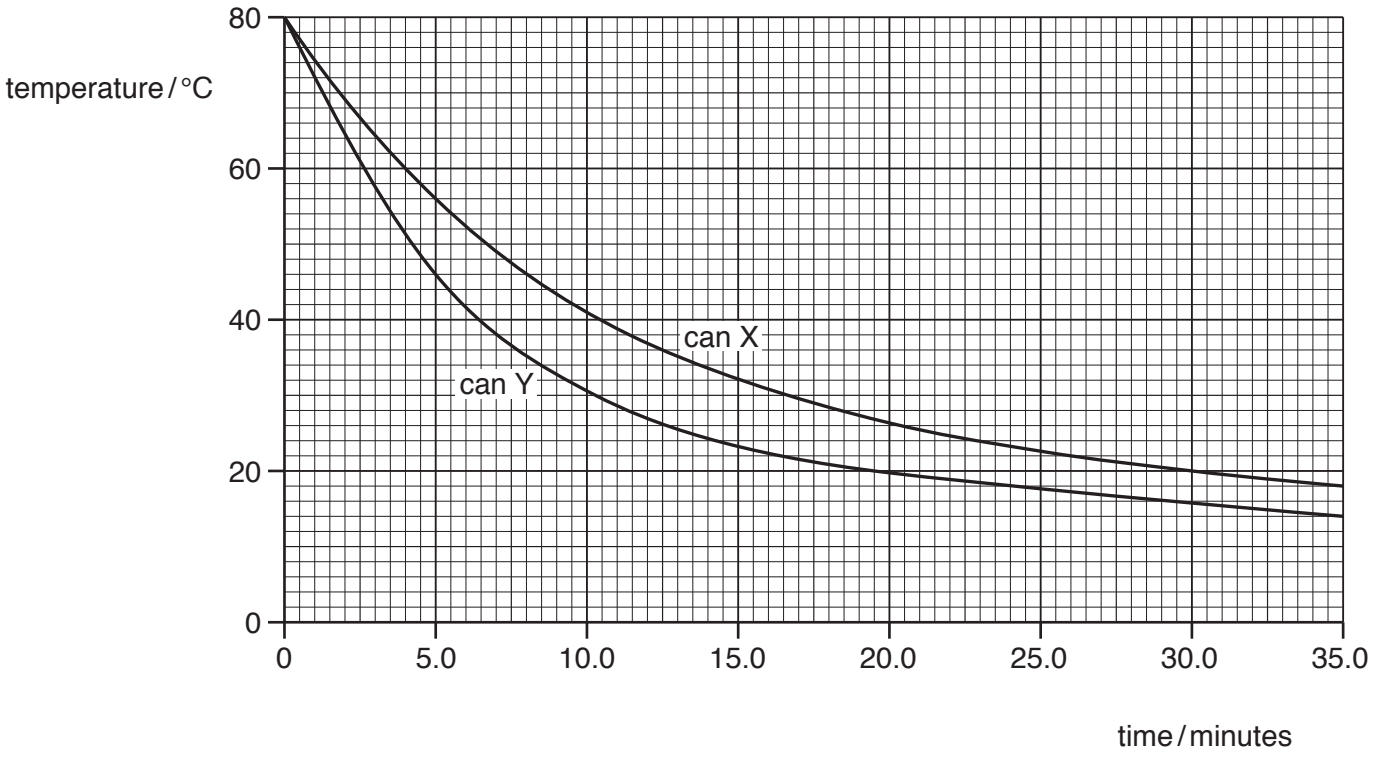

Fig. 6.2

© UCLES 2018

(a) For can X, use Fig. 6.2 to determine the drop in temperature of the water

View solution

(i) in the first five minutes

.....[1]

(ii) in the last five minutes.

View solution

.....[1]

(b) Explain why the water cools at a greater rate during the first five minutes of the experiment, compared with the last five minutes.

.....

.....

.....[2]

(c) The outside of one can is dull black and the outside of the other is shiny white.

View solution

State the colour of can Y. .....

Explain your answer.

.....

.....

.....

[2]

[Total: 6]

7 Fig. 7.1 shows an incomplete diagram of the electromagnetic spectrum.

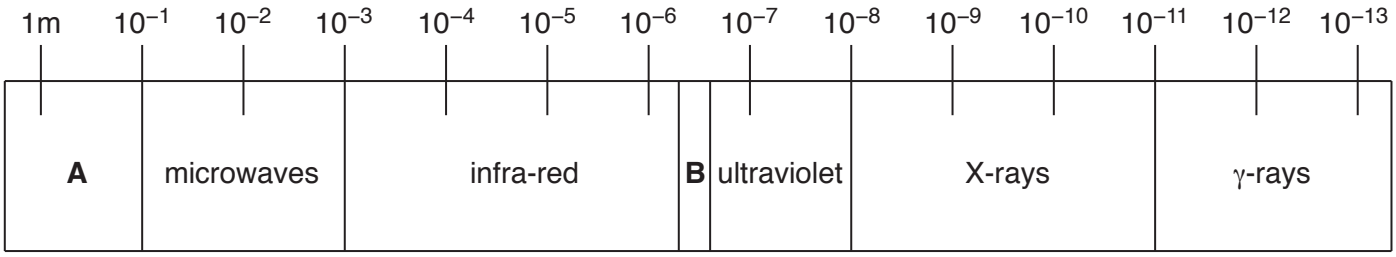

Fig. 7.1

(a) (i) In Fig. 7.1, section **A** and section **B** of the electromagnetic spectrum are not labelled.

View solution

State the names of these parts.

A .....

B .....

[2]

(ii) An electromagnetic wave has a wavelength of 1.0×10^{-9} m. Use Fig. 7.1 to identify the type of electromagnetic wave.

.....[1]

(b) All electromagnetic waves travel at the same speed in a vacuum.

View solution

State one other property that is the same for all electromagnetic waves.

.....[1]

(c) For each purpose, state one type of electromagnetic radiation that can be used.

View solution

(i) remote controllers for televisions

.....[1]

(ii) killing bacterial cells

.....[1]

[Total: 6]

View solution

8 **(a)** The boxes contain words about waves.

View solution

Complete each sentence. Choose a term from each box.

(i)

an electromagnetic	a longitudinal	a transverse

Sound travels as ..... wave. [1]

(ii)

amplitude	pitch	speed	wavelength

View solution

A loud sound has a large ..... . [1]

(iii)

amplitude	pitch	speed	wavelength

View solution

A student listens to two sounds. The sound with the higher frequency has a higher ..... . [1]

(b) Explain what is meant by the term *ultrasound*.

View solution

.....

.....[2]

[Total: 5]

9 A student magnetises a steel rod by using a permanent magnet.

(a) Describe a method that the student could use. You may draw a diagram to help you.

View solution

.....

.....

.....[2]

(b) Explain how the student could test that the steel rod has been magnetised.

View solution

.....

.....

.....

.....[2]

(c) Magnets can be made from soft iron or from steel.

View solution

State **one** difference between the magnetic properties of soft iron and steel.

.....

.....

.....[1]

[Total: 5]

© UCLES 2018

10 (a) Fig. 10.1 shows an electrical circuit.

View solution

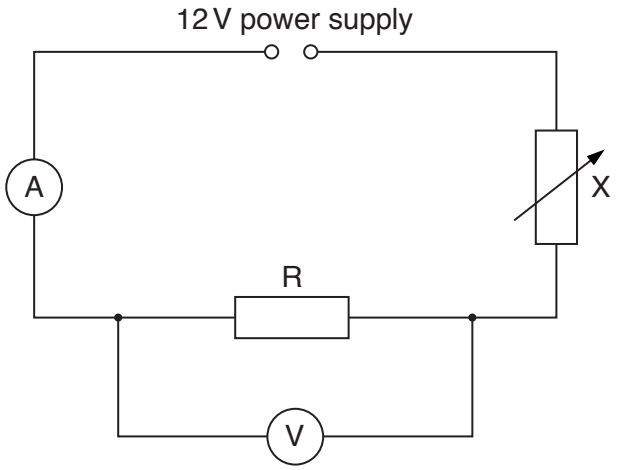

Fig. 10.1

(i) State the name for the component labelled X and state its function in this circuit.

name for component .....

function .....

.....

[2]

(ii) Describe how the circuit shown in Fig. 10.1 could be used to find the resistance of the fixed resistor R.

.....

.....

.....

.....

.....[3]

(b) An electrical heater has a resistance of 21.8 Ω when connected to a 240 V mains supply.

View solution

(i) Calculate the current in the heater.

current = ... A [3]

(ii) Suggest a rating for the fuse to be fitted to the mains plug for the heater.

View solution

fuse rating = ... A [1]

[Total: 9]

© UCLES 2018

11 Fig. 11.1 shows a coil (solenoid) wrapped around a plastic tube. There is a current in the coil. The arrows show the direction of the current in the coil.

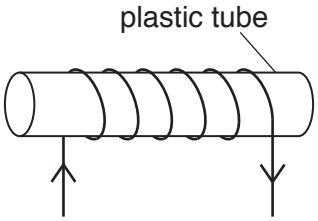

Fig. 11.1

View solution

(a) On Fig. 11.1, draw the pattern of the magnetic field lines around the coil. Add arrows to show the direction of the magnetic field. [3]

(b) A long soft iron bar is placed inside the plastic tube. There is a current in the coil. This forms a device. State the name of the device.

.....[1]

View solution

© UCLES 2018

(c) Fig. 11.2 shows a relay operated by switch S.

View solution

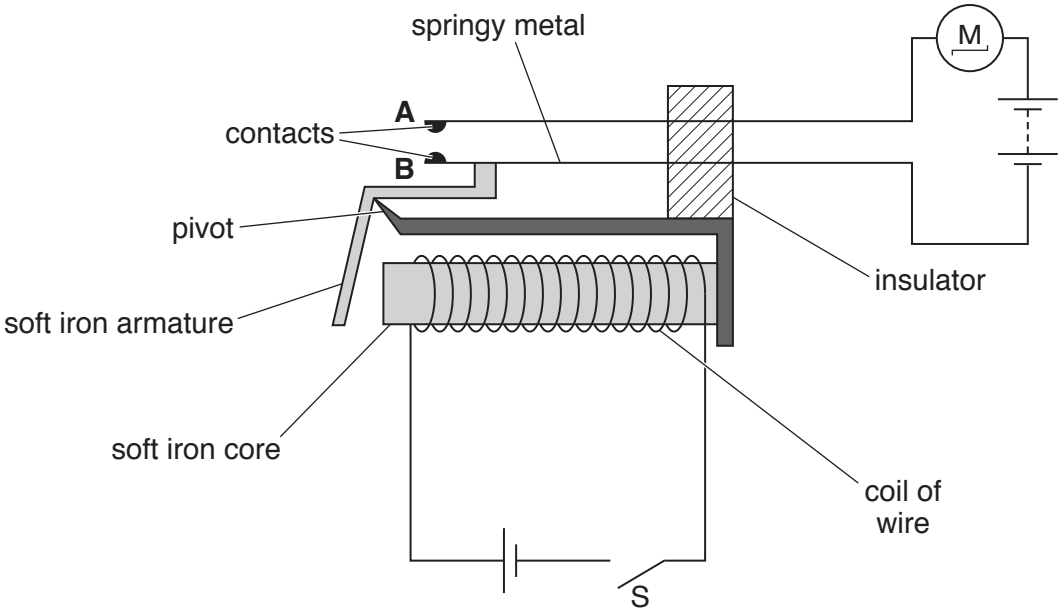

Fig. 11.2

Using Fig. 11.2, describe how closing the switch, S, causes the electric motor to operate.

.....

.....

.....

.....

.....

.....

.....[4]

[Total: 8]

12 **(a)** Fig. 12.1 shows a diagram to represent a helium atom, and an incomplete key.

View solution

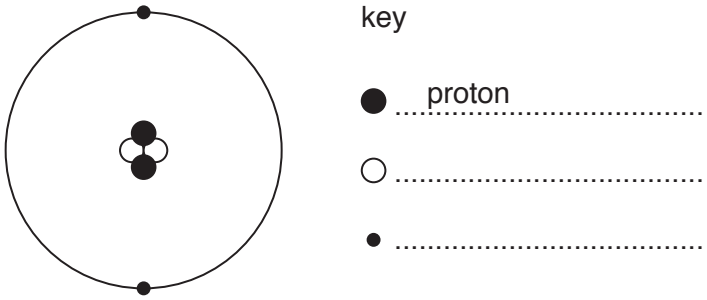

Fig. 12.1

Complete the key in Fig. 12.1. State the name of each particle. [2]

(b) The table in Fig. 12.2 compares two isotopes of helium.

View solution

	$^{3}_{2}He$	$^{5}_{2}He$
number of protons		
number of neutrons		

Fig. 12.2

For each isotope, write the number of protons and the number of neutrons in the correct places in the table. [2]

(c) The nucleus of the helium atom in **(a)** is the same as an α-particle.

View solution

(i) Describe the penetrating ability of α-particles.

.....

.....[1]

(ii) Explain why it is dangerous to swallow a source that emits α-particles.

View solution

.....

.....

.....

.....[2]

[Total: 7]

Permission to reproduce items where third-party owned material protected by copyright is included has been sought and cleared where possible. Every reasonable effort has been made by the publisher (UCLES) to trace copyright holders, but if any items requiring clearance have unwittingly been included, the publisher will be pleased to make amends at the earliest possible opportunity.

To avoid the issue of disclosure of answer-related information to candidates, all copyright acknowledgements are reproduced online in the Cambridge International Examinations Copyright Acknowledgements Booklet. This is produced for each series of examinations and is freely available to download at www.cie.org.uk after the live examination series.

Cambridge International Examinations is part of the Cambridge Assessment Group. Cambridge Assessment is the brand name of University of Cambridge Local Examinations Syndicate (UCLES), which is itself a department of the University of Cambridge.

© UCLES 2018