Cambridge IGCSE

Cambridge International Examinations
Cambridge International General Certificate of Secondary Education

CANDIDATE NAME									
CENTRE NUMBER						CANDIDATE NUMBER				

PHYSICS **0625/43**

Paper 4 Theory (Extended) **May/June 2018**

1 hour 15 minutes

Candidates answer on the Question Paper.

No Additional Materials are required.

READ THESE INSTRUCTIONS FIRST

Write your Centre number, candidate number and name on all the work you hand in.
Write in dark blue or black pen.
You may use an HB pencil for any diagrams or graphs.
Do not use staples, paper clips, glue or correction fluid.
DO **NOT** WRITE IN ANY BARCODES.

Answer **all** questions.
Electronic calculators may be used.
You may lose marks if you do not show your working or if you do not use appropriate units.
Take the weight of 1.0 kg to be 10 N (acceleration of free fall = 10 m/s^2).

At the end of the examination, fasten all your work securely together.
The number of marks is given in brackets [ ] at the end of each question or part question.

This syllabus is approved for use in England, Wales and Northern Ireland as a Cambridge International Level 1/Level 2 Certificate.

This document consists of **15** printed pages and **1** blank page.

© UCLES 2018

CAMBRIDGE International Examinations

1 There is no atmosphere on the Moon.

A space probe is launched from the surface of the Moon. Fig. 1.1 shows the speed-time graph of the space probe.

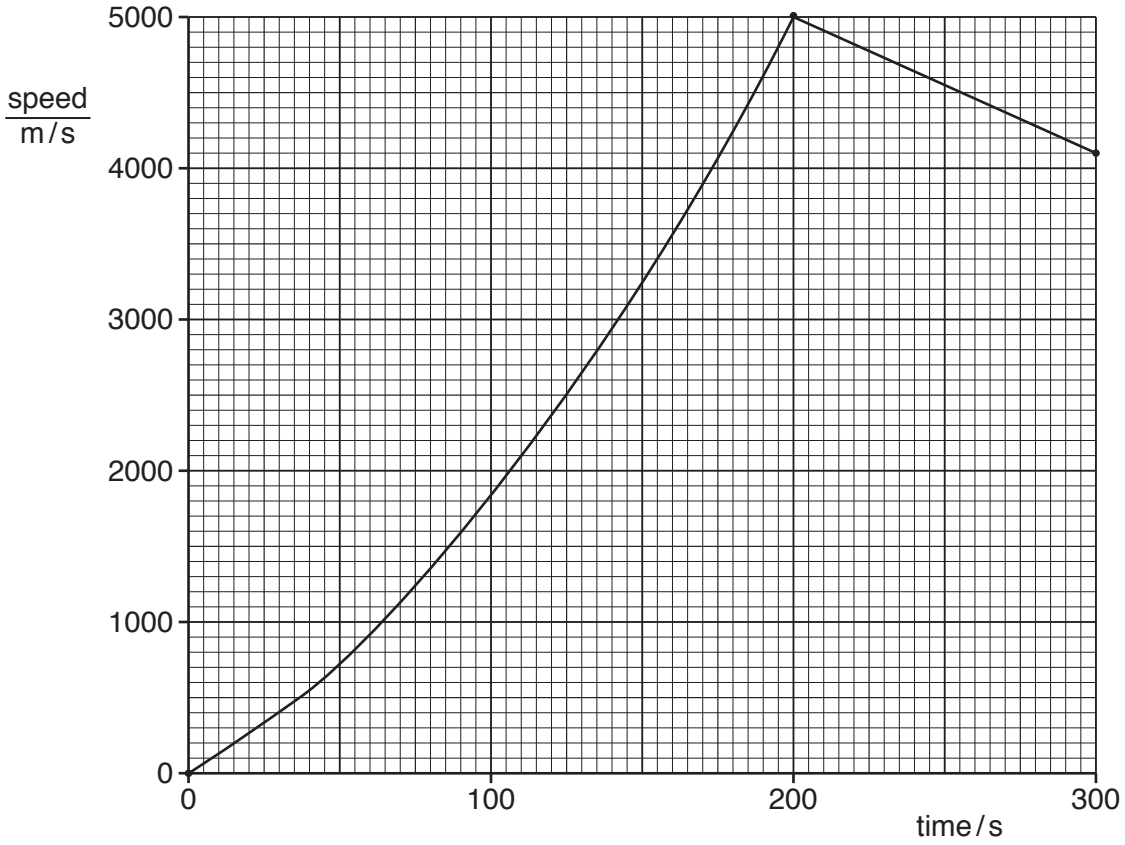

Fig. 1.1

(a) Determine the acceleration of the space probe at time = 0.

View solution

acceleration = ...[3]

(b) Between time = 0 and time = 150 s, the acceleration of the space probe changes.

View solution

(i) Without calculation, state how the graph shows this.

.....

.....[1]

© UCLES 2018

(ii) During this time, the thrust exerted on the space probe by the motor remains constant.

State one possible reason why the acceleration changes in the way shown by Fig. 1.1.

.....

.....[1]

(c) Calculate the distance travelled by the space probe from time = 200 s to time = 300 s.

View solution

distance = ...[3]

[Total: 8]

2 A rifle fires a bullet of mass 0.020 kg vertically upwards through the air. As it leaves the rifle, the speed of the bullet is 350 m / s.

(a) Calculate

(i) the kinetic energy of the bullet as it leaves the rifle,

View solution

kinetic energy = ...[3]

(ii) the maximum possible height that the bullet can reach.

View solution

maximum height = ...[2]

(b) The actual height reached by the bullet is less than the value calculated in **(a)(ii)**.

View solution

(i) Explain, in terms of the forces acting on the bullet, why this is so.

.....

.....

.....[2]

(ii) As the bullet rises through the air, its kinetic energy decreases.

View solution

State what happens to this energy.

.....

.....

.....[2]

[Total: 9]

© UCLES 2018

3 On a particular day, the atmospheric pressure is 1.0×10^5 Pa. A bubble of gas forms at a point 5.0 m below the surface of a lake. The density of water is 1000 kg / m^3.

(a) Determine

View solution

(i) the total pressure at a depth of 5.0 m in the water,

pressure = ...[3]

(ii) the pressure of the gas in the bubble.

View solution

pressure = ...[1]

(b) As the bubble rises to the surface, the mass of gas in the bubble stays constant. The temperature of the water in the lake is the same throughout.

View solution

Explain why the bubble rises to the surface and why its volume increases as it rises.

.....

.....

.....

.....

.....

.....[3]

[Total: 7]

4 A beaker contains some water at room temperature. A student places a mercury-in-glass thermometer in the water with the bulb of the thermometer just beneath the surface of the water.

Fig. 4.1 shows the arrangement.

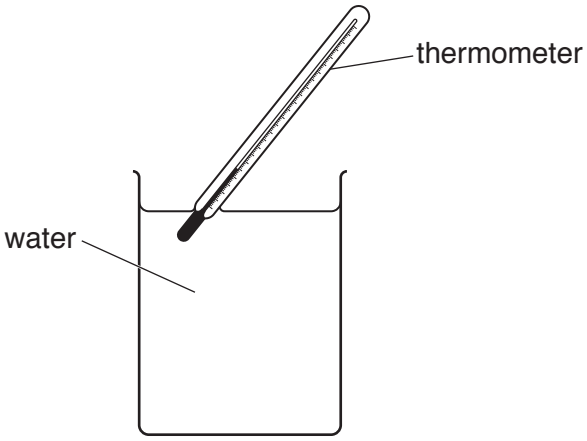

Fig. 4.1

View solution

The student uses an electric fan to blow air across the open top of the beaker. She notices that the reading on the thermometer begins to decrease.

(a) Explain, in terms of water molecules, why the temperature of the water at the surface begins to decrease.

.....

.....

.....

.....

.....[3]

(b) The student places the thermometer near the bottom of the beaker. The electric fan continues to blow air across the top of the beaker. After some time, the student observes that the temperature of the water at the bottom of the beaker is decreasing.

State the name of the thermal transfer method causing this and explain what is happening in the water.

.....

.....

.....

.....

.....[3]

© UCLES 2018

(c) The thermometer used in this experiment has a small range and a large sensitivity.

View solution

(i) State what is meant by

1. *range*,

.....

.....[1]

2. *sensitivity*.

.....

.....[1]

(ii) State and explain the effect on the range of the thermometer of using a smaller bulb that contains less mercury.

.....

.....[1]

[Total: 9]

View solution

5 **(a)** A microscope that produces a very high magnification is used to observe the Brownian motion of smoke particles in air.

Fig. 5.1(a) shows the apparatus used with the microscope. Fig. 5.1(b) represents the view through the microscope and shows one of the smoke particles being observed.

View solution

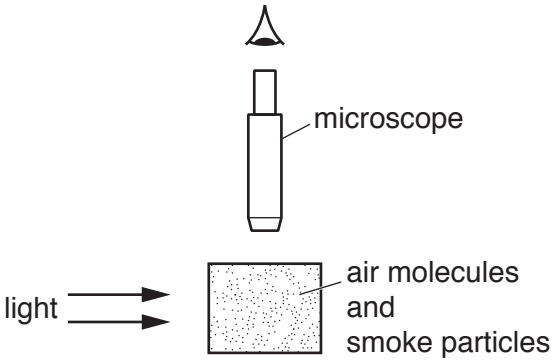

Fig. 5.1(a)

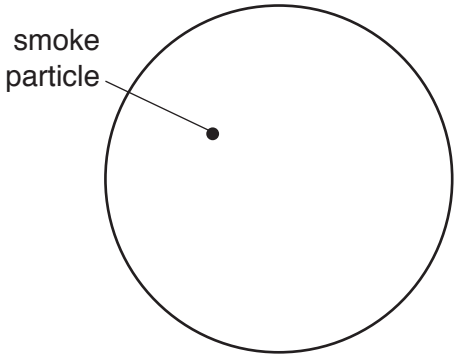

Fig. 5.1(b)

(i) On Fig. 5.1(b), draw a possible path for the smoke particle. [2]

(ii) Describe how air molecules cause the smoke particle to follow the observed path.

.....

.....

.....

.....[2]

(b) Fig. 5.2 shows a volume of gas in a cylinder.

View solution

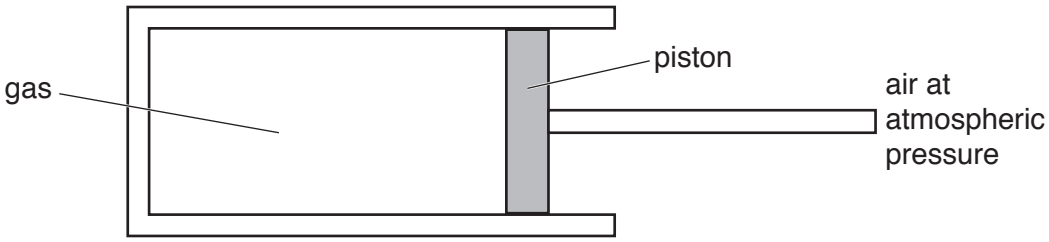

Fig. 5.2

The piston in the cylinder is free to move. The piston moves to the left when the temperature of the gas is decreased.

Explain, in terms of the molecules of the gas, why this happens.

.....

.....

.....

.....

.....[4]

[Total: 8]

© UCLES 2018

6 Sound is a longitudinal wave.

(a) Sketch a representation of a longitudinal wave. On your sketch

- indicate and label a distance to show the wavelength,
- mark and label the centre of one compression,
- mark and label the centre of one rarefaction.

View solution

[3]

(b) A longitudinal wave passes from one medium into another medium. The speed of the wave is slower in the second medium.

State what happens to

View solution

(i) the frequency of the wave,

.....[1]

(ii) the wavelength of the wave.

View solution

.....[1]

(c) State a typical value for the speed of sound in air.

.....[1]

[Total: 6]

View solution

7 **(a)** A ray of light travelling in air strikes a glass block at an angle of 30° to the normal. The light slows down as it enters the glass block.

View solution

State and explain, in terms of wavefronts, what happens to the light.

.....

.....

.....

.....[3]

(b) The speed of light in this block of glass is 1.9×10^8 m/s.

View solution

Calculate the refractive index of the glass.

refractive index = ...[2]

[Total: 5]

© UCLES 2018

8 **(a)** A thin converging lens is used to produce an image I of object O.

View solution

Fig. 8.1 shows O, I and the screen on which the image is produced.

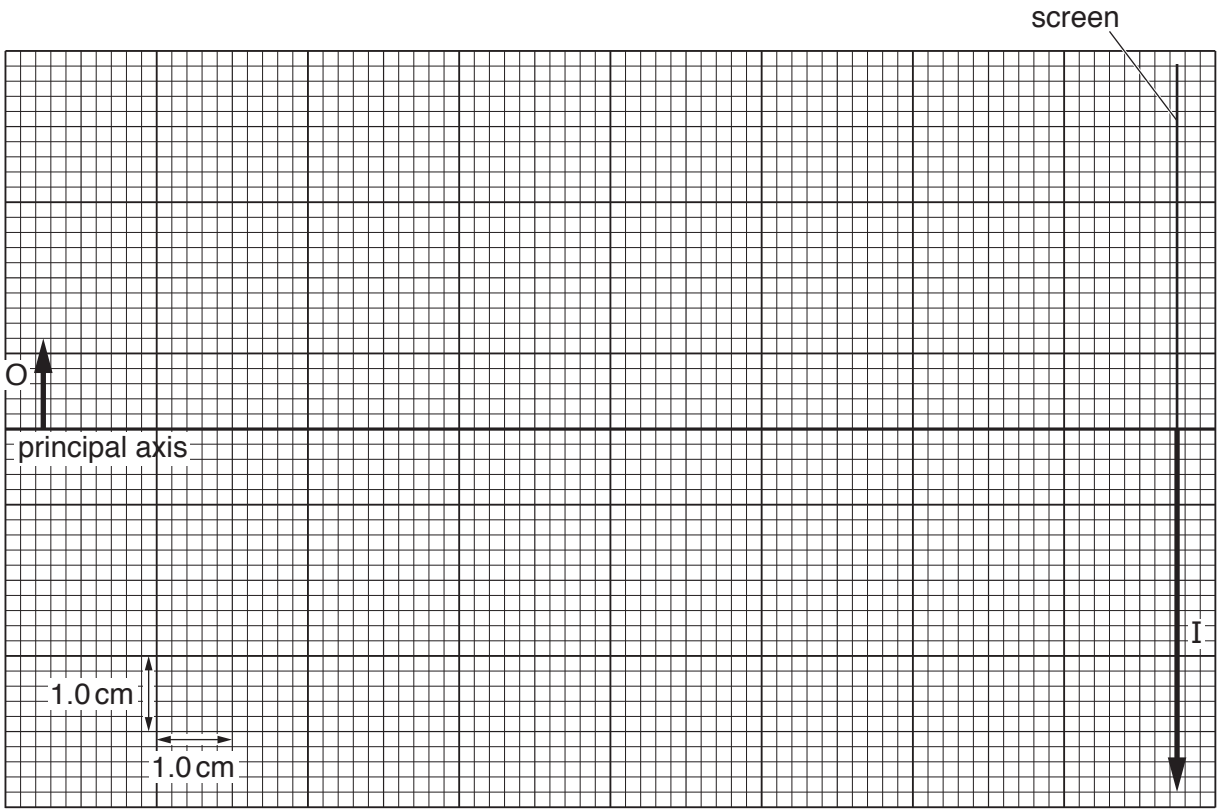

Fig. 8.1

(i) On Fig. 8.1, draw a straight line to represent a ray from the tip of the arrowhead of O to the tip of the arrowhead of I. Draw a vertical dotted line to indicate the position of the lens. This dotted line must extend above and below the principal axis. [2]

(ii) Draw a second ray from the tip of the object O to the tip of image I. This ray should pass through a principle focus. Label the principle focus, F. [1]

(iii) Determine the focal length of the lens.

focal length = ...[1]

(iv) Image I is further from the lens than object O is from the lens. Image I is described as enlarged and inverted.

State and explain one other characteristic of I.

.....

.....[1]

(b) Fig. 8.2 shows a spherical fishbowl, full of water, by a window. A black curtain hangs behind the fishbowl.

View solution

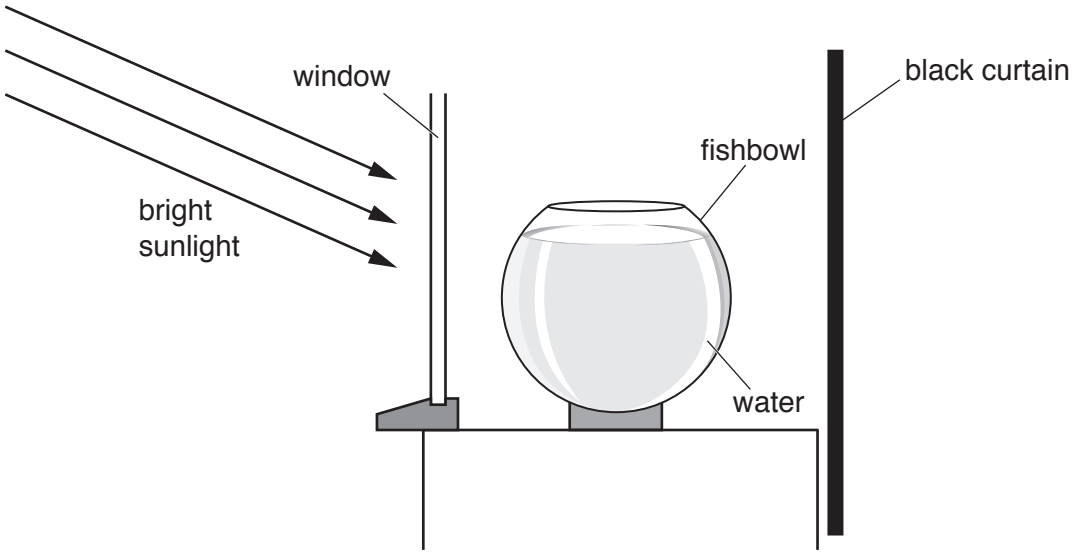

Fig. 8.2

When full of water, the fishbowl can act as a converging lens.

Suggest one possible hazard of leaving the fishbowl next to the window in bright sunlight.

.....

.....[1]

[Total: 6]

© UCLES 2018

9 Fig. 9.1 shows a circuit that includes a battery of electromotive force (e.m.f.) 12 V.

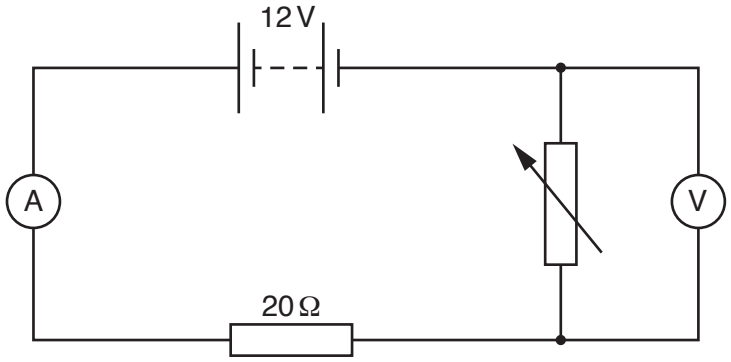

Fig. 9.1

The reading on the ammeter is 0.15 A.

(a) Calculate the resistance of the circuit.

View solution

resistance = ...[2]

(b) The variable resistor is adjusted so that its resistance decreases.

View solution

(i) State what happens to the reading on the ammeter.

.....[1]

(ii) State and explain what happens to the reading on the voltmeter.

View solution

.....

.....

.....[2]

(c) The battery is formed from cells of electromotive force (e.m.f.) 1.5 V.

View solution

(i) Explain, in terms of electrical energy, what is meant by an *electromotive force* (*e.m.f.*) *of 1.5 V*.

.....

.....[2]

(ii) State how many 1.5 V cells are connected in series to form the battery.

View solution

.....[1]

[Total: 8]

10 (a) A bar magnet is held with its N-pole just inside one end of a coil.

Fig. 10.1 shows the coil connected to a galvanometer that has the zero mark in the centre of the scale.

View solution

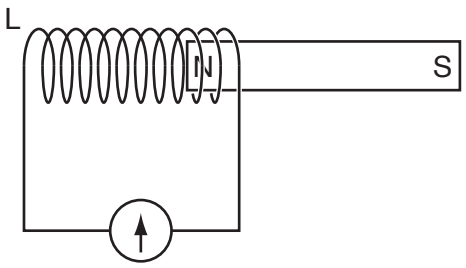

Fig. 10.1

The magnet is pulled horizontally to the right at a constant speed through a large distance.

(i) State what happens to the galvanometer reading as time passes.

.....

.....

.....[2]

(ii) As the magnet moves, an N-pole is produced at the left-hand end L of the coil.

View solution

Explain why the pole at L is an N-pole.

.....

.....

.....[2]

(b) A transformer has N_P turns on the primary coil and N_S turns on the secondary coil. The transformer is used in a school laboratory as a 12 V alternating current (a.c.) supply. The transformer is powered from the 240 V a.c. mains supply.

View solution

(i) Determine the turns ratio N_P / N_S of the transformer.

N_P / N_S = ...[2]

(ii) The laboratory 12 V a.c. supply is rectified to produce a direct current (d.c.) supply.

View solution

Underline the component that the rectification circuit must include.

AND gate **diode** **NOT gate** **potentiometer** **thermistor**

[1]

[Total: 7]

© UCLES 2018

11 **(a)** State the type of radioactive emission that causes

View solution

(i) the proton number of a nuclide to increase by 1,

.....[1]

(ii) the nucleon number of a nuclide to decrease by 4,

.....[1]

(iii) no change in the proton number and no change in the nucleon number of a nuclide.

.....[1]

(b) The isotope radon-220 is radioactive and it decays by α-particle emission.

View solution

(i) Fig. 11.1 shows a beam of α-particles entering the electric field between two charged plates.

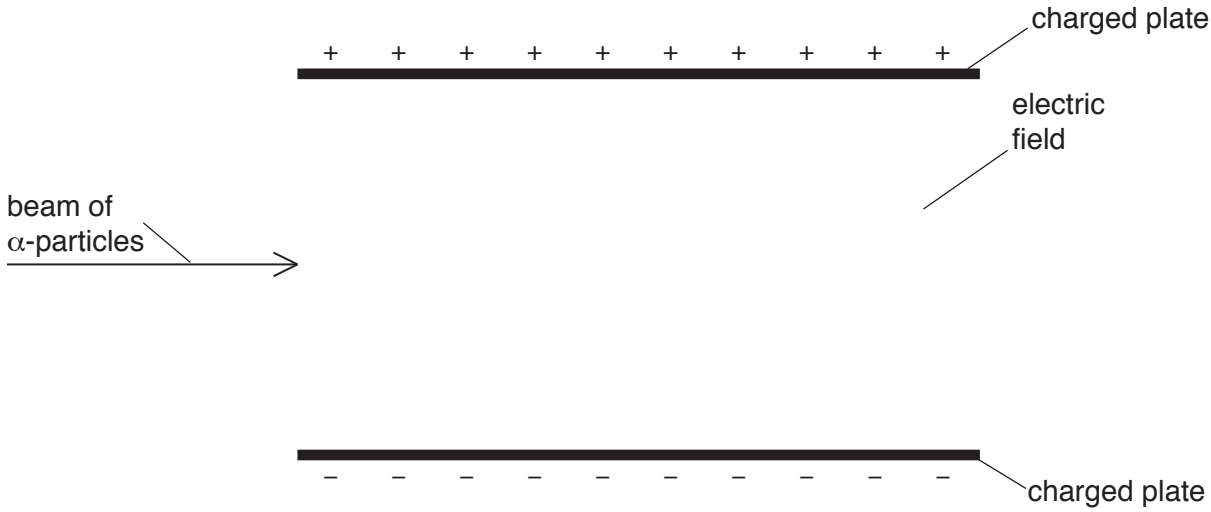

Fig. 11.1

On Fig. 11.1, sketch the path that the beam of α-particles follows in the electric field. [1]

(ii) The half-life of radon-220 is 56 s.

View solution

A sample of this isotope contains 7.2×10^6 atoms.

Predict the number of α-particles that the radon-220 in the sample emits in the next 168 s.

number of α-particles emitted = ...[3]

[Total: 7]

© UCLES 2018

BLANK PAGE

Permission to reproduce items where third-party owned material protected by copyright is included has been sought and cleared where possible. Every reasonable effort has been made by the publisher (UCLES) to trace copyright holders, but if any items requiring clearance have unwittingly been included, the publisher will be pleased to make amends at the earliest possible opportunity.

To avoid the issue of disclosure of answer-related information to candidates, all copyright acknowledgements are reproduced online in the Cambridge International Examinations Copyright Acknowledgements Booklet. This is produced for each series of examinations and is freely available to download at www.cie.org.uk after the live examination series.

Cambridge International Examinations is part of the Cambridge Assessment Group. Cambridge Assessment is the brand name of University of Cambridge Local Examinations Syndicate (UCLES), which is itself a department of the University of Cambridge.

© UCLES 2018