Cambridge IGCSE

Cambridge International Examinations
Cambridge International General Certificate of Secondary Education

CANDIDATE NAME									
CENTRE NUMBER						CANDIDATE NUMBER				

PHYSICS **0625/51**

Paper 5 Practical Test **May/June 2018**

1 hour 15 minutes

Candidates answer on the Question Paper.

Additional Materials: As listed in the Confidential Instructions

READ THESE INSTRUCTIONS FIRST

Write your Centre number, candidate number and name in the spaces at the top of the page.
Write in dark blue or black pen.
You may use an HB pencil for any diagrams or graphs.
Do not use staples, paper clips, glue or correction fluid.
DO **NOT** WRITE IN ANY BARCODES.

Answer **all** questions.
You are advised to spend about 20 minutes on each of questions 1 to 3, and 15 minutes on question 4.
Electronic calculators may be used.
You may lose marks if you do not show your working or if you do not use appropriate units.

At the end of the examination, fasten all your work securely together.
The number of marks is given in brackets [ ] at the end of each question or part question.

For Examiner's Use	
1	
2	
3	
4	
Total	

This syllabus is approved for use in England, Wales and Northern Ireland as a Cambridge International Level 1/Level 2 Certificate.

This document consists of **10** printed pages and **2** blank pages.

© UCLES 2018

CAMBRIDGE International Examinations

[Turn over]

1 In this experiment, you will determine the acceleration of free fall g using a pendulum. Carry out the following instructions, referring to Fig. 1.1 and Fig. 1.2.

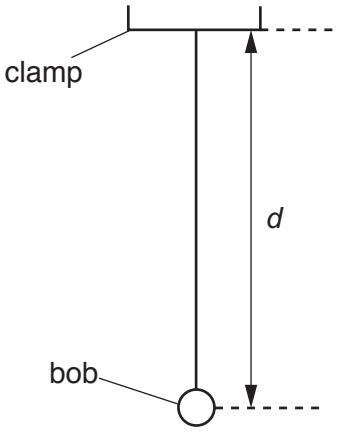

Fig. 1.1

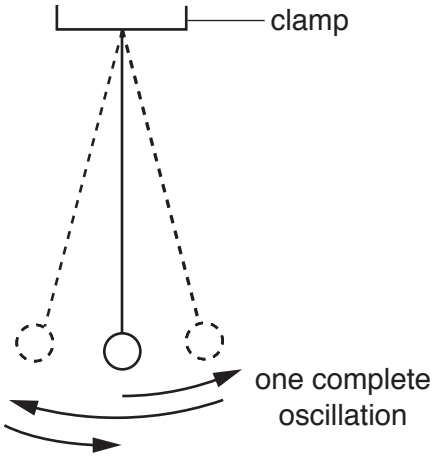

Fig. 1.2

A pendulum has been set up for you as shown in Fig. 1.1.

(a) Adjust the length of the pendulum until the distance d measured to the centre of the bob is 50.0 cm.

Displace the bob slightly and release it so that it swings. Fig. 1.2 shows one complete oscillation of the pendulum.

(i) Measure the time t for 10 complete oscillations.

View solution

t = ... [1]

(ii) Calculate the period T of the pendulum. The period is the time for one complete oscillation.

View solution

T = ... [1]

(iii) Calculate T^2.

View solution

T^2 = ... [2]

(iv) Calculate the acceleration of free fall g using the equation $g = \frac{20}{T^2}$.

View solution

g = ... [1]

© UCLES 2018

(b) Adjust the pendulum until the distance d measured to the centre of the bob is 100.0 cm.

View solution

(i) Repeat the procedure in **(a)(i)**, **(a)(ii)** and **(a)(iii)**.

t = ...

T = ...

T^2 = ...

[1]

(ii) Calculate the acceleration of free fall g using the equation $g = \frac{40}{T^2}$.

View solution

g = ...

[2]

(c) A student states that repeating the experiment improves the reliability of the value obtained for g.

Suggest **two** changes that you would make to improve the reliability. The stopwatch cannot be changed.

1. .....

.....

2. .....

.....

View solution [2]

(d) State **one** precaution that you took in this experiment in order to obtain accurate readings.

.....

.....[1]

[Total: 11]

View solution

2 In this experiment, you will investigate resistance.

The circuit shown in Fig. 2.1 has been set up for you.

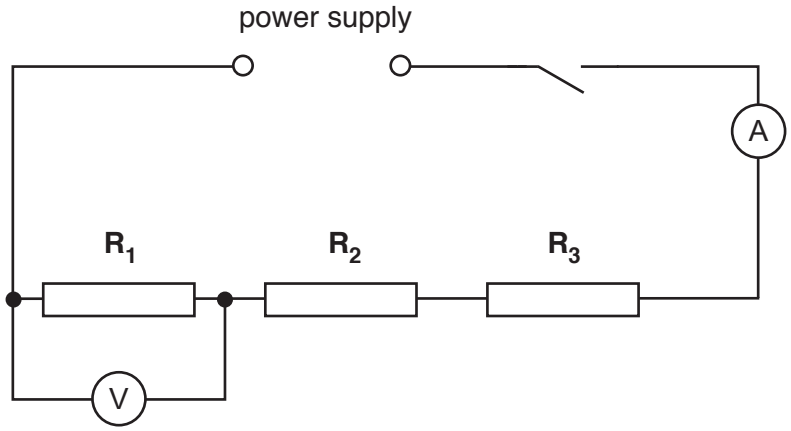

Fig. 2.1

View solution

(a) **(i)** Switch on. Measure and record the potential difference V_1 across the resistor $\mathbf{R_1}$ and the current I in the circuit. Switch off.

V_1 = ...

I = ...

[2]

(ii) Calculate the resistance of the resistor $\mathbf{R_1}$ using the equation $R_1 = \frac{V_1}{I}$.

View solution

R_1 = ... [1]

(b) Disconnect the voltmeter.

View solution

Connect the voltmeter across the resistor $\mathbf{R_2}$. Switch on.

(i) Measure and record the potential difference V_2 across the resistor $\mathbf{R_2}$. Switch off.

V_2 = ...

(ii) Calculate the resistance of the resistor $\mathbf{R_2}$ using the equation $R_2 = \frac{V_2}{I}$.

View solution

R_2 = ... [1]

© UCLES 2018

(c) Disconnect the voltmeter.

View solution

Connect the voltmeter across the resistor $\mathbf{R_3}$. Switch on.

(i) Measure and record the potential difference V_3 across the resistor $\mathbf{R_3}$. Switch off.

V_3 = ...

(ii) Calculate the resistance of the resistor $\mathbf{R_3}$ using the equation $R_3 = \frac{V_3}{I}$.

View solution

R_3 = ... [1]

(iii) Calculate the resistance R of resistors $\mathbf{R_1}$, $\mathbf{R_2}$ and $\mathbf{R_3}$ connected in series, using the equation $R = R_1 + R_2 + R_3$. Give your answer to a suitable number of significant figures for this experiment.

View solution

R = ... [1]

(d) State whether your results suggest that the three resistors have the same value of resistance. Justify your statement by reference to your results.

statement .....

justification .....

.....

.....

[2]

View solution

(e) Complete the circuit diagram in Fig. 2.2 to show:

View solution

- the three resistors connected in parallel
- the voltmeter connected to measure the potential difference across the resistors
- a variable resistor connected to control the current in all three resistors.

You are **not** required to set up this circuit.

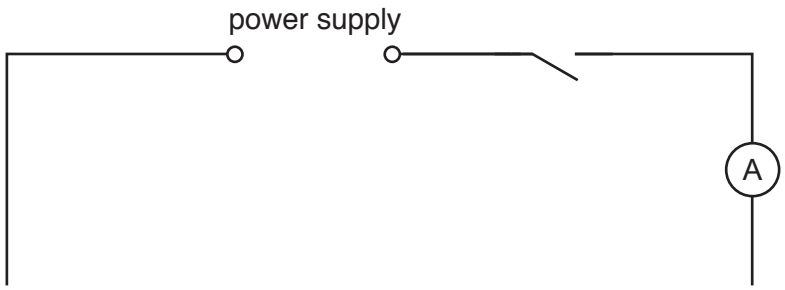

Fig. 2.2

[3]

[Total: 11]

© UCLES 2018

BLANK PAGE

3 In this experiment, you will determine the focal length *f* of a lens.

Carry out the following instructions referring to Fig. 3.1.

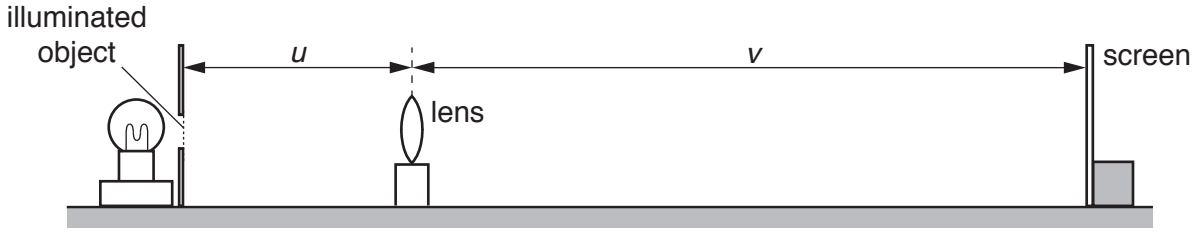

Fig. 3.1

(a) • Place the screen a distance $D = 70.0\,\text{cm}$ from the illuminated object.

View solution

- Place the lens between the object and the screen so that the lens is very close to the screen.
- Move the lens slowly away from the screen until a clearly focused image is formed on the screen.

(i) • Measure, and record in Table 3.1, the distance *u* between the centre of the lens and the illuminated object.

- Measure, and record in the table, the distance *v* between the centre of the lens and the screen.

(ii) Calculate the product *uv*. Record your answer in the table.

View solution

(iii) Repeat the procedure using values for *D* of 75.0 cm, 80.0 cm, 85.0 cm and 90.0 cm.

View solution

Table 3.1

D/cm	u/cm	v/cm	uv/cm^2
70.0			
75.0			
80.0			
85.0			
90.0			

[3]

© UCLES 2018

(b) Plot a graph of uv/cm^2 (y-axis) against D/cm (x-axis). You do **not** need to start your axes at the origin (0,0).

View solution

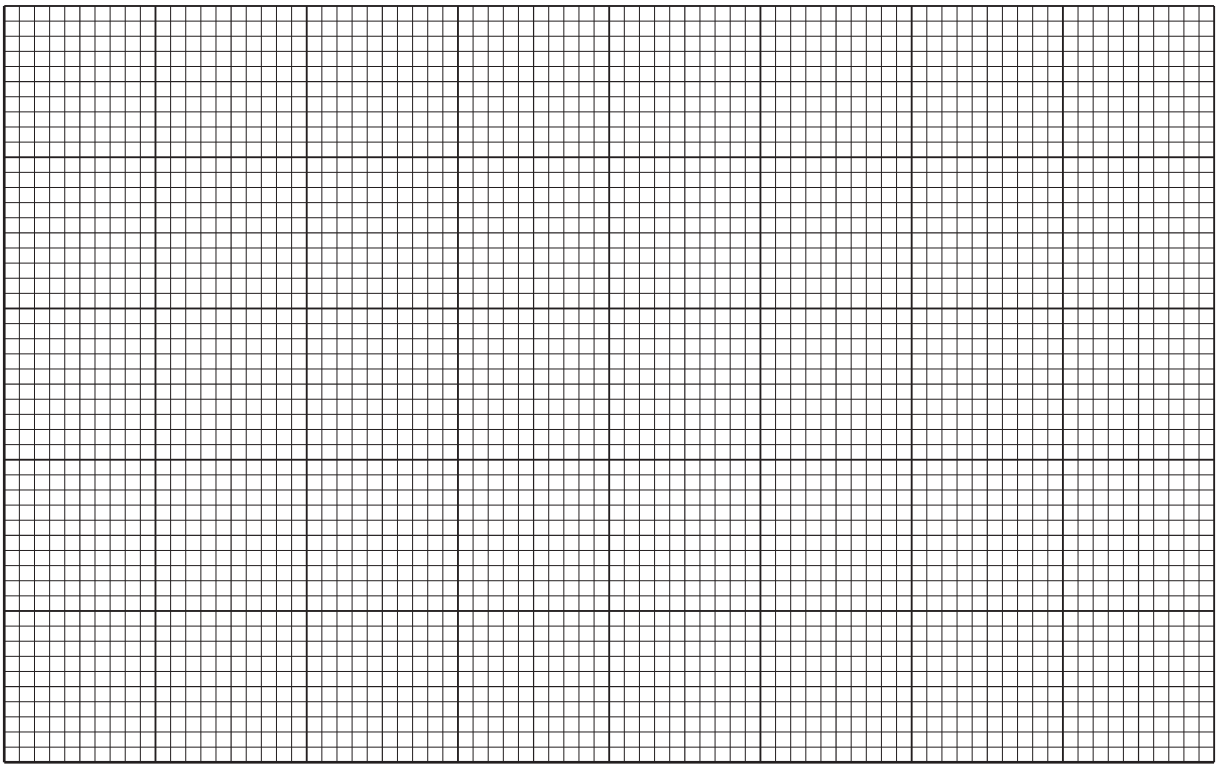

[4]

(c) The focal length f of the lens is numerically equal to the gradient of the line.

Determine the gradient G of the line. Show clearly on the graph how you obtained the necessary information.

View solution

G = ...[2]

(d) Suggest **two** difficulties in this experiment when trying to obtain accurate readings.

View solution

1. .....

.....

2. .....

.....

[2]

[Total: 11]

4 A student is investigating the effect of double-walled insulation on the rate of cooling of hot water in a copper container. The student places the copper container inside a larger metal container. He is investigating the effect of the size of the air gap between the copper container and larger metal containers.

Plan an experiment to investigate the effect of the size of the air gap between the copper container and larger metal containers on the rate of cooling of hot water.



The following apparatus is available:

a copper container
a number of metal containers of different diameters (all larger than the copper container)
a thermometer
a stopwatch
a measuring cylinder
a supply of hot water.

You can also use other apparatus and materials that are usually available in a school laboratory.

You are **not** required to carry out this investigation.

In your plan, you should:

- explain briefly how you would carry out the investigation
- state the key variables that you would control
- draw a table, or tables, with column headings, to show how you would display your readings (you are not required to enter any readings in the table)
- explain how you would use your readings to reach a conclusion.

You may draw a diagram if it helps your explanation.

.....

.....

© UCLES 2018

.....

.....

.....

.....

.....

.....

.....

.....

.....

.....

.....

.....

.....

.....

.....

.....[7]

[Total: 7]

BLANK PAGE

Permission to reproduce items where third-party owned material protected by copyright is included has been sought and cleared where possible. Every reasonable effort has been made by the publisher (UCLES) to trace copyright holders, but if any items requiring clearance have unwittingly been included, the publisher will be pleased to make amends at the earliest possible opportunity.

To avoid the issue of disclosure of answer-related information to candidates, all copyright acknowledgements are reproduced online in the Cambridge International Examinations Copyright Acknowledgements Booklet. This is produced for each series of examinations and is freely available to download at www.cie.org.uk after the live examination series.

Cambridge International Examinations is part of the Cambridge Assessment Group. Cambridge Assessment is the brand name of University of Cambridge Local Examinations Syndicate (UCLES), which is itself a department of the University of Cambridge.

© UCLES 2018