Cambridge IGCSE

**Cambridge International Examinations**
Cambridge International General Certificate of Secondary Education

| | | | | | | | | | |
|---|---|---|---|---|---|---|---|---|---|
| CANDIDATE NAME | | | | | | | | | |
| CENTRE NUMBER | | | | | | CANDIDATE NUMBER | | | | |

**PHYSICS** **0625/52**

Paper 5 Practical Test **May/June 2018**

**1 hour 15 minutes**

Candidates answer on the Question Paper.

Additional Materials: As listed in the Confidential Instructions.

**READ THESE INSTRUCTIONS FIRST**

Write your Centre number, candidate number and name in the spaces at the top of the page.
Write in dark blue or black pen.
You may use an HB pencil for any diagrams or graphs.
Do not use staples, paper clips, glue or correction fluid.
DO **NOT** WRITE IN ANY BARCODES.

Answer **all** questions.
You are advised to spend about 20 minutes on each of questions 1 to 3, and 15 minutes on question 4.
Electronic calculators may be used.
You may lose marks if you do not show your working or if you do not use appropriate units.

At the end of the examination, fasten all your work securely together.
The number of marks is given in brackets [ ] at the end of each question or part question.

| For Examiner's Use | |
|---|---|
| 1 | |
| 2 | |
| 3 | |
| 4 | |
| Total | |

This syllabus is approved for use in England, Wales and Northern Ireland as a Cambridge International Level 1/Level 2 Certificate.

This document consists of **10** printed pages and **2** blank pages.

© UCLES 2018

CAMBRIDGE International Examinations

[Turn over]

**1** In this experiment, you will determine the density of water.

Carry out the following instructions, referring to Fig. 1.1.

You are provided with a plastic drinks cup.

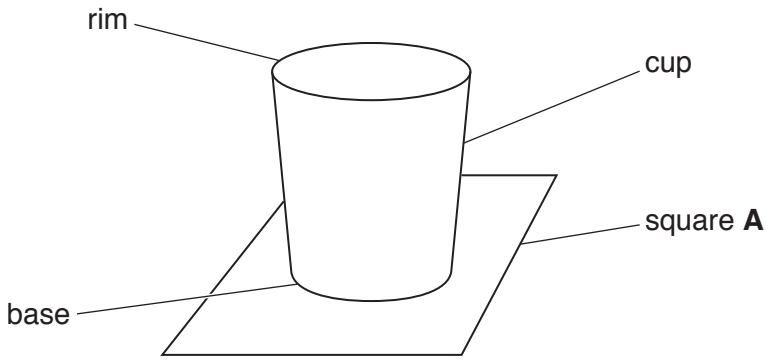


**Fig. 1.1**

**(a) (i)** Place the cup, with the base at the bottom, in square **A** on this page. Draw carefully around the base of the cup. Remove the cup from the paper. Take measurements from your drawing to determine an accurate value for the diameter $D_B$ of the base of the cup.

View solution

Square **A**

$D_B$ = ..... cm [2]

© UCLES 2018

**(ii)** Place the cup, with the rim at the bottom, in square **B** on this page. Draw carefully around the rim of the cup.

Remove the cup from the paper. Take measurements from your drawing to determine the diameter $D_T$ of the rim of the cup.

View solution

Square **B**

$D_T$ = ..... cm [1]

**(iii)** Calculate the average diameter $D$ of the cup using the equation $D = \frac{D_B + D_T}{2}$.

View solution

$D$ = ..... cm [1]

**(b) (i)** Measure the vertical height $h$ of the cup.

View solution

$h$ = ..... cm [1]

**(ii)** 1. Calculate the volume $V$ of the cup using the equation $V = 0.785\, D^2 h$.

View solution

$V$ = ..... $cm^3$

2. Calculate $V/2$.

$V/2$ = ..... $cm^3$ [1]

© UCLES 2018

**(c)** You are provided with water in beaker **W**.

View solution

Pour a volume $V/2$ of water into the measuring cylinder. Pour this water into the cup.

**(i)** Use the balance provided to measure the mass $m$ of the cup containing the water.

$m$ = ..... g [1]

**(ii)** Determine the density $\rho$ of water using the equation $\rho = \frac{2m}{V}$.

View solution

Give your answer to a suitable number of significant figures for this experiment. Include the unit.

$\rho$ = ..... [3]

**(d)** A student carries out all the instructions for this experiment with care, but his value for the density of water $\rho$ is not equal to the expected value.

Suggest, with a reason, a part of the procedure, **(a)**, **(b)** or **(c)** that could give an unreliable result.

View solution

part .....

reason .....

.....

[1]

[Total: 11]

© UCLES 2018

**BLANK PAGE**

**2** In this experiment, you will investigate the cooling of water.

Carry out the following instructions referring to Fig. 2.1.

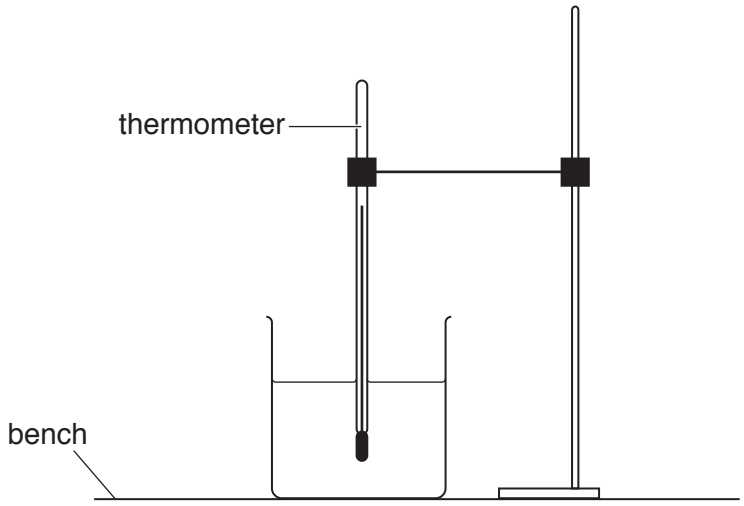


**Fig. 2.1**

View solution

**(a)** Use the thermometer to measure room temperature $\theta_R$.

$\theta_R$ = ..... [1]

**(b)** Pour 200 $cm^3$ of hot water into the beaker. Place the thermometer in the beaker of hot water.

- Record in Table 2.1 the temperature $\theta$ of the hot water at time $t$ = 0 s. Immediately start the stopclock.
- After 30 s, measure the temperature $\theta$ shown on the thermometer. Record the time $t$ = 30 s and the temperature reading in the table.
- Continue recording the time and temperature readings every 30 s until you have six sets of readings.

[2]

View solution

**Table 2.1**

| $t$/s | $\theta$/°C |
|---|---|
| 0 | |
| | |
| | |
| | |
| | |
| | |

**(c)** Plot a graph of $\theta$/°C *(y*-axis) against *t*/s (*x*-axis). You do **not** need to start the *y*-axis at the origin (0,0) but the value of room temperature $\theta_R$ must be marked on the *y*-axis.

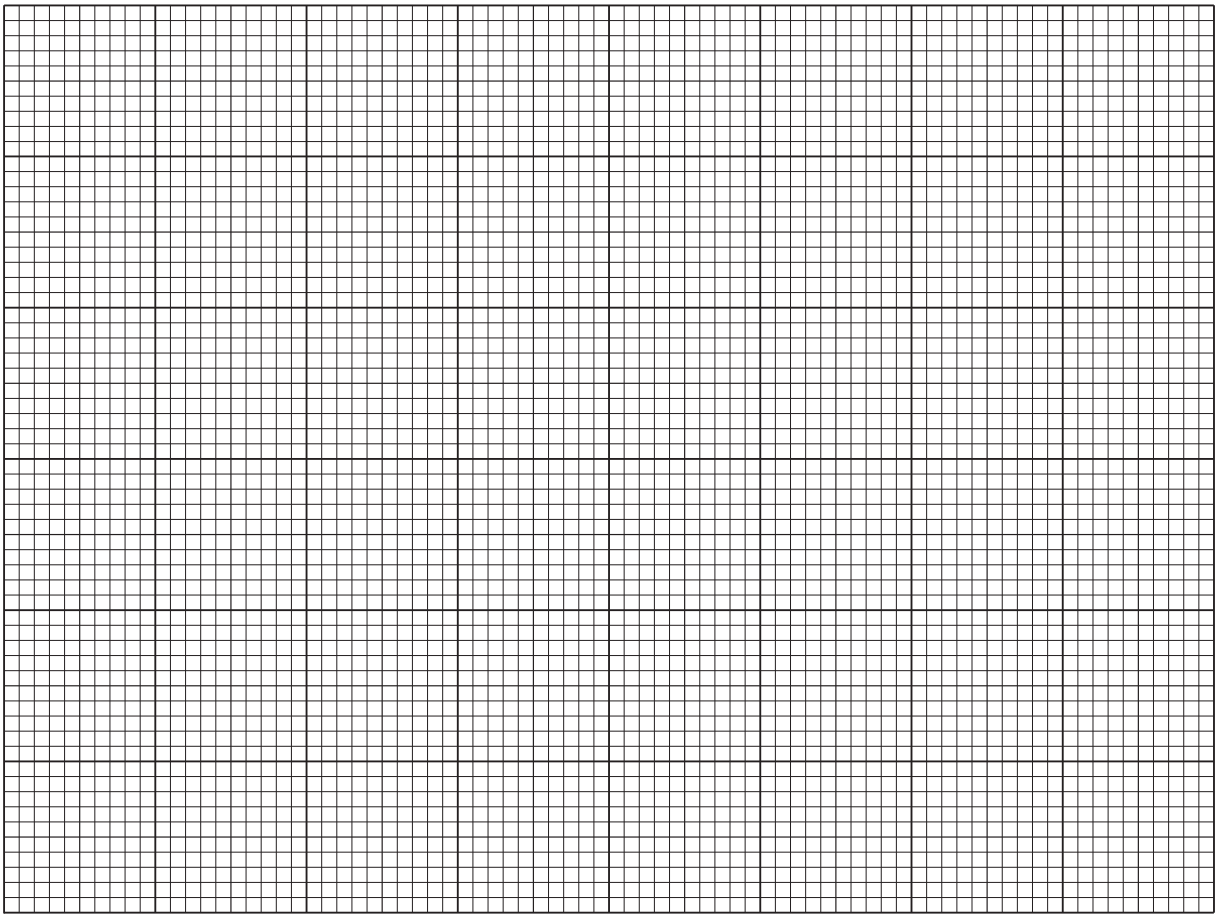

[4]

**(d)** Draw a horizontal line across the graph grid to show the value of room temperature $\theta_R$ during the experiment. [1]

**(e)** A student plans to repeat the experiment using the same thermometer and the same volume of water. Suggest **two** changes to the apparatus or the procedure that would increase the rate of cooling of the water.

1. .....

.....

2. .....

.....

[2]

**(f)** State **one** precaution that you took in order to record accurate readings.

View solution

.....

.....[1]

[Total: 11]

**3** In this experiment, you will determine the focal length $f$ of a lens.

Carry out the following instructions referring to Fig. 3.1.

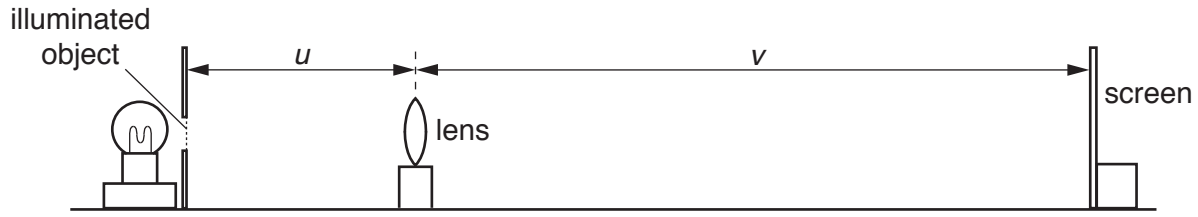


**Fig. 3.1**

**(a)** • Place the screen about 100 cm from the illuminated object.

View solution

- Place the lens between the object and the screen so that the centre of the lens is at a distance $u_1 = 20.0$ cm from the object.
- Adjust the position of the screen until a clearly focused image is formed on the screen.

**(i)** Measure the distance $v_1$ between the centre of the lens and the screen.

$v_1$ = ..... [1]

**(ii)** Calculate the focal length $f_1$ of the lens using the equation $f_1 = \dfrac{u_1 v_1}{(u_1 + v_1)}$.

View solution

$f_1$ = ..... [1]

**(b)** **(i)** Repeat the procedure in **(a)**, placing the lens between the object and the screen so that the centre of the lens is at a distance $u_2 = 30.0$ cm from the object.

View solution

$v_2$ = ..... [1]

**(ii)** Calculate the focal length $f_2$ of the lens using the equation $f_2 = \dfrac{u_2 v_2}{(u_2 + v_2)}$.

View solution

$f_2$ = ..... [2]

**(c)** Calculate the average value of the focal length $f$ of the lens, using the two results from parts **(a)** and **(b)**. Give your answer to a suitable number of significant figures for this experiment.

View solution

$f$ = ..... [2]

© UCLES 2018

**(d)** The student states that taking more measurements improves the reliability of the value obtained for *f*.

Suggest additional values for *u* that you would use.

View solution

.....

.....

.....[2]

**(e)** State **two** precautions that should be taken in this experiment to obtain accurate readings.

View solution

1. .....

.....

2. .....

.....

[2]

[Total: 11]

**4** A student is investigating whether the distance that a toy truck will travel along a horizontal floor, before stopping, depends on its mass.

View solution

The following apparatus is available to the student:

a ramp
blocks to support the ramp as shown in Fig. 4.1
toy truck
a selection of masses
other standard apparatus from the physics laboratory.

Plan an experiment to investigate whether the distance that the toy truck will travel along a horizontal floor, before stopping, depends on its mass.

You are **not** required to carry out this investigation.

In your plan, you should:

- explain briefly how you would carry out the investigation
- state any apparatus that you would use that is not included in the list above
- state the key variables that you would control
- draw a table, or tables, with column headings to show how you would display your readings (you are **not** required to enter any readings in the table).

You may add to the diagram in Fig. 4.1 to help your description.

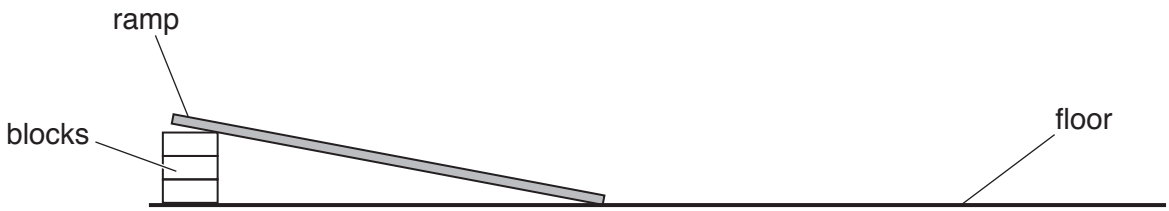


**Fig. 4.1**

© UCLES 2018

.....

.....

.....

.....

.....

.....

.....

.....

.....

.....

.....

.....

.....

.....

.....

.....[7]

[Total: 7]

**BLANK PAGE**

Permission to reproduce items where third-party owned material protected by copyright is included has been sought and cleared where possible. Every reasonable effort has been made by the publisher (UCLES) to trace copyright holders, but if any items requiring clearance have unwittingly been included, the publisher will be pleased to make amends at the earliest possible opportunity.

To avoid the issue of disclosure of answer-related information to candidates, all copyright acknowledgements are reproduced online in the Cambridge International Examinations Copyright Acknowledgements Booklet. This is produced for each series of examinations and is freely available to download at www.cie.org.uk after the live examination series.

Cambridge International Examinations is part of the Cambridge Assessment Group. Cambridge Assessment is the brand name of University of Cambridge Local Examinations Syndicate (UCLES), which is itself a department of the University of Cambridge.

© UCLES 2018