Cambridge IGCSE

Cambridge International Examinations
Cambridge International General Certificate of Secondary Education

CANDIDATE NAME									
CENTRE NUMBER						CANDIDATE NUMBER				

PHYSICS **0625/53**

Paper 5 Practical Test **May/June 2018**

1 hour 15 minutes

Candidates answer on the Question Paper.

Additional Materials: As listed in the Confidential Instructions.

READ THESE INSTRUCTIONS FIRST

Write your Centre number, candidate number and name in the spaces at the top of the page.
Write in dark blue or black pen.
You may use an HB pencil for any diagrams or graphs.
Do not use staples, paper clips, glue or correction fluid.
DO **NOT** WRITE IN ANY BARCODES.

Answer **all** questions.
You are advised to spend about 20 minutes on each of questions 1 to 3, and 15 minutes on question 4.
Electronic calculators may be used.
You may lose marks if you do not show your working or if you do not use appropriate units.

At the end of the examination, fasten all your work securely together.
The number of marks is given in brackets [ ] at the end of each question or part question.

For Examiner's Use	
1	
2	
3	
4	
Total	

This syllabus is approved for use in England, Wales and Northern Ireland as a Cambridge International Level 1/Level 2 Certificate.

This document consists of **10** printed pages and **2** blank pages.

© UCLES 2018

CAMBRIDGE International Examinations

—

1 In this experiment, you will investigate how partly covering the surface of the water in a beaker affects the rate at which the water cools.

Carry out the following instructions, referring to Fig. 1.1.

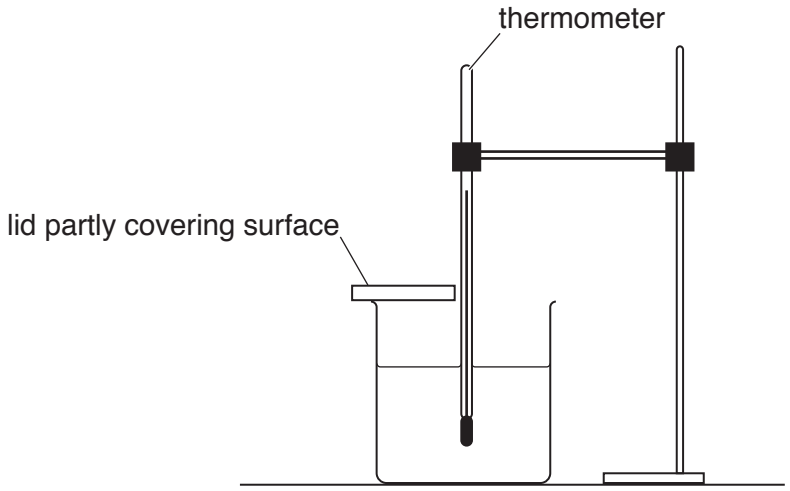

Fig. 1.1

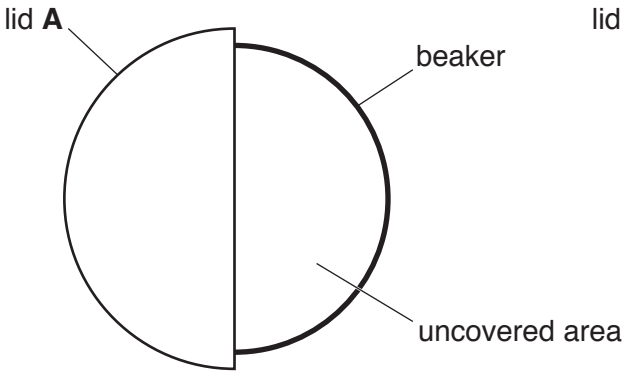

Fig. 1.2

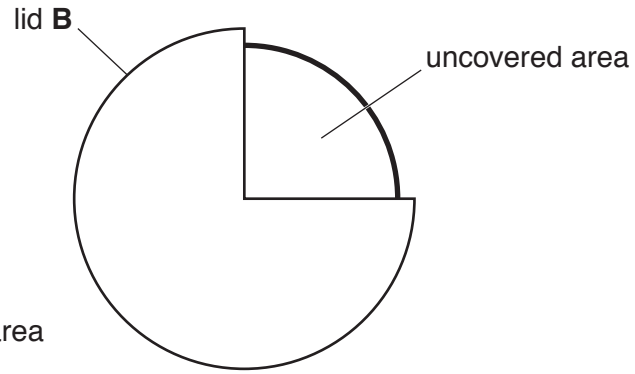

Fig. 1.3

(a) • Pour 100 cm^3 of hot water into the beaker and cover half of it with lid **A** as shown in Fig. 1.2. This leaves 50 % of the water surface uncovered.

• Place the thermometer into the hot water and record, in the first row of Table 1.1, the temperature θ of the water at time $t = 0$. Immediately start the stopclock.

• Record, in the table, the temperature θ of the water at times t = 30 s, 60 s, 90 s, 120 s, 150 s and 180 s.

• Pour the water out of the beaker.

View solution

[1]

(b) (i) Repeat **(a)**, using lid **B** instead of lid **A** to cover more of the beaker as shown in Fig. 1.3. This leaves only 25% of the water surface uncovered. [1]

(ii) Complete the headings and the time *t* column in the table. [2]

View solution

Table 1.1

	beaker with lid **A**	beaker with lid **B**
t/	θ /	θ /
0		

(c) (i) Write a conclusion to this experiment, stating for which lid the cooling rate is greater. Explain your answer by reference to your results.

View solution

.....

.....

.....

.....[2]

(ii) Suggest a change to the **apparatus** that could produce a greater difference between the rates of cooling for lid **A** and lid **B**.
Explain why the change might produce a greater difference.

View solution

change .....

.....

explanation .....

.....

[2]

(d) A student thinks that the cooling rate is directly proportional to the percentage of the surface area uncovered. He wants to draw a graph of cooling rate against the percentage of uncovered area to investigate this.

Describe how his graph line will show whether the cooling rate and the percentage of surface area uncovered are directly proportional.

.....

.....[2]

(e) Students in other countries are carrying out the same experiment.

View solution

Suggest a factor that they should keep the same if they are to obtain similar readings.

.....

.....[1]

[Total: 11]

2 In this experiment, you will investigate a circuit containing resistors.

The circuit has been set up for you.
The fixed resistor must remain connected throughout the experiment.
Resistor **X** has a resistance $R = 1\,\Omega$.

Carry out the following instructions, referring to Fig. 2.1.

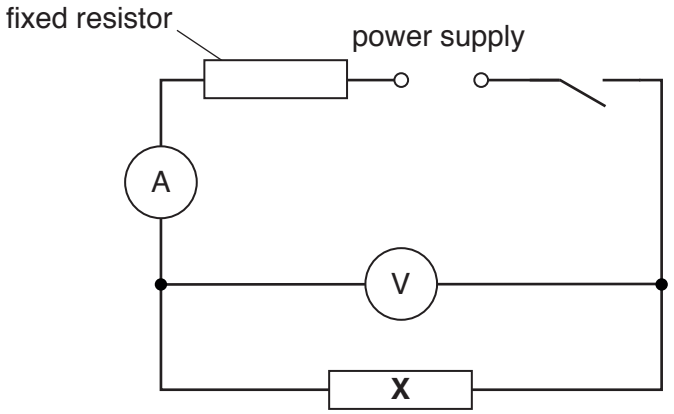

Fig. 2.1

(a) • Switch on.
Measure, and record in Table 2.1, the value of the current I in the circuit and the value of the potential difference V across resistor **X**.
Switch off.

View solution

• Replace resistor **X** with resistor **Y** of value $R = 3\,\Omega$.
Repeat the above procedure.

• Replace resistor **Y** with resistor **Z** of value $R = 10\,\Omega$.
Repeat the above procedure.

[3]

Table 2.1

Resistor	R/Ω	$I/$	$V/$
X	1		
Y	3		
Z	10		

(b) Add appropriate units to the column headings in the table. [1]

View solution

(c) Calculate the power P supplied to each of the resistors **X**, **Y** and **Z**.
Use your readings from **(a)** and the equation $P = I \times V$.
Give your answers to a suitable number of significant figures.

View solution

Power P supplied to resistor **X** = ... W

Power P supplied to resistor **Y** = ... W

Power P supplied to resistor **Z** = ... W
[3]

(d) Describe how the value of the power P changes as R increases.

View solution

.....

.....

.....[2]

(e) A student wishes to investigate the relationship between P and R in more detail.
Suggest **two** modifications to the procedure that will enable him to do this.

View solution

1. .....

.....

2. .....

.....
[2]

[Total: 11]

BLANK PAGE

3 In this experiment, you will investigate the image produced by a converging lens.

Carry out the following instructions, referring to Fig. 3.1.

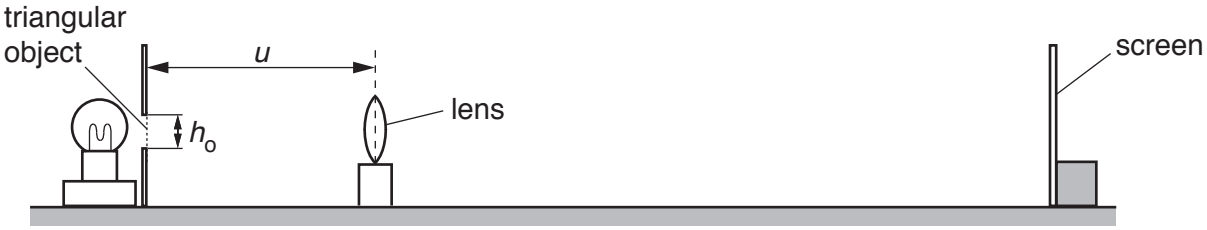

Fig. 3.1

(a) • Measure and record the height h_o of the triangular object.

View solution

h_o = ... cm

- Switch on the lamp.
- Set the distance between the triangular object and the lens, u, to 30.0 cm. Move the screen until a clear focused image of the triangular object is seen. Measure, and record in Table 3.1, the height h_I of the image.
- Repeat the procedure for u values of 35.0 cm, 40.0 cm, 45.0 cm and 50.0 cm.
- Switch off the lamp.

Table 3.1

u/cm	h_I/cm	N
30.0		
35.0		
40.0		
45.0		
50.0		

[2]

(b) For each distance u, calculate, and record in the table, a value N using your results from **(a)** and the equation $N = \frac{h_o}{h_I}$. [1]

View solution

(c) Plot a graph of u/cm (y-axis) against N (x-axis). You do not need to start your axes at the origin (0,0).

View solution

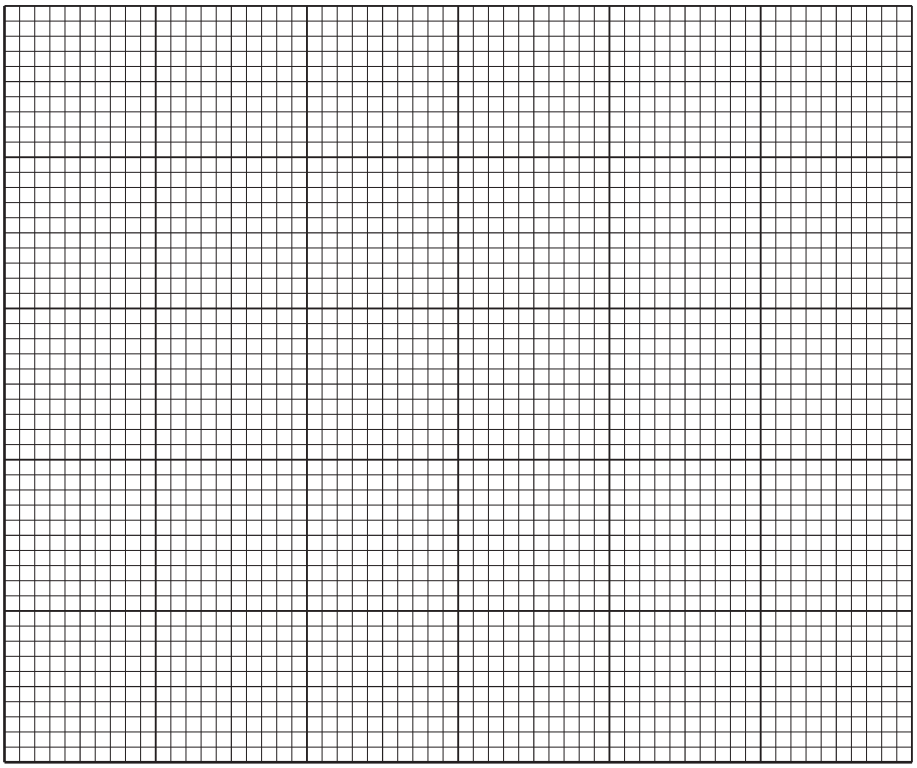

[4]

(d) Determine the gradient G of the graph.
Show clearly on the graph how you obtained the necessary information.

View solution

G = ...[2]

(e) Describe **one** difficulty that might be experienced when measuring the height of the image h_I.
Suggest an improvement to the apparatus to overcome this difficulty.

difficulty .....

.....

improvement .....

.....
[2]

[Total: 11]

View solution

4 A student is investigating the force needed to **just** slide a block across a surface.

Plan an experiment which will enable him to investigate how the force needed varies with the mass of the block.

View solution

The apparatus available includes:

a light, flat wooden block fitted with a hook as shown in Fig. 4.1

a pulley which can be clamped to a bench.

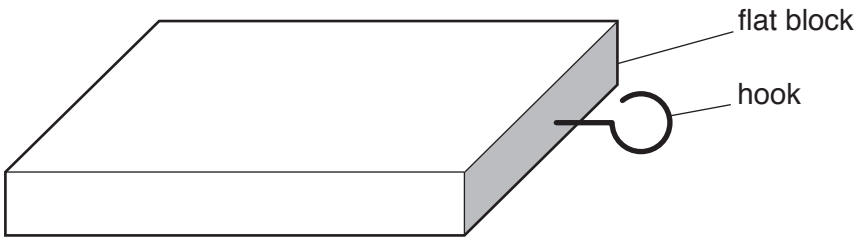

Fig. 4.1

In your plan, you should:

- list any additional apparatus needed
- draw a clearly labelled diagram of how the apparatus will be arranged
- give brief instructions for carrying out the experiment
- describe any precautions which should be taken to ensure reliable results
- suggest a graph which could be drawn.

You are **not** required to carry out the experiment.

© UCLES 2018

.....

.....

.....

BLANK PAGE

Permission to reproduce items where third-party owned material protected by copyright is included has been sought and cleared where possible. Every reasonable effort has been made by the publisher (UCLES) to trace copyright holders, but if any items requiring clearance have unwittingly been included, the publisher will be pleased to make amends at the earliest possible opportunity.

To avoid the issue of disclosure of answer-related information to candidates, all copyright acknowledgements are reproduced online in the Cambridge International Examinations Copyright Acknowledgements Booklet. This is produced for each series of examinations and is freely available to download at www.cie.org.uk after the live examination series.

Cambridge International Examinations is part of the Cambridge Assessment Group. Cambridge Assessment is the brand name of University of Cambridge Local Examinations Syndicate (UCLES), which is itself a department of the University of Cambridge.

© UCLES 2018