Cambridge IGCSE

Cambridge International Examinations
Cambridge International General Certificate of Secondary Education

CANDIDATE NAME									
CENTRE NUMBER						CANDIDATE NUMBER				

PHYSICS **0625/61**

Paper 6 Alternative to Practical **May/June 2018**

1 hour

Candidates answer on the Question Paper.

No Additional Materials are required.

READ THESE INSTRUCTIONS FIRST

Write your Centre number, candidate number and name on all the work you hand in.
Write in dark blue or black pen.
You may use an HB pencil for any diagrams or graphs.
Do not use staples, paper clips, glue or correction fluid.
DO **NOT** WRITE IN ANY BARCODES.

Answer **all** questions.
Electronic calculators may be used.
You may lose marks if you do not show your working or if you do not use appropriate units.

At the end of the examination, fasten all your work securely together.
The number of marks is given in brackets [ ] at the end of each question or part question.

This syllabus is approved for use in England, Wales and Northern Ireland as a Cambridge International Level 1/Level 2 Certificate.

© UCLES 2018

1 A student is determining the acceleration of free fall g using a pendulum. Fig. 1.1 shows the pendulum. Fig. 1.2 shows one complete oscillation of the pendulum.

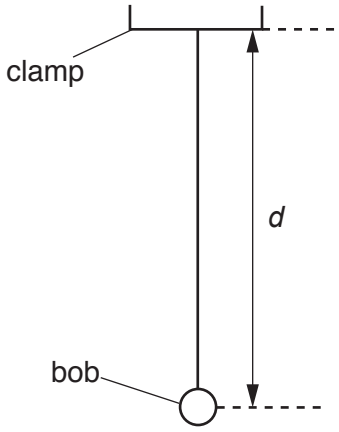

Fig. 1.1

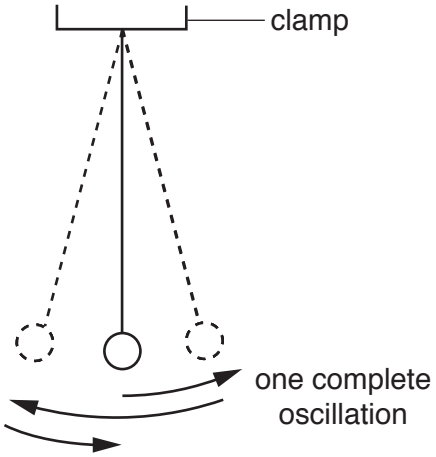

Fig. 1.2

(a) On Fig. 1.1, measure the distance d.

View solution

d = ... cm [1]

(b) Fig. 1.1 is drawn 1/10th actual size.

View solution

(i) Calculate the actual distance D from the bottom of the clamp to the centre of the bob.

D = ... cm [1]

The student displaces the bob slightly and releases it so that it swings. He measures the time t for 10 complete oscillations. The time t is shown on the stopwatch in Fig. 1.3.



Fig. 1.3

(ii) Write down the time t shown in Fig. 1.3.

View solution

t = ... [1]

(iii) Calculate the period T of the pendulum. The period is the time for one complete oscillation.

View solution

T = ... [1]

© UCLES 2018

(iv) Calculate T^2.

View solution

T^2 = ... [1]

(v) Calculate the acceleration of free fall g using the equation $g = \frac{20}{T^2}$.

View solution

g = ... [1]

(c) The student adjusts the pendulum until the distance D measured to the centre of the bob is 100.0 cm.

He repeats the procedure and obtains another value of T^2.

View solution

T^2 = 3.94

(i) On the dotted line above, write the unit for T^2. [1]

(ii) Calculate the acceleration of free fall g using the equation $g = \frac{40}{T^2}$ and the value of T^2 from **(c)**. Give your answer to a suitable number of significant figures for this experiment.

View solution

g = ... [1]

(d) Another student states that repeating the experiment improves the reliability of the value obtained for g.

Suggest **two** changes that you would make to improve the reliability. The stopwatch cannot be changed.

1. .....

.....

2. .....

.....

[2]

(e) State **one** precaution that you would take in this experiment in order to obtain accurate readings.

.....

..... [1]

[Total: 11]

View solution

© UCLES 2018

2 A student is investigating resistance.

She uses the circuit shown in Fig. 2.1.

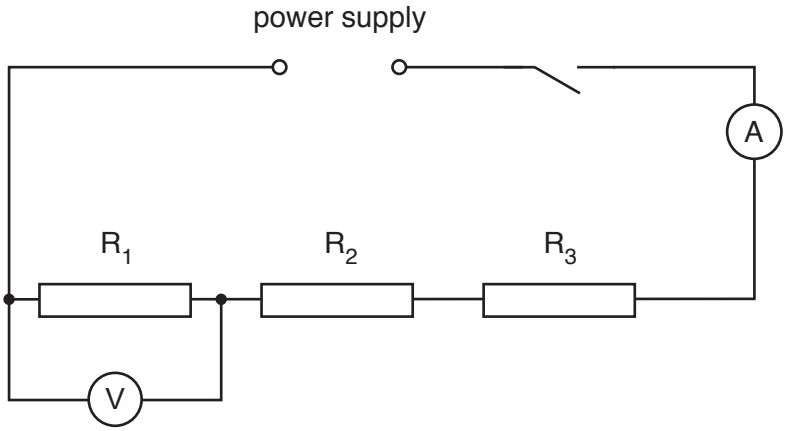

Fig. 2.1

(a) She measures the potential difference V_1 across the resistor R_1 and the current I in the circuit.

View solution

Figs. 2.2 and 2.3 show the voltmeter and ammeter readings.

(i) Write down the readings shown on the meters in Figs. 2.2 and 2.3.

V_1 = ...

I = ...

[2]

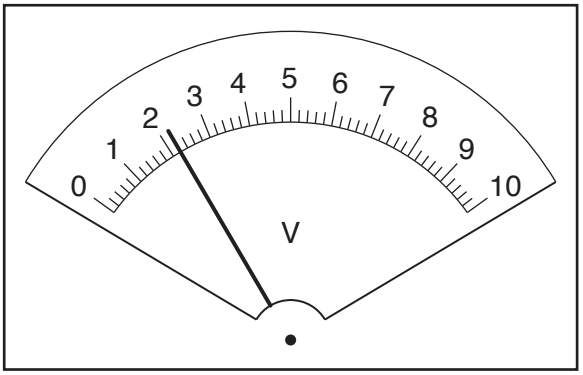

Fig. 2.2

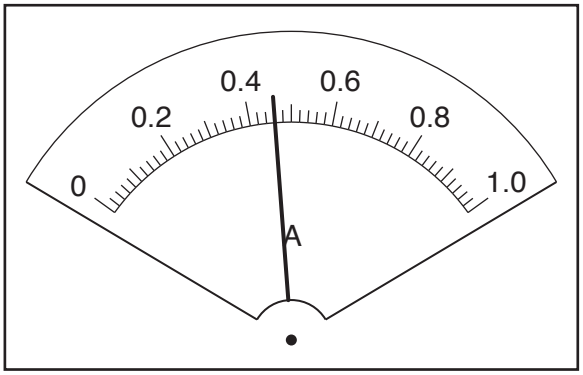

Fig. 2.3

(ii) Calculate the resistance of the resistor R_1 using the equation $R_1 = \frac{V_1}{I}$.

View solution

R_1 = ... [1]

(b) The student measures the potential difference across each resistor in turn. She calculates values for the resistance R_2 and R_3 of the resistor R_2 and of the resistor R_3. She records her values as:

View solution

R_2 = 4.75 Ω

R_3 = 4.81 Ω

State whether the results suggest that the three resistors have the same value of resistance. Justify your statement by reference to the results.

statement .....

justification .....

.....

.....

[2]

(c) Calculate the combined resistance R of resistors R_1, R_2 and R_3 connected in series, using the equation $R = R_1 + R_2 + R_3$. Give your answer to a suitable number of significant figures for this experiment.

View solution

R = ... [2]

(d) The student checks her result by connecting the voltmeter across all three resistors connected in series. Tick the potential difference reading you would expect to be closest to the reading she obtains.

View solution

- ☐ $\frac{V_1}{3}$
- ☐ V_1
- ☐ $3V_1$

[1]

(e) Complete the circuit diagram in Fig. 2.4 to show

View solution

- the three resistors connected in parallel
- the voltmeter connected to measure the potential difference across the resistors
- a variable resistor connected to control the current in all three resistors.

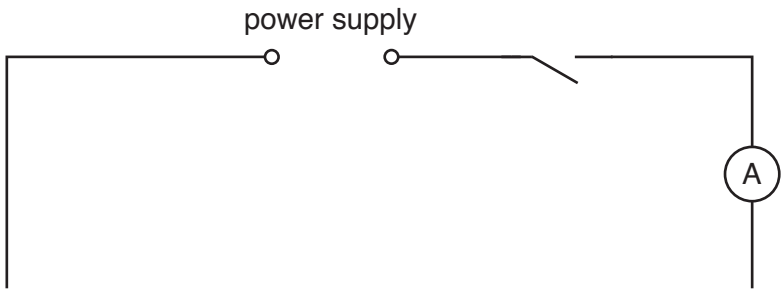

Fig. 2.4

[3]

[Total: 11]

© UCLES 2018

Question 3 starts on the next page.

3 A student is determining the focal length *f* of a lens.

Fig. 3.1 shows the apparatus.

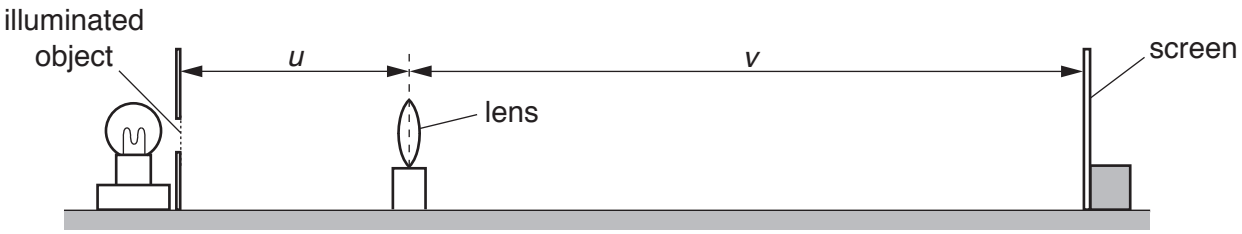

Fig. 3.1

(a) The student places the screen a distance $D = 70.0\,\text{cm}$ from the illuminated object.

He places the lens close to the screen and moves the lens slowly away from the screen until a clearly focused image is formed on the screen.

He measures the distance *u* between the centre of the lens and the illuminated object.

He measures the distance *v* between the centre of the lens and the screen.

He repeats the procedure using values for *D* of 75.0 cm, 80.0 cm, 85.0 cm and 90.0 cm.

The readings are shown in Table 3.1.

Calculate, and record in Table 3.1, *uv* for each value of *D*.

Table 3.1

D/cm	*u*/cm	*v*/cm	*uv*/cm^2
70.0	22.0	48.4	
75.0	20.7	54.5	
80.0	20.0	60.0	
85.0	19.5	65.8	
90.0	19.0	71.2	

[1]

(b) Plot a graph of uv/cm^2 (y-axis) against D/cm (x-axis). You do **not** need to start your axes at the origin (0,0).

View solution

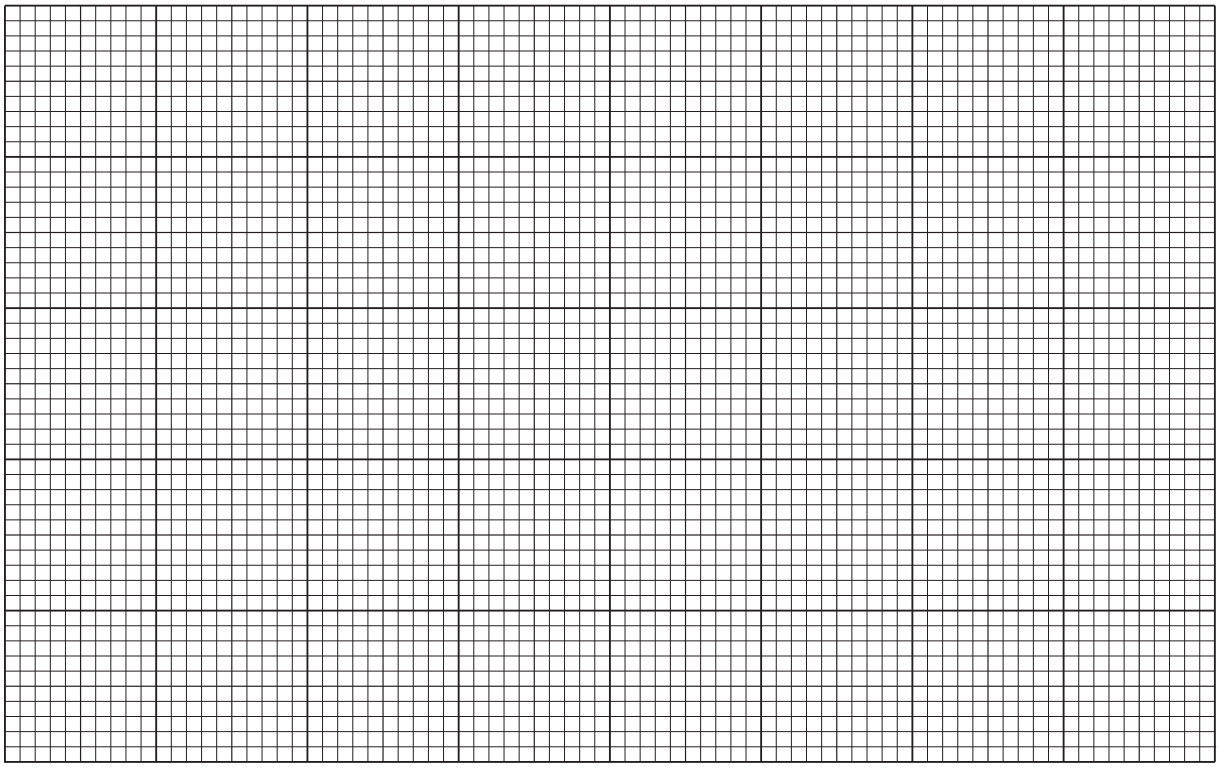

[4]

(c) Determine the gradient G of the line. Show clearly on the graph how you obtained the necessary information.

View solution

$G =$ ..... [2]

(d) The focal length f of the lens is numerically equal to the gradient G of the graph. Write down a value for the focal length f of the lens. Give your answer to a suitable number of significant figures for this experiment.

View solution

$f =$ ..... [2]

(e) Suggest **two** difficulties in this experiment when trying to obtain accurate readings.

View solution

1. .....

.....

2. .....

.....

[2]

[Total: 11]

4 A student is investigating the effect of double-walled insulation on the rate of cooling of hot water in a copper container. The student places the copper container inside a larger metal container. He is investigating the effect of the size of the air gap between the copper container and larger metal containers.

Plan an experiment to investigate the effect of the size of the air gap between the copper container and larger metal containers on the rate of cooling of hot water.



The following apparatus is available:

a copper container
a number of metal containers of different diameters (all larger than the copper container)
a thermometer
a stopwatch
a measuring cylinder
a supply of hot water.

You can also use other apparatus and materials that are usually available in a school laboratory.

In your plan, you should:

- explain briefly how you would carry out the investigation
- state the key variables that you would control
- draw a table, or tables, with column headings, to show how you would display your readings (you are not required to enter any readings in the table)
- explain how you would use your readings to reach a conclusion.

You may draw a diagram if it helps your explanation.

.....

.....

.....

© UCLES 2018

.....

.....

.....

.....

.....

.....

.....

.....

.....

.....

.....

.....

.....

.....

.....[7]

[Total: 7]

BLANK PAGE

Permission to reproduce items where third-party owned material protected by copyright is included has been sought and cleared where possible. Every reasonable effort has been made by the publisher (UCLES) to trace copyright holders, but if any items requiring clearance have unwittingly been included, the publisher will be pleased to make amends at the earliest possible opportunity.

To avoid the issue of disclosure of answer-related information to candidates, all copyright acknowledgements are reproduced online in the Cambridge International Examinations Copyright Acknowledgements Booklet. This is produced for each series of examinations and is freely available to download at www.cie.org.uk after the live examination series.

Cambridge International Examinations is part of the Cambridge Assessment Group. Cambridge Assessment is the brand name of University of Cambridge Local Examinations Syndicate (UCLES), which is itself a department of the University of Cambridge.

© UCLES 2018