Cambridge IGCSE

Cambridge International Examinations
Cambridge International General Certificate of Secondary Education

CANDIDATE NAME									
CENTRE NUMBER						CANDIDATE NUMBER			

PHYSICS **0625/63**

Paper 6 Alternative to Practical **May/June 2018**

1 hour

Candidates answer on the Question Paper.

No Additional Materials are required.

READ THESE INSTRUCTIONS FIRST

Write your Centre number, candidate number and name on all the work you hand in.
Write in dark blue or black pen.
You may use an HB pencil for any diagrams or graphs.
Do not use staples, paper clips, glue or correction fluid.
DO **NOT** WRITE IN ANY BARCODES.

Answer **all** questions.
Electronic calculators may be used.
You may lose marks if you do not show your working or if you do not use appropriate units.

At the end of the examination, fasten all your work securely together.
The number of marks is given in brackets [ ] at the end of each question or part question.

This syllabus is approved for use in England, Wales and Northern Ireland as a Cambridge International Level 1/Level 2 Certificate.

© UCLES 2018

1 A student is investigating how partly covering the surface of the water in a beaker affects the rate at which the water cools.

The apparatus used is shown in Fig. 1.1.

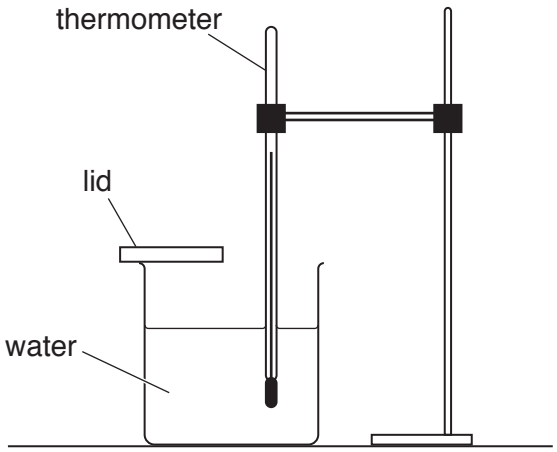

Fig. 1.1

(a)

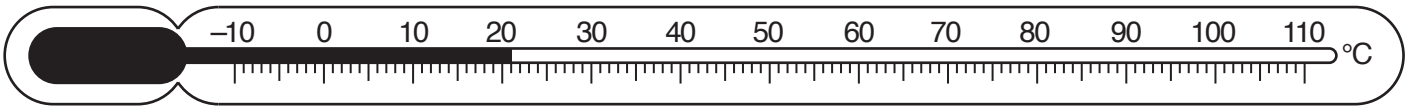

Fig. 1.2

View solution

Record the room temperature θ_R, shown on the thermometer in Fig. 1.2.

θ_R = ... [1]

(b) The student pours 100 cm^3 of hot water into a beaker. She places lid **A** on the beaker. This leaves half of the water surface uncovered, as shown in Fig. 1.3.
She records the temperature of the water in the beaker and immediately starts a stopclock.
She records the temperature θ of the water every 30 s. Her readings are shown in Table 1.1.
She repeats the procedure using lid **B**. This leaves a quarter of the water surface uncovered, as shown in Fig. 1.4.

View solution

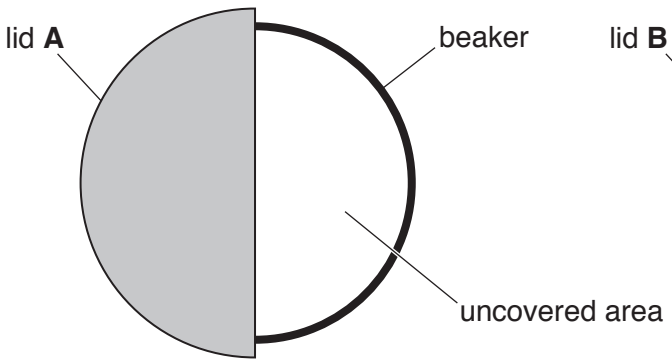

Fig. 1.3

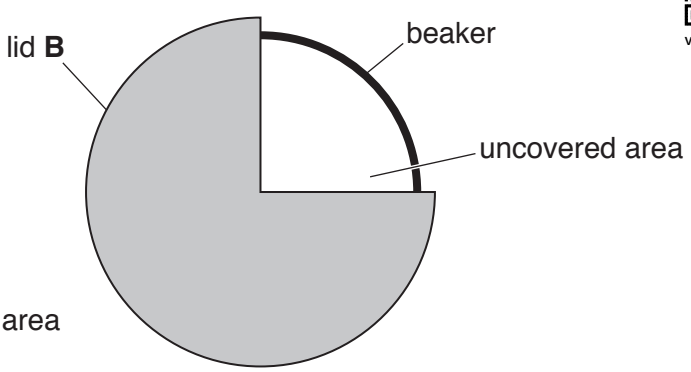

Fig. 1.4

© UCLES 2018

Complete the headings and the time *t* column in Table 1.1. [2]

Table 1.1

	beaker with lid **A**	beaker with lid **B**
t /	θ /	θ /
0	80.0	81.0
	77.0	79.0
	74.5	77.5
	72.5	76.0
	70.5	75.0
	69.0	74.0
	68.0	73.5

(c) Describe a precaution that should be taken to ensure that the temperature readings are as accurate as possible in the experiment.

.....

..... [1]

(d) **(i)** Write a conclusion to this experiment, stating for which lid the rate of cooling is greater. Explain your answer by reference to the results.

.....

.....

.....

..... [2]

(ii) Suggest a change to the **apparatus** that could produce a greater difference between the rates of cooling for lid **A** and lid **B**.

Explain why the change might produce a greater difference.

View solution

change .....

.....

explanation .....

.....

[2]

(e) A student suggests that the rate of cooling is directly proportional to the percentage of the uncovered surface area. He wants to draw a graph of cooling rate against the percentage of uncovered area to investigate this.

Describe how his graph line will show whether the rate of cooling and the percentage of uncovered surface area are directly proportional.

.....

..... [2]

(f) Students in other countries carry out the same experiment.

View solution

Suggest **one** factor that they should keep the same if they are to obtain similar readings.

.....

..... [1]

[Total: 11]

© UCLES 2018

BLANK PAGE

2 A student is investigating a circuit containing resistors.

He is using the circuit shown in Fig. 2.1.
Resistor **X** has a resistance $R = 1\,\Omega$.

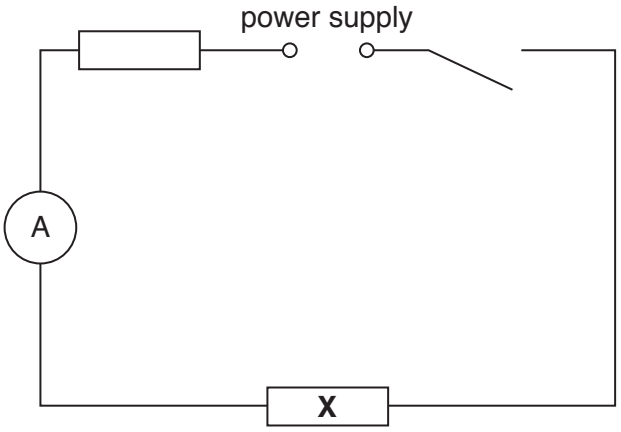

Fig. 2.1

View solution

(a) On Fig. 2.1, draw a voltmeter connected so that it measures the potential difference (p.d.) across resistor **X**. [1]

(b) The student uses the ammeter to measure the current in the circuit and uses the voltmeter to measure the potential difference (p.d.) across resistor **X**. The readings are shown in Fig. 2.2 and Fig. 2.3.

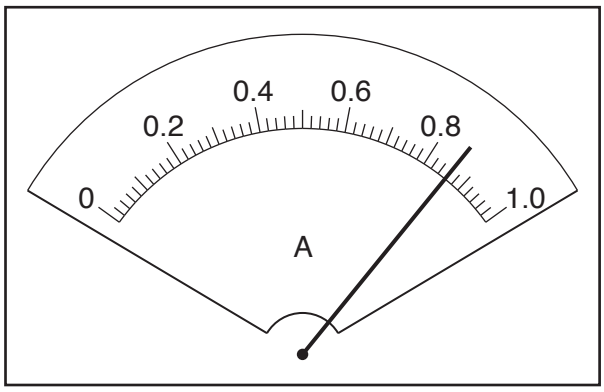

Fig. 2.2

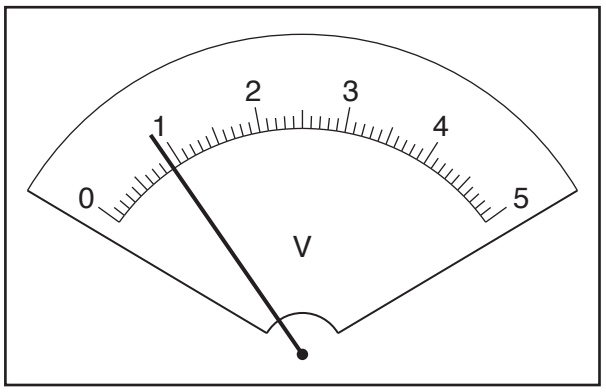

Fig. 2.3

(i) The student repeats the procedure using resistors **Y** and **Z**.
His readings are shown in Table 2.1.

Record, in Table 2.1, the value of the current I in the circuit and the value of the potential difference (p.d.) V across resistor **X** shown in Fig. 2.2 and Fig. 2.3.

View solution

Table 2.1

resistor	R /	I /	V /
X	1		
Y	3	0.55	1.7
Z	10	0.24	2.4

[2]

(ii) Add units to the column headings in Table 2.1. [2]

(c) Calculate the power P supplied to each of the resistors **X**, **Y** and **Z**.

View solution

Use the readings from Table 2.1 and the equation $P = I \times V$.
Give your answers to a suitable number of significant figures.

power P supplied to resistor **X** = ... W

power P supplied to resistor **Y** = ... W

power P supplied to resistor **Z** = ... W
[2]

(d) Describe how the value of the power P changes as R increases.

View solution

.....

.....

..... [2]

(e) Another student plans to investigate the relationship between P and R in more detail.
Suggest **two** modifications to the procedure that will enable her to do this.

View solution

1. .....

.....

2. .....

.....
[2]

[Total: 11]

© UCLES 2018

3 A student is investigating the image produced by a converging lens.

She is using the apparatus shown in Fig. 3.1.

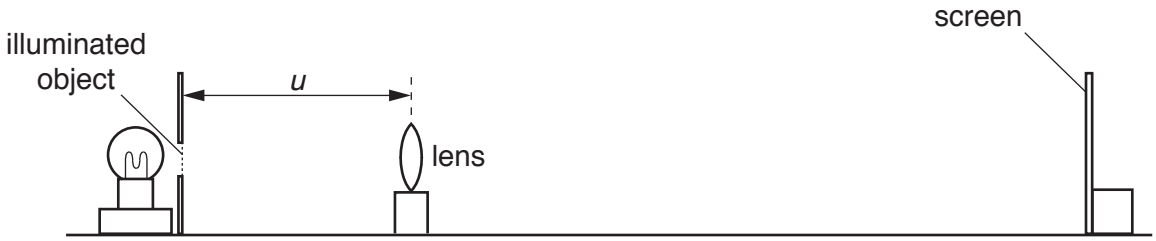

Fig. 3.1

(a) The illuminated object consists of a triangular-shaped hole in a piece of card. Fig. 3.2 shows, full size, the illuminated object. Measure and record the height h_o of the triangular-shaped hole.

h_o = ... cm [1]

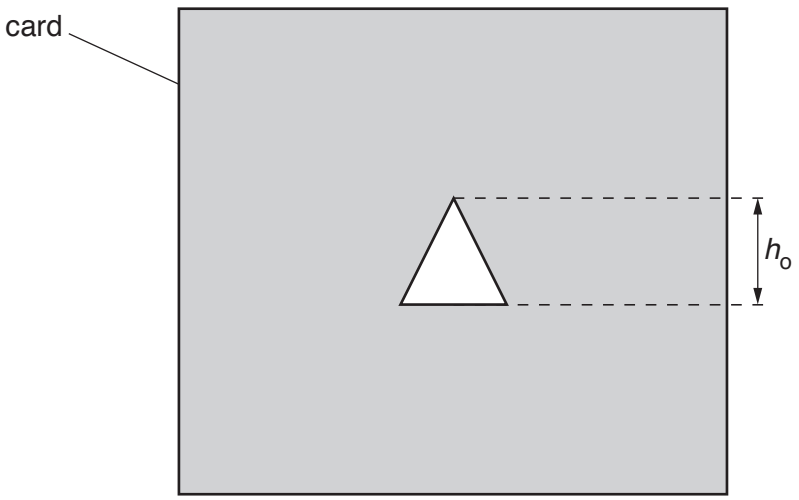

Fig. 3.2

(b) The distance u between the triangular object and the centre of the lens is set to 20.0 cm. The screen is moved until a focused image of the illuminated object is seen, as shown in Fig. 3.3.

View solution

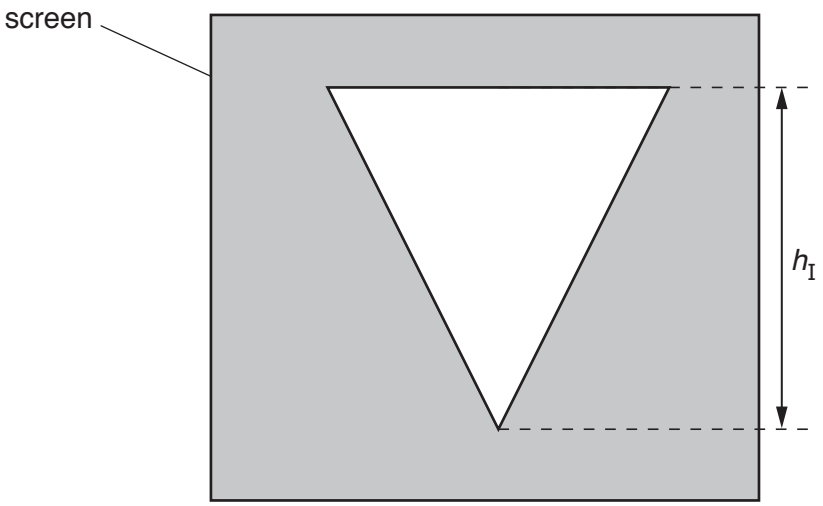

Fig. 3.3

The student repeats the procedure for u values of 30.0 cm, 40.0 cm, 50.0 cm and 60.0 cm. Her results are shown in Table 3.1.

(i) Measure and record in the first row of Table 3.1, the height h_I of the image. [1]

(ii) Calculate, and record in the table, a value N using your measurements for h_o and h_I and the equation $N = \frac{h_o}{h_I}$.

View solution

Table 3.1

u/cm	h_I/cm	N
20.0		
30.0	1.5	0.93
40.0	0.9	1.6
50.0	0.6	2.3
60.0	0.5	2.8

[1]

© UCLES 2018

(c) Plot a graph of u/cm (y-axis) against N (x-axis). You do not have to start your graph at the origin (0, 0).

View solution

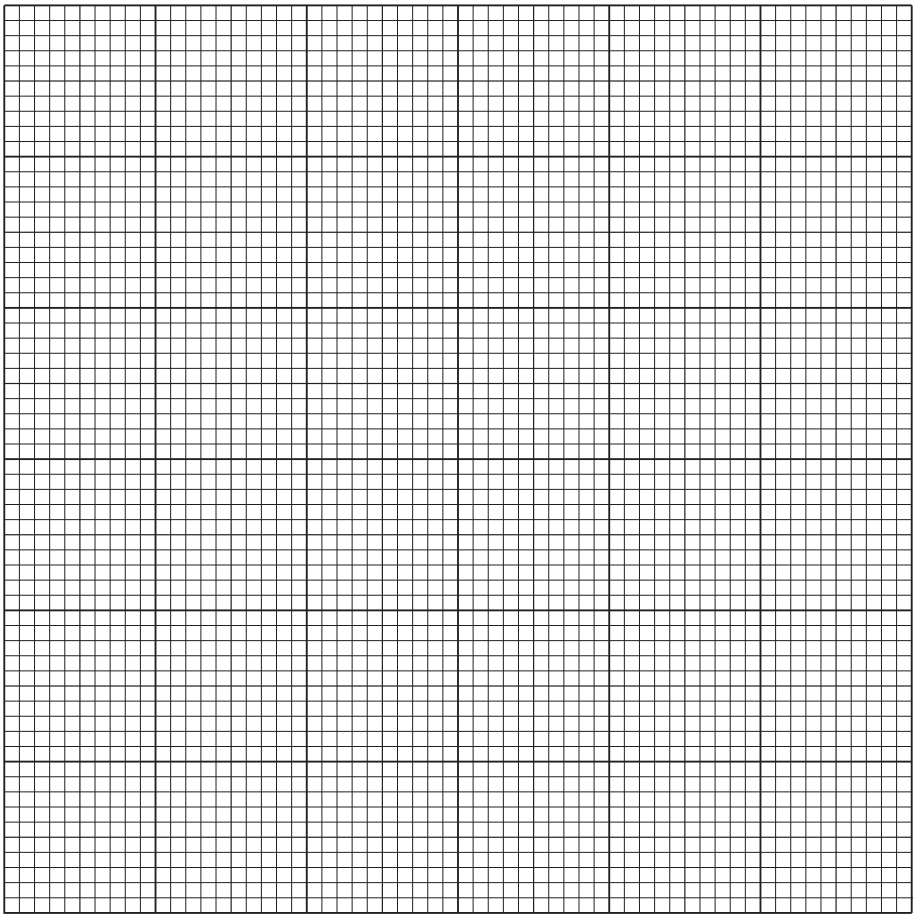

[4]

(d) Determine the gradient G of the graph.
Show clearly on the graph how you obtained the necessary information.

View solution

G = ... [2]

(e) Describe **one** difficulty that might be experienced when measuring the height of the image h_I. Suggest an improvement to the apparatus to overcome this difficulty.

difficulty .....

.....

improvement .....

.....

[2]

[Total: 11]

© UCLES 2018

4 A student is investigating the force needed to **just** slide a block across a surface.

Plan an experiment that will enable him to investigate how the force needed varies with the mass of the block.

View solution

The apparatus available includes:

a light, flat wooden block with a hook fitted as shown in Fig. 4.1

a pulley which can be clamped to a bench.

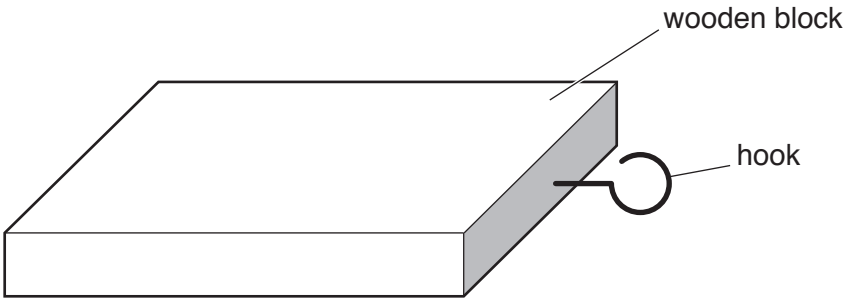

Fig. 4.1

In your plan, you should:

- list any additional apparatus needed
- draw a clearly labelled diagram of how the apparatus will be arranged
- give brief instructions for carrying out the experiment
- describe any precautions which should be taken to ensure reliable results
- suggest a graph which could be drawn.

© UCLES 2018

.....

.....

.....

.....

.....

.....

.....

.....

.....

.....

.....

.....

.....

.....

.....

.....

.....

.....

.....

.....

.....

..... [7]

[Total: 7]

Permission to reproduce items where third-party owned material protected by copyright is included has been sought and cleared where possible. Every reasonable effort has been made by the publisher (UCLES) to trace copyright holders, but if any items requiring clearance have unwittingly been included, the publisher will be pleased to make amends at the earliest possible opportunity.

To avoid the issue of disclosure of answer-related information to candidates, all copyright acknowledgements are reproduced online in the Cambridge International Examinations Copyright Acknowledgements Booklet. This is produced for each series of examinations and is freely available to download at www.cie.org.uk after the live examination series.

Cambridge International Examinations is part of the Cambridge Assessment Group. Cambridge Assessment is the brand name of University of Cambridge Local Examinations Syndicate (UCLES), which is itself a department of the University of Cambridge.