Cambridge Assessment International Education
Cambridge International General Certificate of Secondary Education

PHYSICS **0625/11**

Paper 1 Multiple Choice (Core) **May/June 2019**

45 minutes

Additional Materials: Multiple Choice Answer Sheet
Soft clean eraser
Soft pencil (type B or HB recommended)

READ THESE INSTRUCTIONS FIRST

Write in soft pencil.
Do not use staples, paper clips, glue or correction fluid.
Write your name, centre number and candidate number on the Answer Sheet in the spaces provided unless this has been done for you.
DO **NOT** WRITE IN ANY BARCODES.

There are **forty** questions on this paper. Answer **all** questions. For each question there are four possible answers **A**, **B**, **C** and **D**.
Choose the **one** you consider correct and record your choice in **soft pencil** on the separate Answer Sheet.

Read the instructions on the Answer Sheet very carefully.

Each correct answer will score one mark. A mark will not be deducted for a wrong answer.
Any rough working should be done in this booklet.
Electronic calculators may be used.
Take the weight of 1.0 kg to be 10 N (acceleration of free fall = 10 m / s^2).

This syllabus is regulated for use in England, Wales and Northern Ireland as a Cambridge International Level 1/Level 2 Certificate.

© UCLES 2019

1 A digital stop-clock measures time in minutes and seconds.

View solution

The stop-clock reads 00:50 when it is started (i.e. 00 minutes 50 seconds).

It reads 02:10 when it is stopped.

What is the shortest possible time that has elapsed between starting and stopping the stop-clock?

A 1 minute 20 seconds

B 2 minutes 00 seconds

C 2 minutes 10 seconds

D 3 minutes 00 seconds

2 A long-distance runner wishes to calculate her average speed for a race.

View solution

Which calculation should she use?

A average speed = $\frac{\text{total distance}}{\text{total time}}$

B average speed = total distance $\times$ total time

C average speed = $\frac{\text{total time}}{\text{total distance}}$

D average speed = total distance + total time

© UCLES 2019

3 A heavy metal ball falls vertically downwards through air past four equally spaced levels J, K, L and M.

View solution

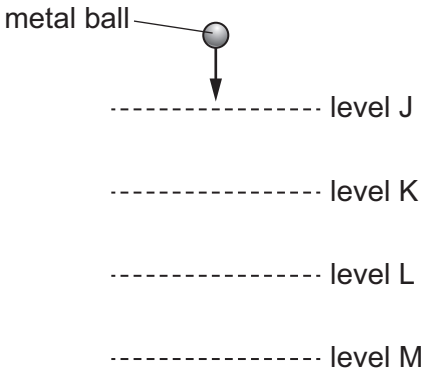

The times taken to fall from one level to the next are measured.

Where is the speed of the ball greatest and which time is shortest?

	speed is greatest between	time is shortest between
A	J and K	J and K
B	J and K	L and M
C	L and M	J and K
D	L and M	L and M

View solution

4 An arrow travels horizontally in a straight line at constant speed.

In which direction does the weight act?

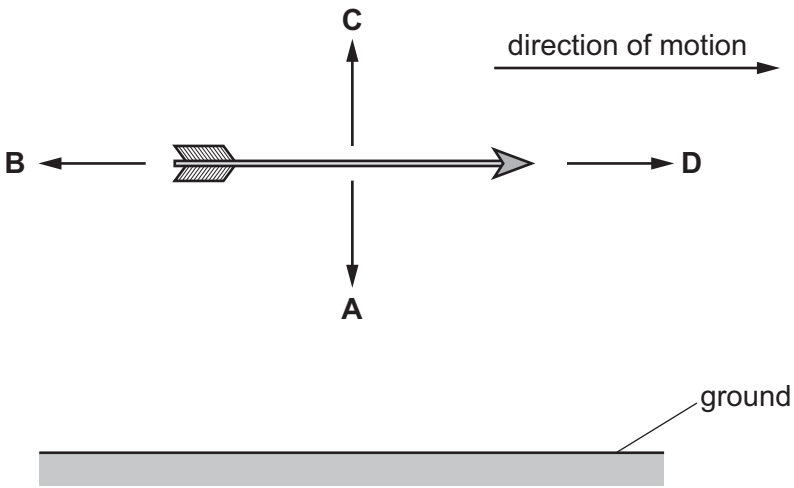

5 Two rectangular blocks consist of different materials.

View solution

Four different methods are suggested to compare the two masses.

1 Compare the accelerations with which they fall freely.

2 Compare the values of their lengths × breadths × heights.

3 Hang each in turn from the same spring. Compare the extensions.

4 Place one in the right-hand pan of a beam balance and the other in the left-hand pan.

Which methods give a comparison of the two masses?

A 1, 2 and 3 **B** 1 and 2 only **C** 3 and 4 only **D** 4 only

6 The diagrams show four solid blocks with their dimensions and masses.

View solution

Which block has the greatest density?

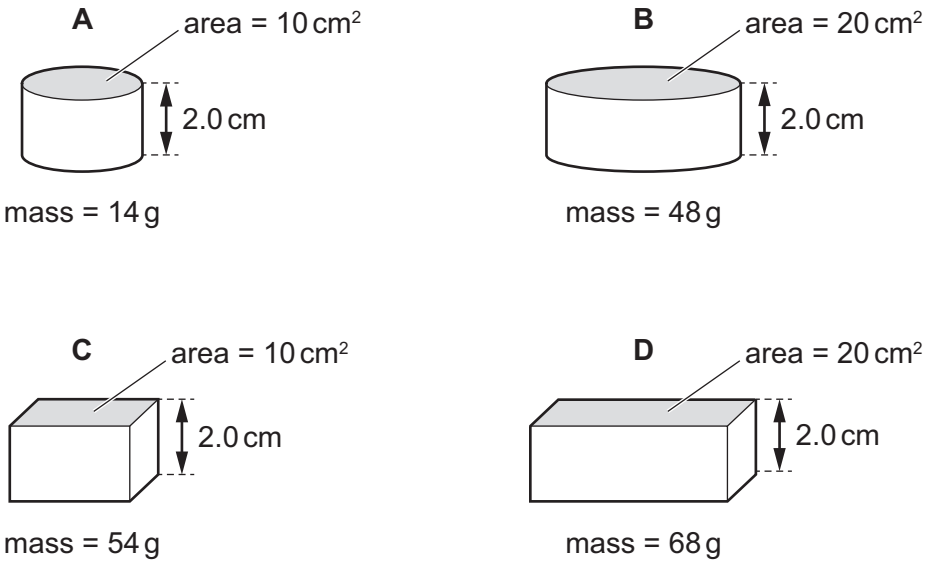

7 A mass of 20 kg is held stationary by a rope passing over a frictionless pulley.

View solution

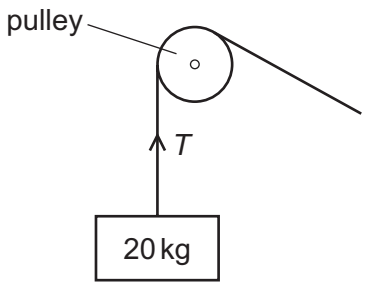

What is the tension *T* in the rope?

A 10 kg **B** 20 kg **C** 100 N **D** 200 N

© UCLES 2019

8 A spring is suspended from a stand. Loads are added and the extensions are measured.

View solution

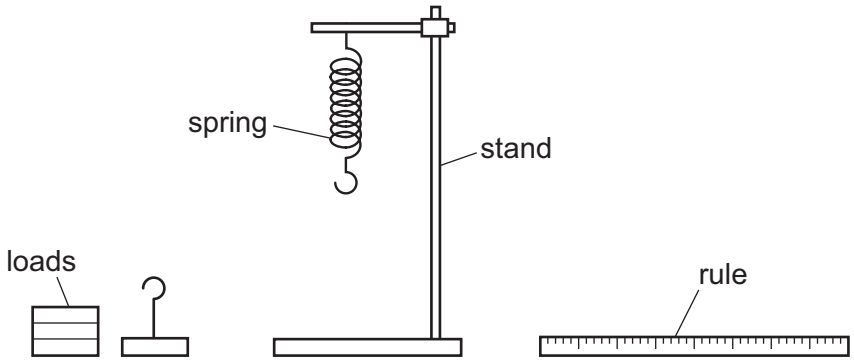

Which graph shows the result of plotting extension against load?

A

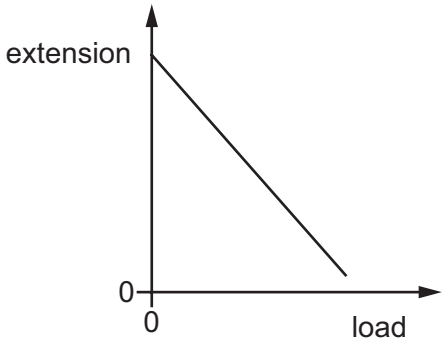

B

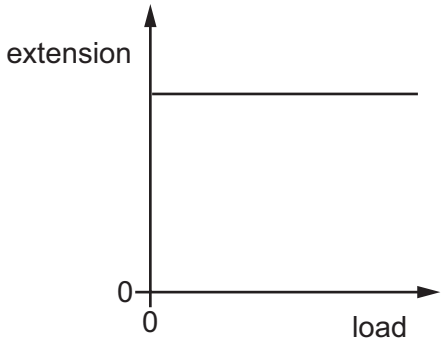

C

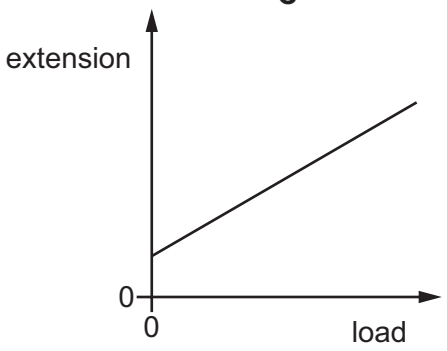

D

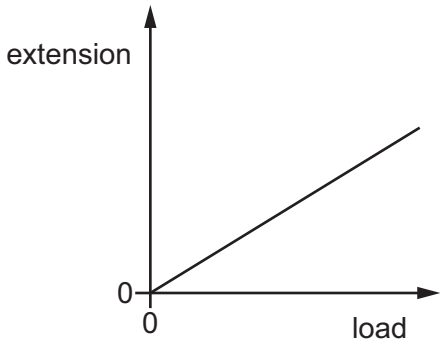

© UCLES 2019

9 A wooden bar is pivoted at its centre so that it can rotate freely. Two equal forces *F* are applied to the bar.

View solution

In which diagram is the turning effect greatest?

A

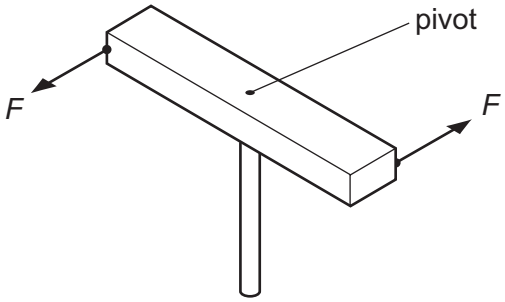

B

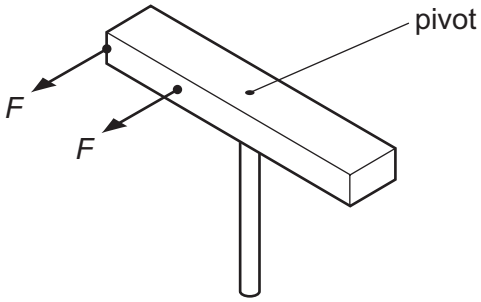

C

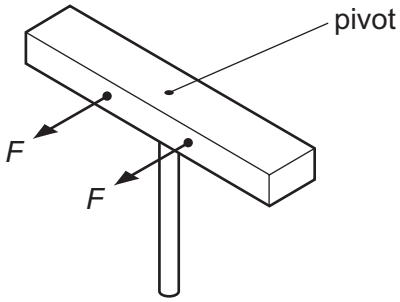

D

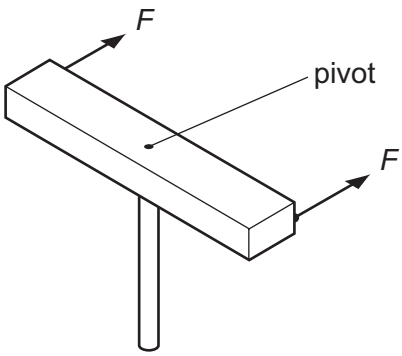

View solution

10 A machine is very efficient.

What does this mean?

A It produces a large amount of power.

B It uses very little energy.

C It wastes very little energy.

D It works very quickly.

View solution

11 An object is lifted vertically by a motor.

In which example is the power produced the greatest?

A lifting it a shorter distance in a longer time

B lifting it the same distance in a longer time

C lifting it a shorter distance in the same time

D lifting it the same distance in a shorter time

© UCLES 2019

12 Four identical submarines P, Q, R and S are lowered from one depth to another in water of a constant density.

View solution

The initial and final depths of each submarine are shown in the diagram.

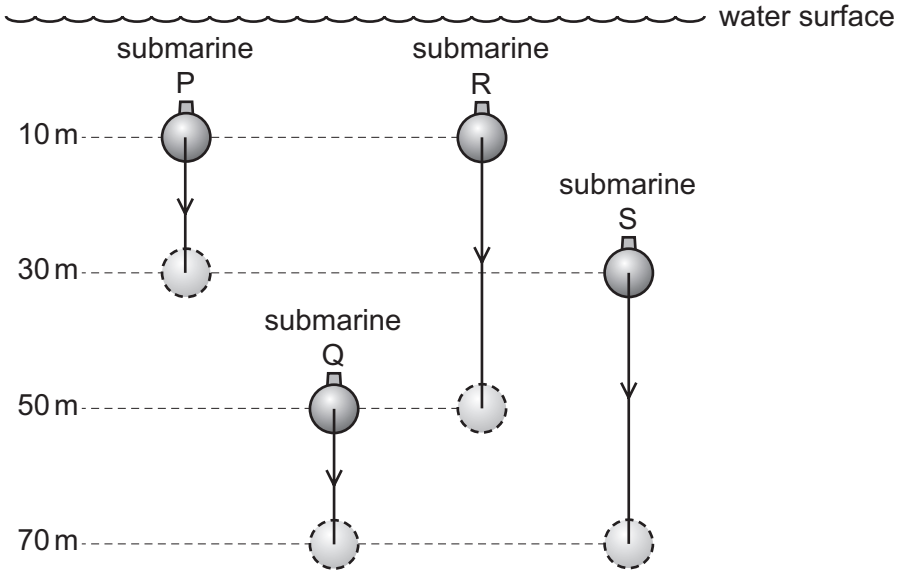

Which row is correct for the difference in pressure from the initial to final depth of each submarine?

	least change in pressure	greatest change in pressure
A	submarines P and Q	submarines R and S
B	submarines P and Q	submarine R only
C	submarine P only	submarines R and S
D	submarine P only	submarine R only

© UCLES 2019

13 The diagram shows a stone suspended on a string under the surface of a liquid. The stone experiences a pressure caused by the liquid.

View solution

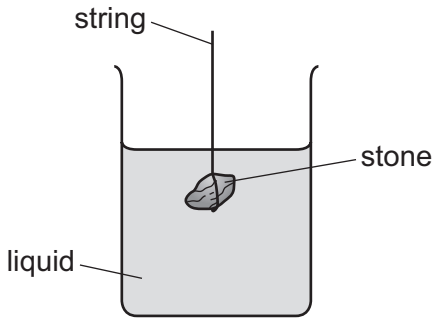

What would increase the pressure on the stone?

A decreasing the surface area of the stone

B increasing the mass of the stone

C lowering the stone deeper into the liquid

D using a liquid with a lower density

14 Why can a gas be compressed easily into a smaller volume?

View solution

A The molecules are far apart.

B The molecules do not attract each other.

C The molecules move randomly.

D The volume of each molecule can be reduced.

15 When a liquid evaporates, some molecules escape. The temperature of the remaining liquid changes.

View solution

What is the effect on the temperature and from where do the molecules escape?

	temperature of liquid	molecules escape from
A	decreases	everywhere within the liquid
B	decreases	the surface only
C	increases	everywhere within the liquid
D	increases	the surface only

16 What happens when a metal block is heated?

View solution

A Its breadth, height and length all increase.

B Its width increases only.

C Its height increases only.

D Its length increases only.

© UCLES 2019

17 A night storage heater contains a large block of material that is heated electrically during the night. During the day the block cools down, releasing thermal energy into the room.

View solution

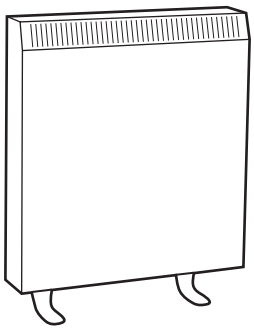

Which thermal capacity and which night-time temperature increase will cause the most energy to be stored by the block?

	thermal capacity of block	night-time temperature increase
A	large	large
B	large	small
C	small	large
D	small	small

18 The diagram shows the changes of state P, Q, R and S that occur in solids, liquids and gases when they gain or lose thermal energy.

View solution

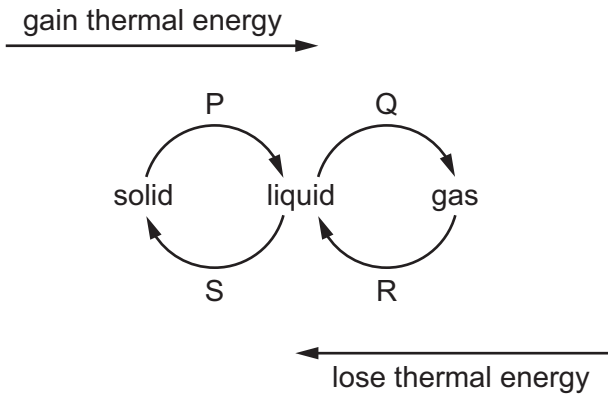

What is the name of change R?

A condensation

B solidification

C boiling

D melting

19 In which does thermal conduction **not** occur?

View solution

A a gas

B a liquid

C a solid

D a vacuum

20 The metal surface of a kettle is hot.

View solution

What happens to the cool air outside the kettle when it comes into contact with the hot kettle?

A The density of the air decreases and the air falls.

B The density of the air decreases and the air rises.

C The density of the air increases and the air falls.

D The density of the air increases and the air rises.

21 Ultrasound is used in a hospital to scan a patient. Ultrasound refracts at the boundary between muscle and bone because it travels at a greater speed in bone.

View solution

Which change takes place when the ultrasound travels from muscle into bone?

A The frequency of the wave decreases.

B The frequency of the wave increases.

C The wavelength of the wave decreases.

D The wavelength of the wave increases.

© UCLES 2019

22 The diagram shows a cork with a weight attached so that the cork floats upright in water.

View solution

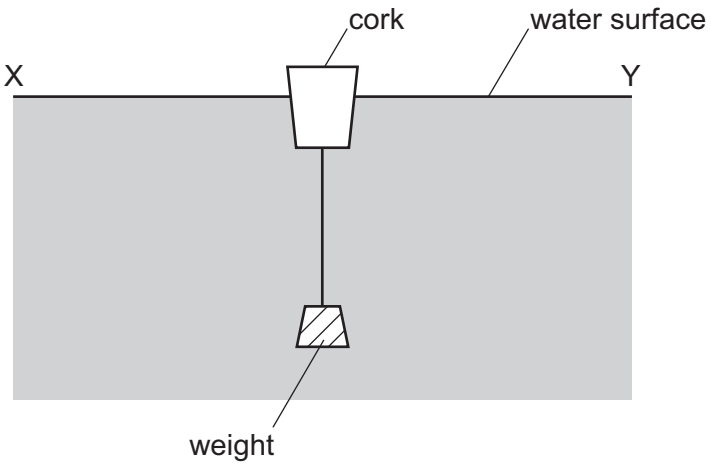

Transverse waves travel across the water from X to Y.

In which direction do the waves make the cork move?

A $\rightarrow \leftarrow$ right and left

B $\uparrow\downarrow$ up and down

C $\rightarrow$ only to the right

D $\leftarrow$ only to the left

23 An object is placed 30 cm in front of a plane mirror.

View solution

Which statement describes the image of the object?

A The image is the same size and 30 cm from the object.

B The image is the same size and 60 cm from the object.

C The image is smaller and 30 cm from the object.

D The image is smaller and 60 cm from the object.

© UCLES 2019

24 The diagram shows light incident at a glass-air boundary. The angle of incidence *i* of the ray is greater than the critical angle.

View solution

Which line shows the path of the light after it meets the boundary?

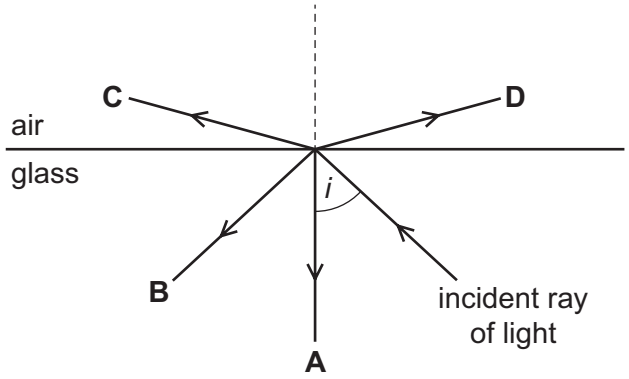

25 The diagram shows radiation from a lamp passing through a prism.

View solution

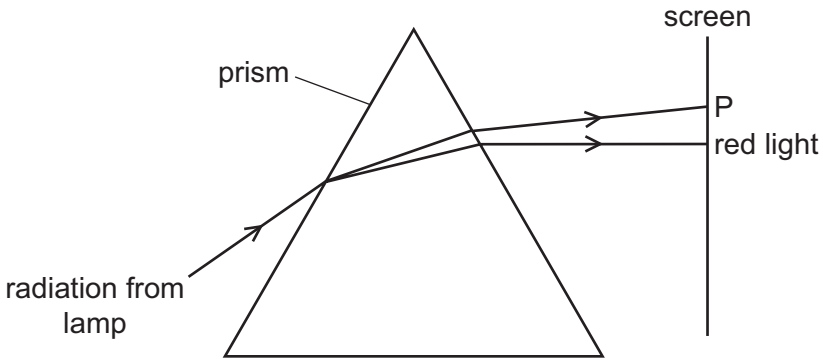

Which type of radiation is found at P?

A γ-rays

B infrared

C ultraviolet

D X-rays

26 A pulse of sound is produced at the bottom of a boat. The sound travels through the water and is reflected from a shoal of fish. The sound reaches the boat again after 1.2 s. The speed of sound in the water is 1500 m / s.

View solution

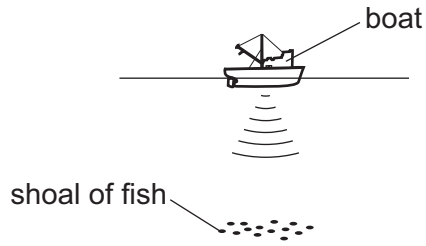

How far below the bottom of the boat is the shoal of fish?

A 450 m **B** 900 m **C** 1800 m **D** 3600 m

27 Which range is approximately correct for the audio frequencies that can be detected by a healthy human ear?

View solution

A 2 Hz to 2000 Hz

B 2 Hz to 20 000 Hz

C 20 Hz to 2000 Hz

D 20 Hz to 20 000 Hz

28 Why is soft iron used for the core of an electromagnet?

View solution

A Soft iron easily becomes a permanent magnet.

B Soft iron is a good electrical conductor.

C Soft iron is a poor thermal conductor.

D Soft iron loses its magnetism when the current in the coil is switched off.

© UCLES 2019

29 An iron ball on a horizontal wooden table rolls near the north pole of a bar magnet which is lying on the table.

View solution

Which diagram shows the most likely path of the ball, as seen from above the table?

A

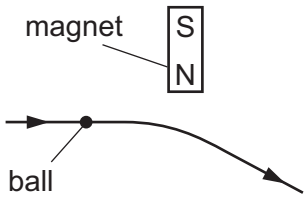

B

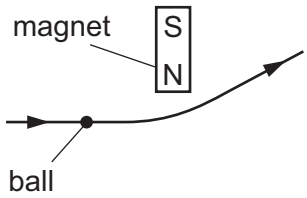

C

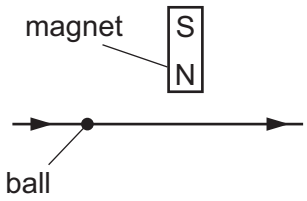

D

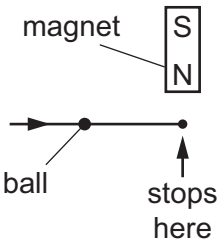

30 Diagram 1 shows two thin, uncharged strips of plastic.

View solution

Diagram 2 shows the same strips after they have been rubbed with a dry cloth.

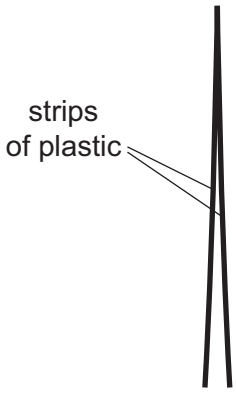

diagram 1

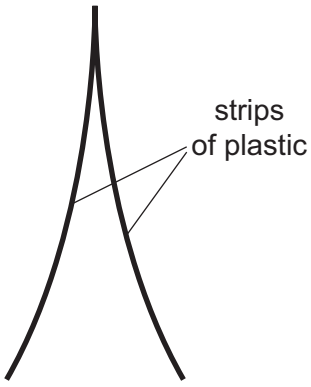

diagram 2

Which row describes the charge on the strips after rubbing, and the force between the strips after rubbing?

	charge on strips	force between strips
A	opposite	attraction
B	opposite	repulsion
C	the same	attraction
D	the same	repulsion

© UCLES 2019

31 A voltmeter and an ammeter are used to measure the resistance of a resistor.

View solution

Which diagram shows the voltmeter and the ammeter correctly connected?

A

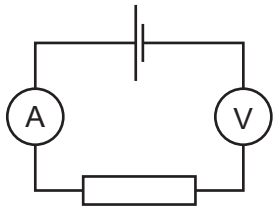

B

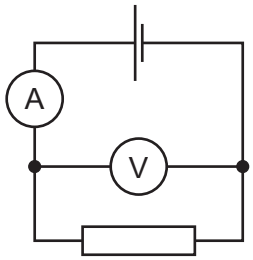

C

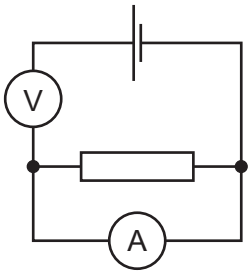

D

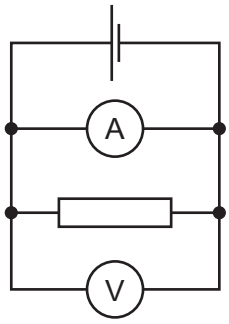

32 A student sets up four circuits.

View solution

In which circuit is there a heater in series with a fuse?

A

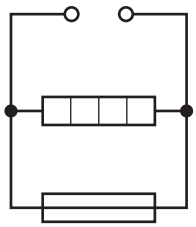

B

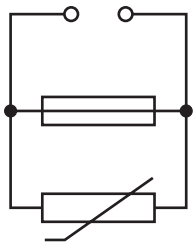

C

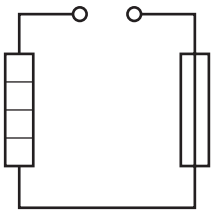

D

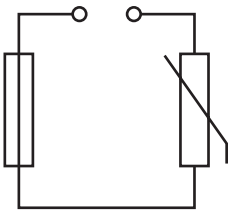

33 The diagram shows a circuit containing a d.c. power supply, a motor and a variable resistor.

View solution

Three ammeters X, Y and Z show the current in different parts of the circuit.

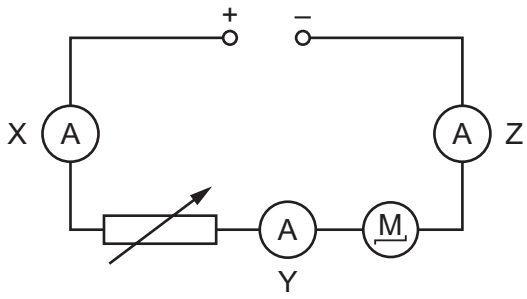

The reading on X is 4.0 A.

Which statement is correct?

A The readings on Y and Z are both less than 4.0 A.

B The readings on Y and Z are both equal to 4.0 A.

C The readings on Y and Z are both greater than 4.0 A.

D The reading on Z is zero.

34 A lamp is to be connected in a circuit so that the potential difference (p.d.) across it can be varied from 0 to 6 V.

View solution

Which circuit would be most suitable?

A

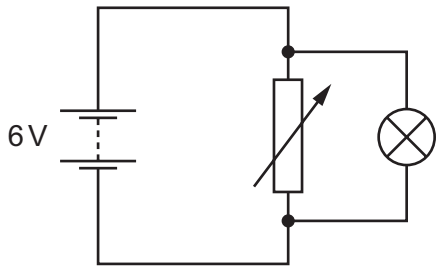

B

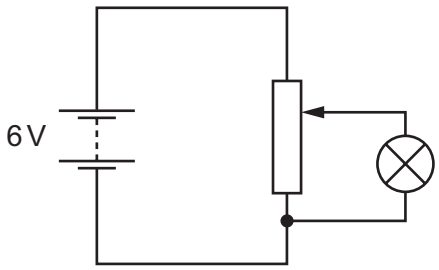

C

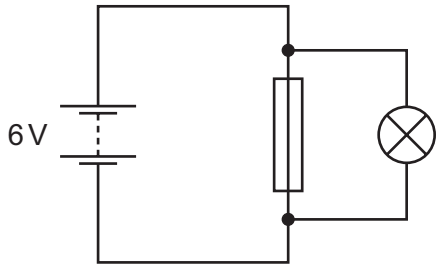

D

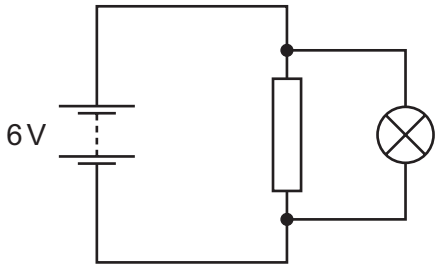

35 An electric heater is plugged into the mains supply using a fused plug.

View solution

The current in the heater is 10 A.

The cable attached to the heater is rated at 15 A.

The fuses available are rated at 1 A, 3 A, 5 A and 13 A.

Which fuse should be used?

A 1 A **B** 3 A **C** 5 A **D** 13 A

36 A bar magnet is held near a coil of wire. The coil is connected to a sensitive voltmeter.

View solution

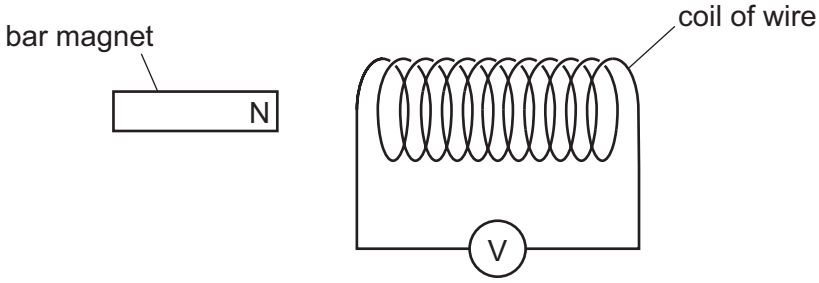

The N-pole of the magnet is moved quickly towards the coil. The voltmeter shows a reading of +10 mV.

The N-pole of the magnet is then moved slowly away from the same end of the coil. The reading on the voltmeter is observed.

Which voltmeter reading is possible?

A –15 mV **B** –5 mV **C** 0 mV **D** +5 mV

© UCLES 2019

37 Four small compasses are placed around a solenoid.

View solution

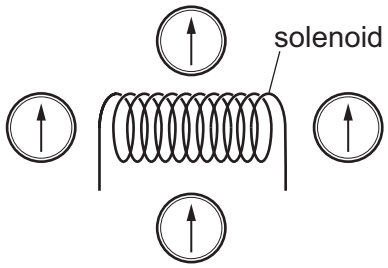

A current is now switched on in the solenoid.

Which diagram shows possible new directions of the compass needles?

A

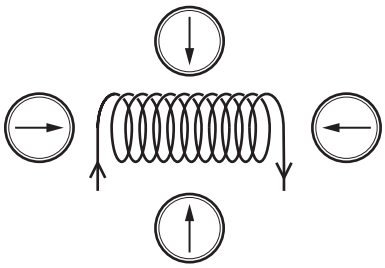

B

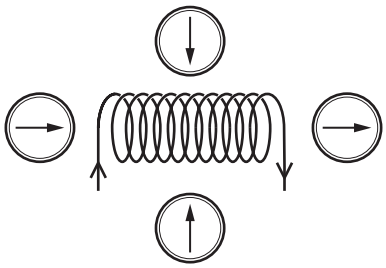

C

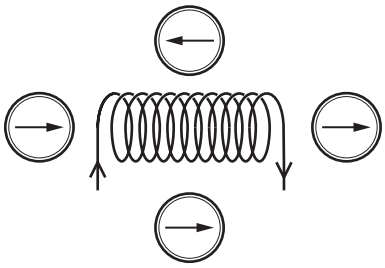

D

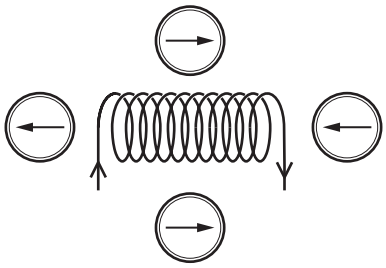

38 Four nuclides are represented below.

View solution

$^{6}_{3}E$ $^{7}_{3}G$ $^{6}_{4}L$ $^{7}_{5}M$

Which pair of nuclides are isotopes of the same element?

A E and G **B** E and L **C** G and L **D** G and M

© UCLES 2019

39 A student measures the level of radiation emitted from a radioactive substance. He places a detector very close to the substance. He puts different absorbers between the radioactive substance and the detector.

View solution

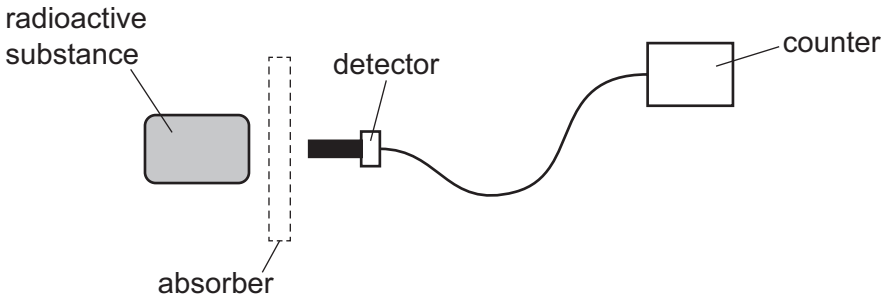

The student's results are shown. These results are corrected for background radiation.

absorber	$\frac{\text{counter reading}}{\text{counts per minute}}$
none	95
thin paper	52
few mm of aluminium	52
several cm of lead	12

Which types of radiation are being emitted by the substance?

A α-particles and β-particles only

B α-particles and γ-rays only

C β-particles and γ-rays only

D α-particles, β-particles and γ-rays

View solution

40 The nuclei of the atoms in a substance are changing randomly and emitting radiation.

What is happening to the substance?

A It is undergoing electromagnetic induction.

B It is undergoing magnetisation.

C It is undergoing solidification.

D It is undergoing radioactive decay.

© UCLES 2019

BLANK PAGE

Permission to reproduce items where third-party owned material protected by copyright is included has been sought and cleared where possible. Every reasonable effort has been made by the publisher (UCLES) to trace copyright holders, but if any items requiring clearance have unwittingly been included, the publisher will be pleased to make amends at the earliest possible opportunity.

To avoid the issue of disclosure of answer-related information to candidates, all copyright acknowledgements are reproduced online in the Cambridge Assessment International Education Copyright Acknowledgements Booklet. This is produced for each series of examinations and is freely available to download at www.cambridgeinternational.org after the live examination series.

Cambridge Assessment International Education is part of the Cambridge Assessment Group. Cambridge Assessment is the brand name of the University of Cambridge Local Examinations Syndicate (UCLES), which itself is a department of the University of Cambridge.

© UCLES 2019