Cambridge Assessment International Education
Cambridge International General Certificate of Secondary Education

PHYSICS **0625/12**

Paper 1 Multiple Choice (Core) **May/June 2019**

45 minutes

Additional Materials: Multiple Choice Answer Sheet
Soft clean eraser
Soft pencil (type B or HB recommended)

READ THESE INSTRUCTIONS FIRST

Write in soft pencil.
Do not use staples, paper clips, glue or correction fluid.
Write your name, centre number and candidate number on the Answer Sheet in the spaces provided unless this has been done for you.
DO **NOT** WRITE IN ANY BARCODES.

There are **forty** questions on this paper. Answer **all** questions. For each question there are four possible answers **A**, **B**, **C** and **D**.
Choose the **one** you consider correct and record your choice in **soft pencil** on the separate Answer Sheet.

Read the instructions on the Answer Sheet very carefully.

Each correct answer will score one mark. A mark will not be deducted for a wrong answer.
Any rough working should be done in this booklet.
Electronic calculators may be used.
Take the weight of 1.0 kg to be 10 N (acceleration of free fall = 10 m / s^2).

This syllabus is regulated for use in England, Wales and Northern Ireland as a Cambridge International Level 1/Level 2 Certificate.

This document consists of **20** printed pages.

© UCLES 2019

1 Diagram 1 shows a measuring cylinder containing water. A metal weight with a cork attached by a thread is held above the water.

View solution

Diagram 2 shows the apparatus after the weight has been lowered into the water.

Diagram 3 shows the apparatus after the weight and the cork have been submerged.

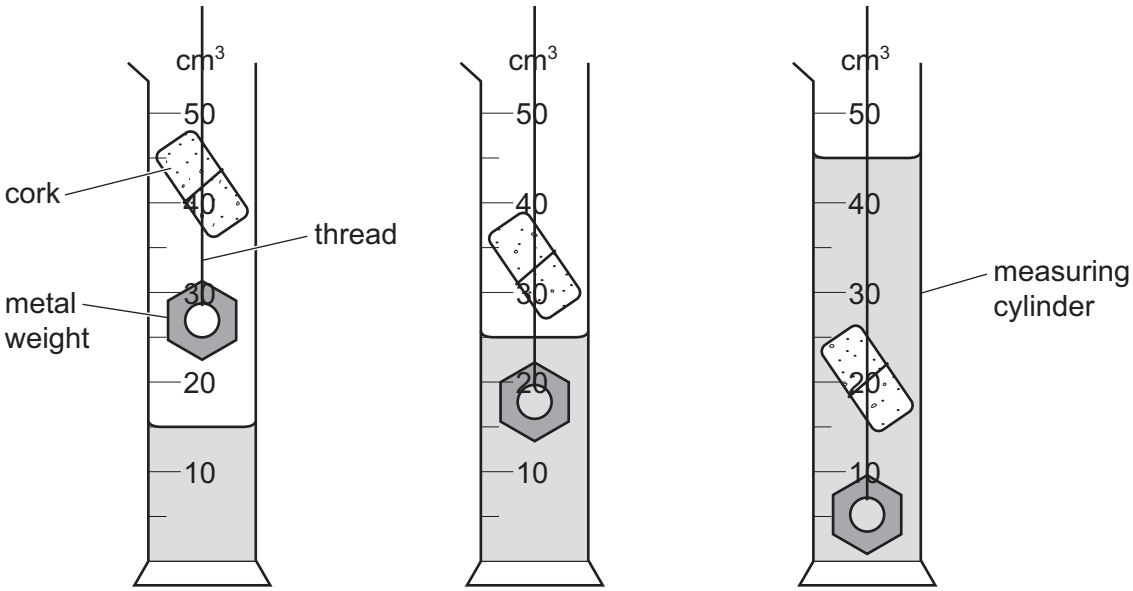

diagram 1 diagram 2 diagram 3

What is the volume of the cork?

A 20 cm^3 **B** 30 cm^3 **C** 45 cm^3 **D** 70 cm^3

2 A car travels at constant speed.

Which pair of graphs show both how the distance travelled by the car and the car's speed vary with time?

View solution

A

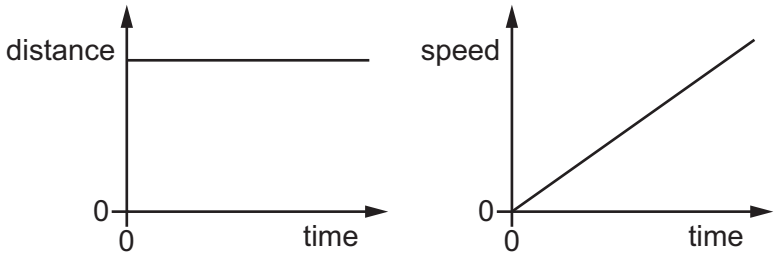

B

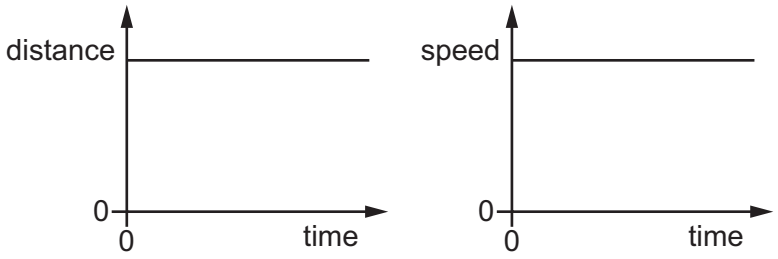

C

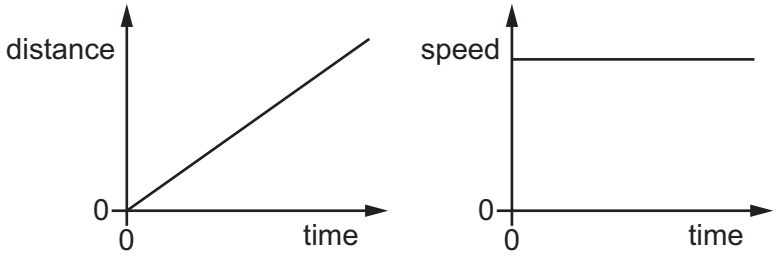

D

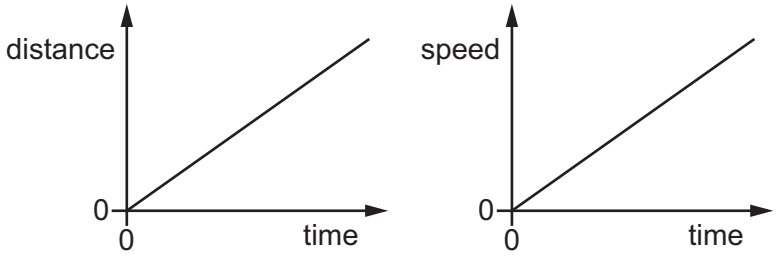

© UCLES 2019

3 A heavy metal ball falls vertically downwards through air past four equally spaced levels J, K, L and M.

View solution

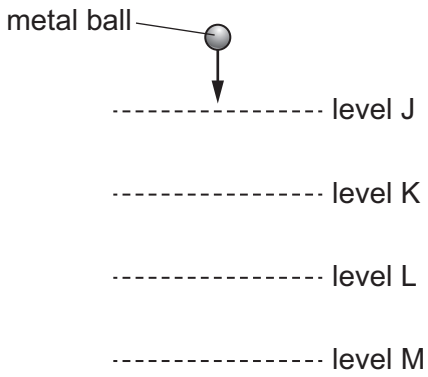

The times taken to fall from one level to the next are measured.

Where is the speed of the ball greatest and which time is shortest?

	speed is greatest between	time is shortest between
A	J and K	J and K
B	J and K	L and M
C	L and M	J and K
D	L and M	L and M

4 Which row contains two correct statements about the mass and the weight of an object?

	mass of an object	weight of an object
A	is measured using a measuring cylinder	is measured using a balance
B	is the gravitational force exerted on the object	is the amount of matter in the object
C	is measured in newtons	is measured in kilograms
D	is the same everywhere	can vary from place to place

View solution

5 The table gives approximate values of the acceleration due to gravity and the atmospheric pressure on three planets.

View solution

	Earth	Venus	Mars
$\frac{\text{acceleration due to gravity}}{\text{m/s}^2}$	10	9	4
atmospheric pressure / kPa	100	9000	1

A body has a mass of 10 kg on Earth.

Which statement about the weight of the body is correct?

A The weight is greatest on Earth.

B The weight is greatest on Mars.

C The weight is greatest on Venus.

D The weight is the same on each planet.

6 A metal has a density of 8.0 g / cm^3. A solid cube of mass 1.0 kg is made from this metal.

View solution

How long is each side of the cube?

A 0.50 cm **B** 2.0 cm **C** 5.0 cm **D** 42 cm

7 Which object is in equilibrium?

View solution

A

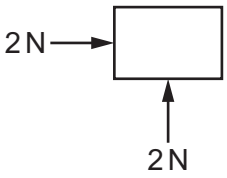

B

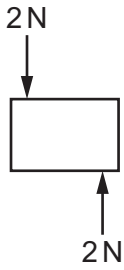

C

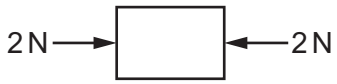

D

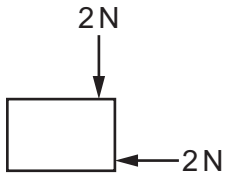

8 A spring is suspended from a stand. Loads are added and the extensions are measured.

View solution

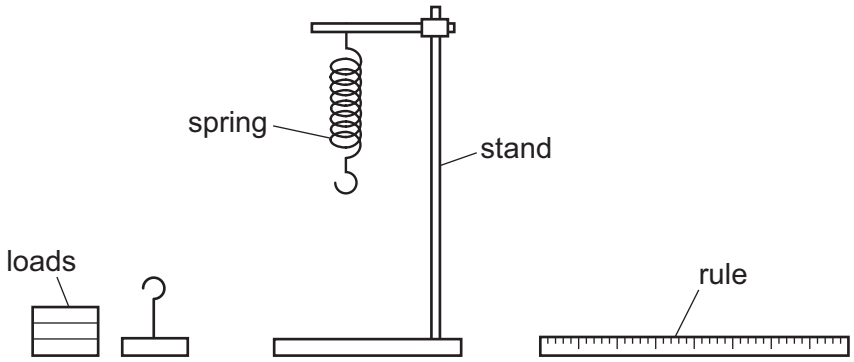

Which graph shows the result of plotting extension against load?

A

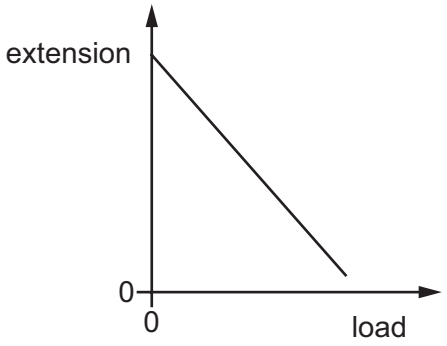

B

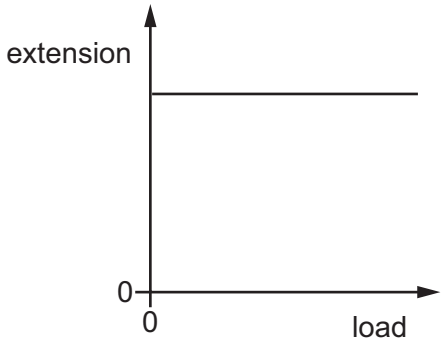

C

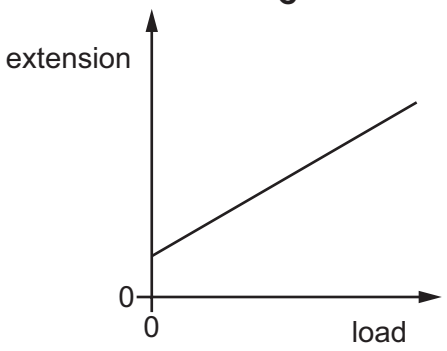

D

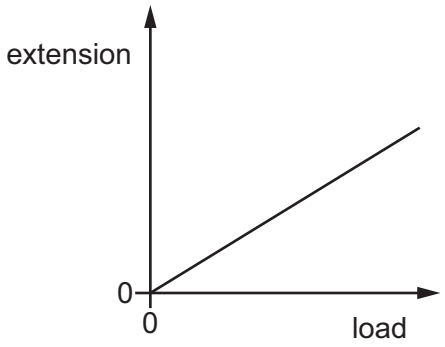

© UCLES 2019

9 A wooden bar is pivoted at its centre so that it can rotate freely. Two equal forces *F* are applied to the bar.

View solution

In which diagram is the turning effect greatest?

A

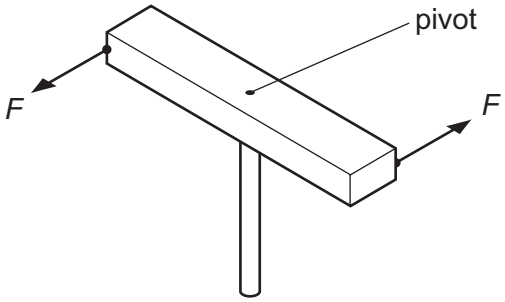

B

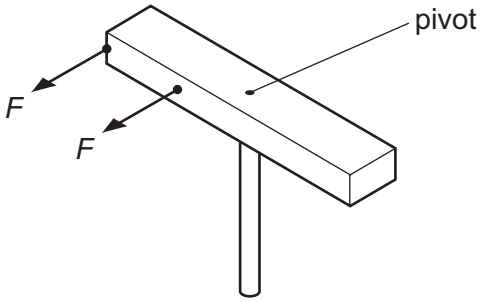

C

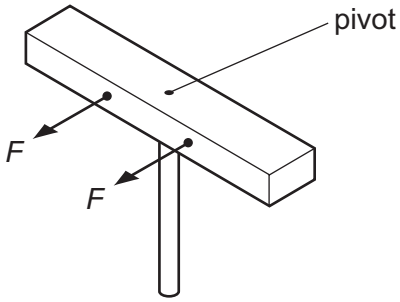

D

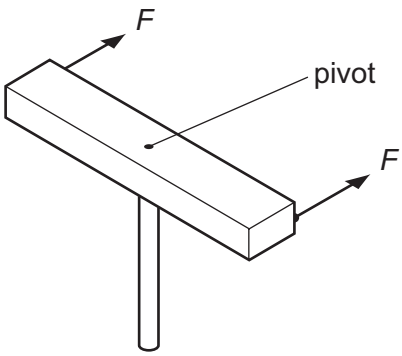

View solution

10 A machine is very efficient.

What does this mean?

A It produces a large amount of power.

B It uses very little energy.

C It wastes very little energy.

D It works very quickly.

© UCLES 2019

11 An object falls under gravity.

View solution

What happens to the gravitational potential energy and to the kinetic energy of the object?

	gravitational potential energy	kinetic energy
A	decreases	decreases
B	decreases	increases
C	increases	decreases
D	increases	increases

12 A student is testing four different electric motors. He measures the time it takes for a motor to lift either a heavy load or a light load through a height of 1 metre.

View solution

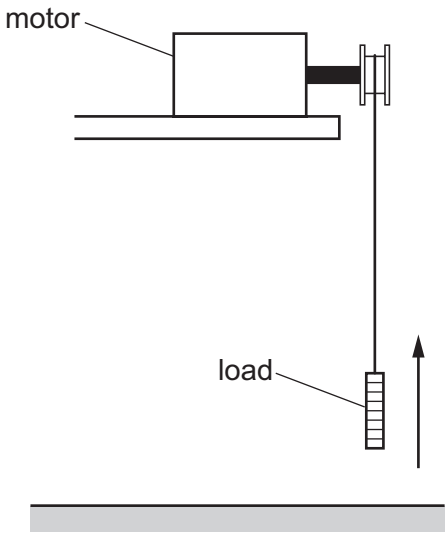

He makes a similar measurement for the other three motors.

The table shows his results.

Which motor produces the most power?

	load	time taken / s
A	heavy	12
B	heavy	16
C	light	12
D	light	16

© UCLES 2019

13 The diagram shows a stone suspended on a string under the surface of a liquid. The stone experiences a pressure caused by the liquid.

View solution

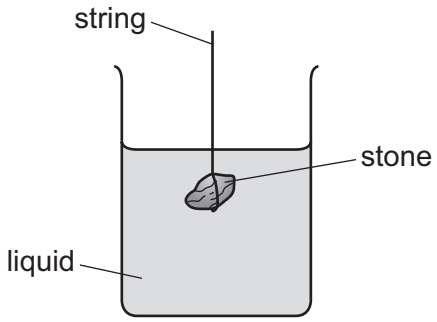

What would increase the pressure on the stone?

A decreasing the surface area of the stone

B increasing the mass of the stone

C lowering the stone deeper into the liquid

D using a liquid with a lower density

14 A sample of mercury is heated.

View solution

In which states of matter will its volume increase as its temperature rises?

A gas only

B liquid and gas only

C solid and liquid only

D solid, liquid and gas

15 When water evaporates, what escapes from the surface of the water?

View solution

A individual atoms

B individual molecules

C individual protons

D tiny drops of water

© UCLES 2019

16 The resistance of a resistor varies linearly with temperature as shown on the graph.

View solution

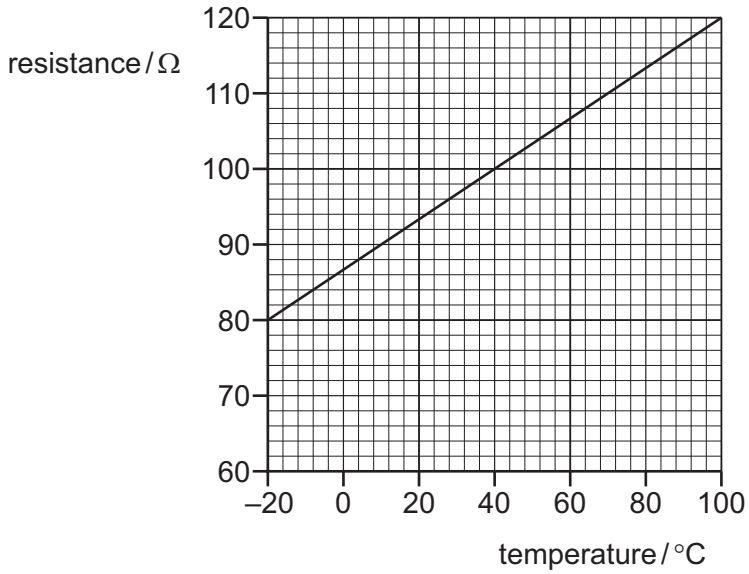

Which statement is correct?

A When immersed in boiling water, the resistance is 120 Ω.

B The resistance at the lower fixed point is 80 Ω.

C When the resistance is 100 Ω the temperature is 120 °C.

D The resistor can only be used at temperatures between 0 °C and 100 °C.

17 A night storage heater contains a large block of material that is heated electrically during the night. During the day the block cools down, releasing thermal energy into the room.

View solution

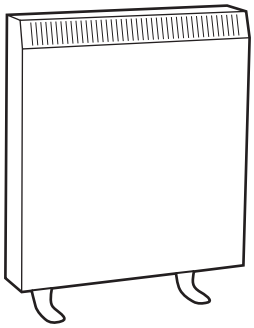

Which thermal capacity and which night-time temperature increase will cause the most energy to be stored by the block?

	thermal capacity of block	night-time temperature increase
A	large	large
B	large	small
C	small	large
D	small	small

18 Which row describes the process of condensation?

View solution

	change of state	separation of molecules
A	gas to liquid	decreases
B	gas to liquid	increases
C	liquid to gas	decreases
D	liquid to gas	increases

19 The metal surface of a kettle is hot.

View solution

What happens to the cool air outside the kettle when it comes into contact with the hot kettle?

A The density of the air decreases and the air falls.

B The density of the air decreases and the air rises.

C The density of the air increases and the air falls.

D The density of the air increases and the air rises.

20 Vacuum flasks usually have silvered walls that help to keep the contents of the flask hot.

View solution

Why are the walls silvered?

A to absorb thermal energy from the air around the flask

B to increase the rate of convection inside the flask

C to reduce energy loss to the surroundings by conduction

D to reflect thermal radiation back into the flask

© UCLES 2019

21 The diagrams show graphs of displacement against time for four waves. All the graphs are drawn to the same scale.

View solution

Which wave has the largest amplitude and the highest frequency?

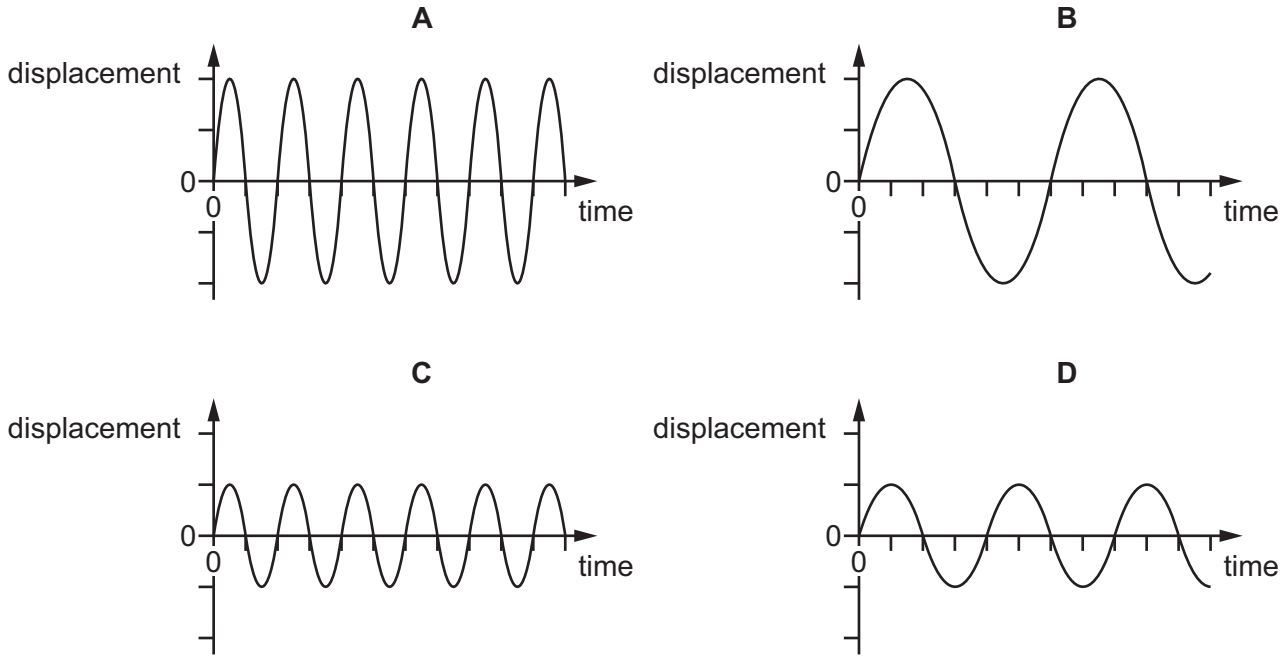

22 The diagram shows a cork with a weight attached so that the cork floats upright in water.

View solution

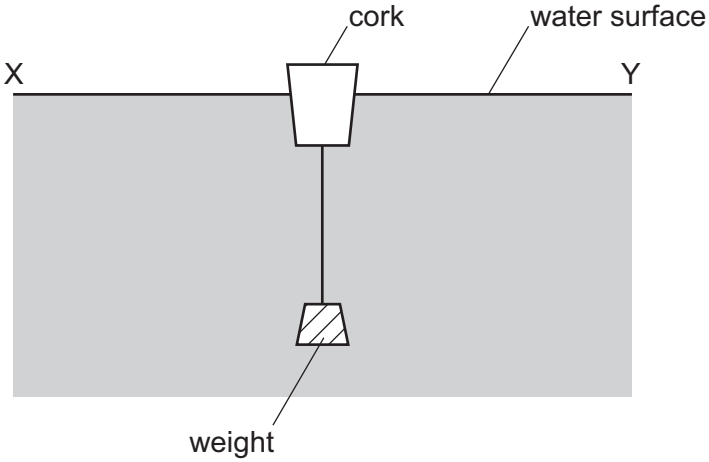

Transverse waves travel across the water from X to Y.

In which direction do the waves make the cork move?

A $\rightarrow \leftarrow$ right and left

B $\uparrow\downarrow$ up and down

C $\rightarrow$ only to the right

D $\leftarrow$ only to the left

© UCLES 2019

23 Which conditions are necessary for light to be totally internally reflected?

View solution

	the incident light is in	angle of incidence
A	the less dense medium	less than the critical angle
B	the less dense medium	greater than the critical angle
C	the more dense medium	less than the critical angle
D	the more dense medium	greater than the critical angle

24 Which diagram shows the dispersion of white light by a glass prism?

View solution

A

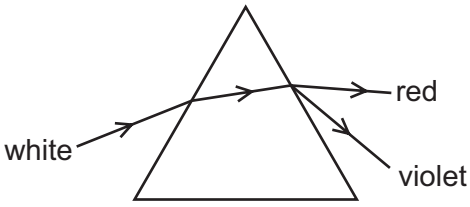

B

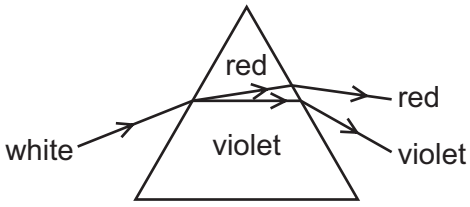

C

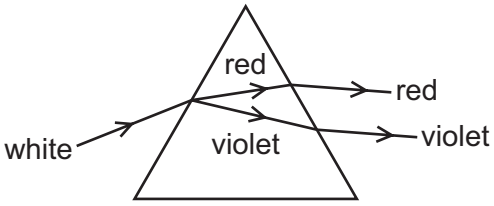

D

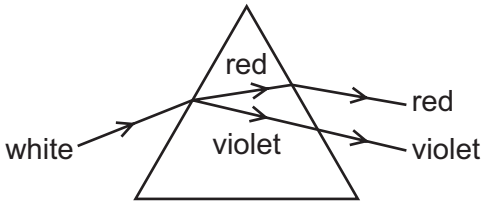

25 The diagram shows radiation from a lamp passing through a prism.

View solution

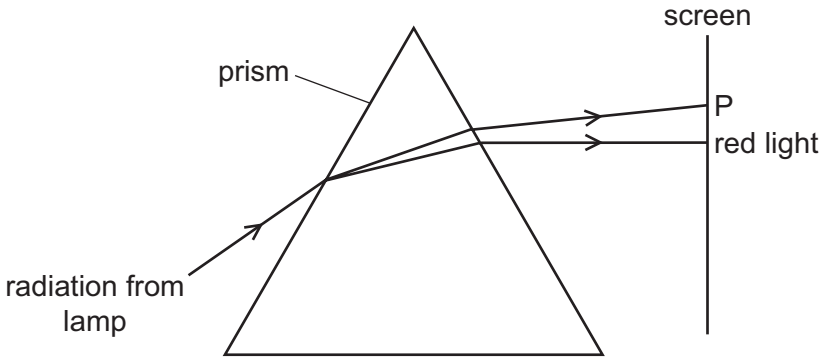

Which type of radiation is found at P?

A γ-rays

B infrared

C ultraviolet

D X-rays

26 A pulse of sound is produced at the bottom of a boat. The sound travels through the water and is reflected from a shoal of fish. The sound reaches the boat again after 1.2 s. The speed of sound in the water is 1500 m / s.

View solution

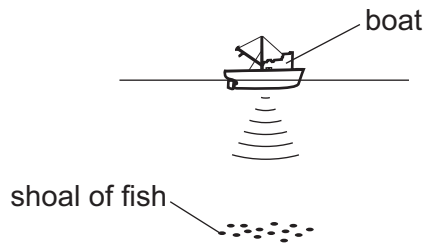

How far below the bottom of the boat is the shoal of fish?

A 450 m **B** 900 m **C** 1800 m **D** 3600 m

27 An observer stands at the finish line of a 100 m race. He wants to time the winner's run. He starts his stop-watch as soon as he sees the smoke from the starting gun instead of when he hears the bang.

View solution

What is the reason for doing this?

A Light travels much faster than sound.

B There is a risk he might respond to an echo from a wall.

C Humans react slower to sound than to light.

D Humans react more quickly to sound than to light.

28 A soft iron bar is a long way from any magnetic field.

View solution

How can the material of the bar be described?

A It is magnetic and strongly magnetised.

B It is magnetic and unmagnetised.

C It is non-magnetic and strongly magnetised.

D It is non-magnetic and unmagnetised.

© UCLES 2019

29 An iron ball on a horizontal wooden table rolls near the north pole of a bar magnet which is lying on the table.

View solution

Which diagram shows the most likely path of the ball, as seen from above the table?

A

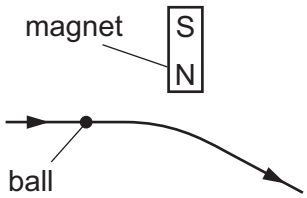

B

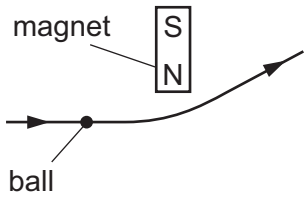

C

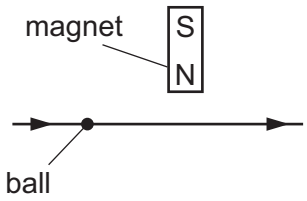

D

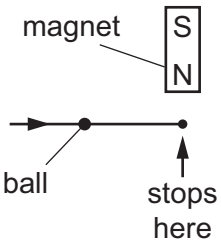

30 Diagram 1 shows two thin, uncharged strips of plastic.

View solution

Diagram 2 shows the same strips after they have been rubbed with a dry cloth.

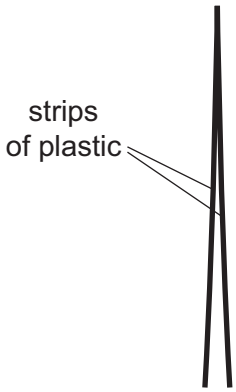

diagram 1

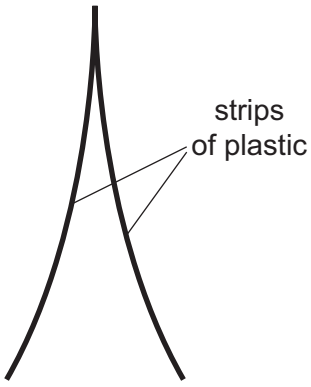

diagram 2

Which row describes the charge on the strips after rubbing, and the force between the strips after rubbing?

	charge on strips	force between strips
A	opposite	attraction
B	opposite	repulsion
C	the same	attraction
D	the same	repulsion

© UCLES 2019

31 An ammeter and a voltmeter are used to determine the resistance of a resistor.

View solution

Which circuit diagram shows the ammeter and the voltmeter correctly connected?

A

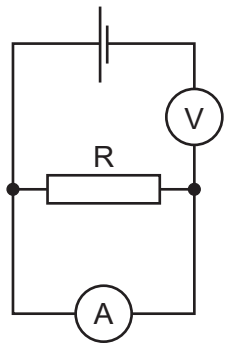

B

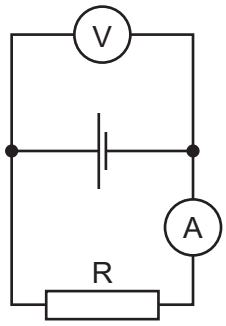

C

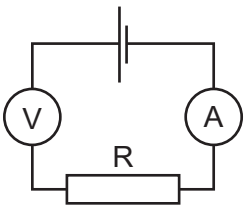

D

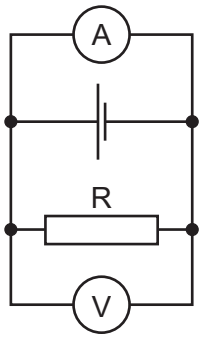

32 The diagram shows a circuit.

View solution

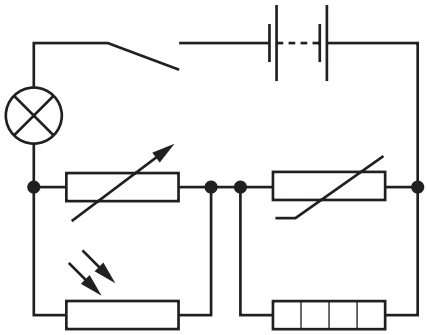

What is connected in parallel with the thermistor?

A heater

B lamp

C light-dependent resistor

D variable resistor

33 The circuit shows a relay being used to operate a mains lamp.

View solution

Two ammeters are labelled P and Q.

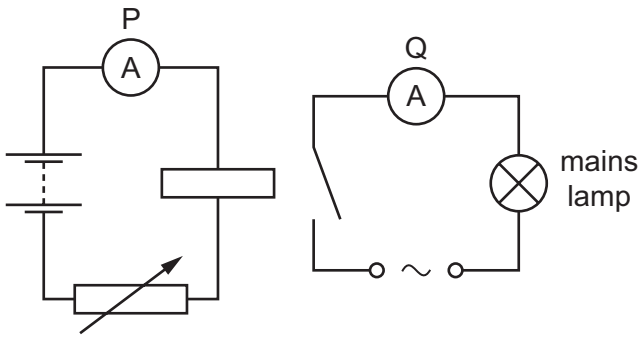

The variable resistor is used to vary the current in the relay coil. The mains lamp switches on when there is a large enough current in the relay coil.

The graph shows how the reading on ammeter Q changes as the reading on ammeter P increases.

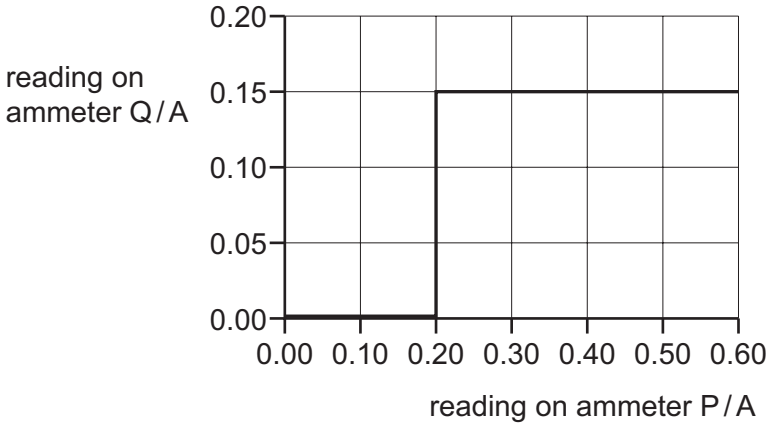

What is the minimum current needed in the relay coil to switch on the mains lamp?

A 0.15 A **B** 0.20 A **C** 0.35 A **D** 0.60 A

© UCLES 2019

34 A lamp is to be connected in a circuit so that the potential difference (p.d.) across it can be varied from 0 to 6 V.

View solution

Which circuit would be most suitable?

A

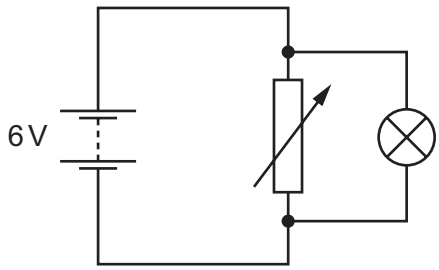

B

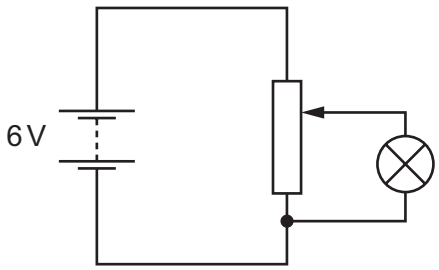

C

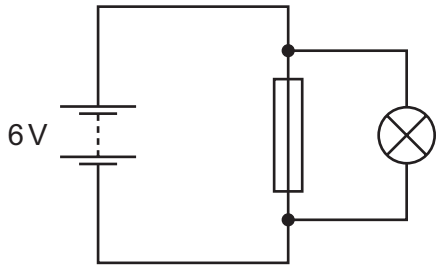

D

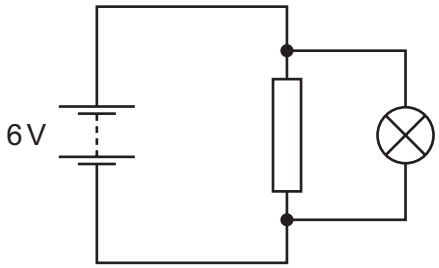

35 Which components are designed to improve the safe working of a mains electrical supply?

View solution

	circuit breaker	earth wire	fuse
A	✓	✓	✗
B	✓	✗	✓
C	✗	✓	✓
D	✓	✓	✓

© UCLES 2019

36 A bar magnet is held near a solenoid. The coil is connected to a galvanometer.

View solution

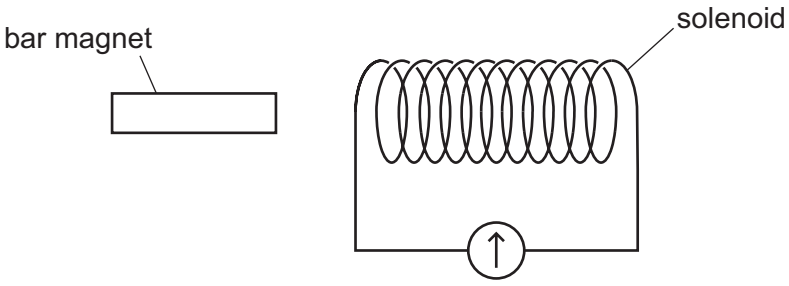

The magnet is moved into the coil of wire and then held stationary inside the coil.

Which graph shows how the induced electromotive force (e.m.f.) varies with time?

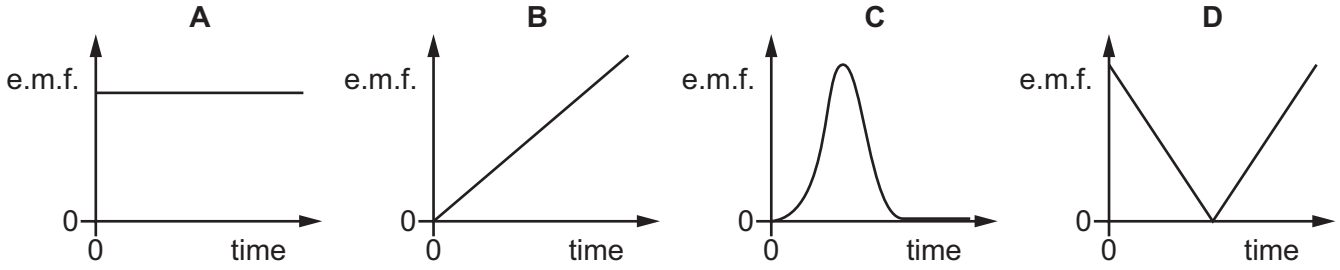

37 A wire XY lies between the poles of a magnet.

View solution

The diagram shows the upward force on the wire XY caused when there is an electric current in the direction XY as shown.

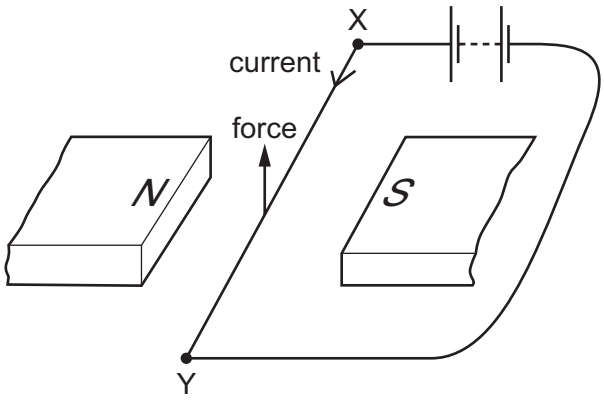

Three tests are made using this apparatus.

1 The current direction is reversed.

2 The N and S poles are swapped around.

3 The current is switched off.

Which will result in **no change** in the size of the force on the wire?

A 1 and 2 only **B** 1 only **C** 2 only **D** 3 only

38 A simple model of the atom consists of small particles orbiting a central nucleus.

View solution

Which row is correct?

	charge on nucleus	charge on orbiting particles
A	negative	negative
B	negative	positive
C	positive	negative
D	positive	positive

39 Which statement explains the meaning of the half-life of a radioactive isotope?

View solution

A half the time taken for one nucleus of the isotope to decay

B half the time taken for the isotope to decay completely

C the time taken for half of the nuclei of the isotope to decay

D the time taken for one nucleus of the isotope to split in half

40 The diagram shows a lead-lined box used for storing radioactive sources.

View solution

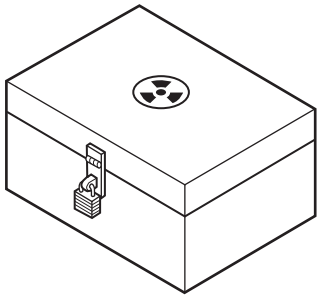

Why is the inside of the box lined with lead?

A It helps the sources to stay radioactive for longer.

B It makes the box heavier.

C It makes the radioactive sources more stable.

D It reduces the amount of radiation that can escape from the box.

Permission to reproduce items where third-party owned material protected by copyright is included has been sought and cleared where possible. Every reasonable effort has been made by the publisher (UCLES) to trace copyright holders, but if any items requiring clearance have unwittingly been included, the publisher will be pleased to make amends at the earliest possible opportunity.

To avoid the issue of disclosure of answer-related information to candidates, all copyright acknowledgements are reproduced online in the Cambridge Assessment International Education Copyright Acknowledgements Booklet. This is produced for each series of examinations and is freely available to download at www.cambridgeinternational.org after the live examination series.

Cambridge Assessment International Education is part of the Cambridge Assessment Group. Cambridge Assessment is the brand name of the University of Cambridge Local Examinations Syndicate (UCLES), which itself is a department of the University of Cambridge.