Cambridge Assessment International Education
Cambridge International General Certificate of Secondary Education

PHYSICS **0625/13**

Paper 1 Multiple Choice (Core) **May/June 2019**

45 minutes

Additional Materials: Multiple Choice Answer Sheet
Soft clean eraser
Soft pencil (type B or HB recommended)

READ THESE INSTRUCTIONS FIRST

Write in soft pencil.
Do not use staples, paper clips, glue or correction fluid.
Write your name, centre number and candidate number on the Answer Sheet in the spaces provided unless this has been done for you.
DO **NOT** WRITE IN ANY BARCODES.

There are **forty** questions on this paper. Answer **all** questions. For each question there are four possible answers **A**, **B**, **C** and **D**.
Choose the **one** you consider correct and record your choice in **soft pencil** on the separate Answer Sheet.

Read the instructions on the Answer Sheet very carefully.

Each correct answer will score one mark. A mark will not be deducted for a wrong answer.
Any rough working should be done in this booklet.
Electronic calculators may be used.
Take the weight of 1.0 kg to be 10 N (acceleration of free fall = 10 m / s^2).

This syllabus is regulated for use in England, Wales and Northern Ireland as a Cambridge International Level 1/Level 2 Certificate.

This document consists of **20** printed pages.

© UCLES 2019

1 The diagram shows a measuring cylinder containing liquid.

View solution

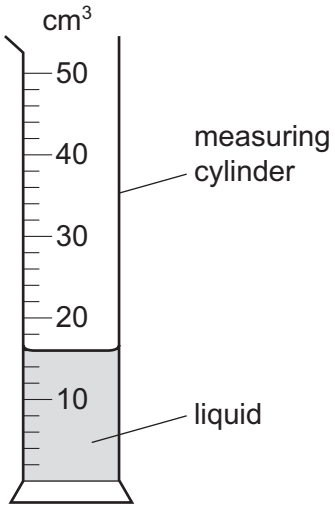

What is the reading for the volume of liquid in the cylinder?

A 13.0 cm^3 **B** 13.5 cm^3 **C** 16.0 cm^3 **D** 17.0 cm^3

2 The diagram shows the speed-time graph for a car.

View solution

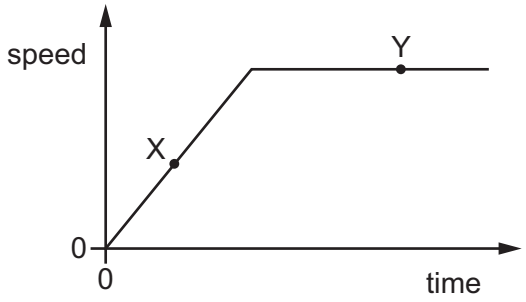

Which row describes the motion of the car at point X and at point Y?

	point X	point Y
A	at rest	moving with constant speed
B	moving with constant speed	at rest
C	moving with changing speed	at rest
D	moving with changing speed	moving with constant speed

© UCLES 2019

3 A heavy metal ball falls vertically downwards through air past four equally spaced levels J, K, L and M.

View solution

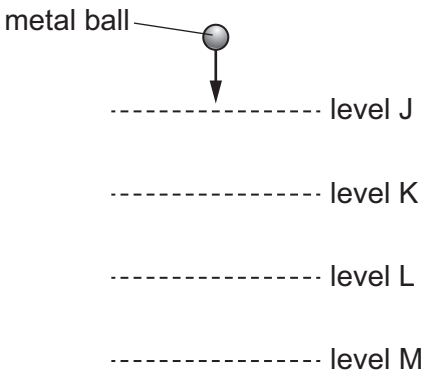

The times taken to fall from one level to the next are measured.

Where is the speed of the ball greatest and which time is shortest?

	speed is greatest between	time is shortest between
A	J and K	J and K
B	J and K	L and M
C	L and M	J and K
D	L and M	L and M

View solution

4 An object which has a mass of 600 kg is on the planet Mars.

The acceleration due to gravity on Mars is $4.0\,m/s^2$.

What is the weight of the object on Mars?

A 60 N **B** 150 N **C** 2400 N **D** 6000 N

View solution

5 Two objects are placed on a balance, one on each side:

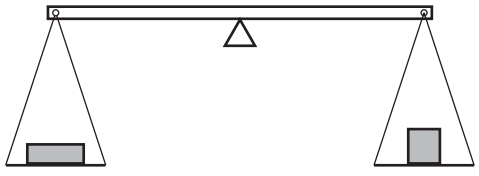

Which properties of the objects can be compared using the balance?

A weight, mass and volume

B weight and mass only

C volume and density

D density only

© UCLES 2019

6 X, Y and Z are three regularly shaped solid objects.

View solution

Their dimensions and masses are shown in the diagrams.

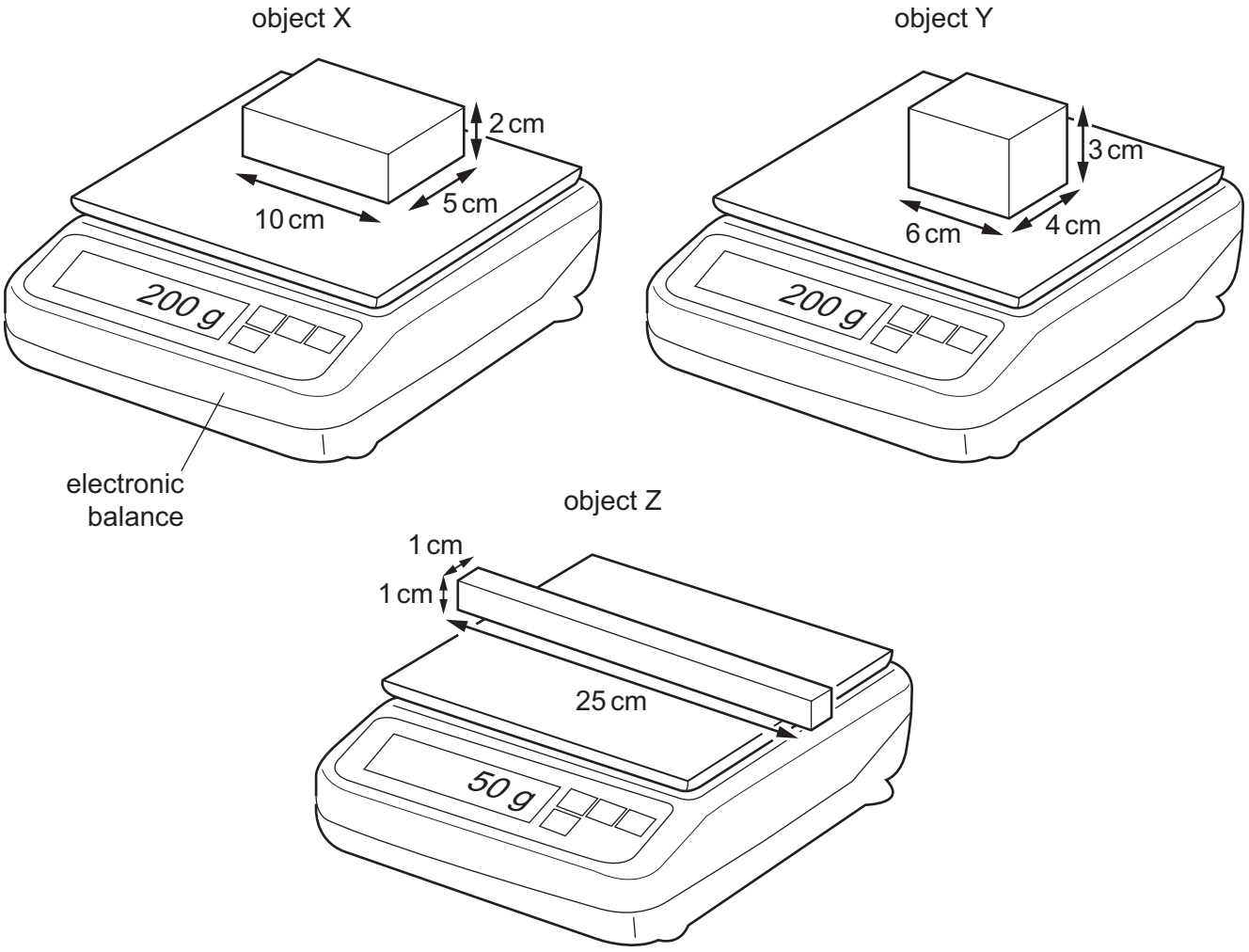

Which objects have the same density?

A X, Y and Z **B** X and Y only **C** X and Z only **D** Y and Z only

7 A car is driven from rest on a long straight road. The car engine exerts a constant driving force.

The diagram shows the horizontal forces acting on the car. The resistive forces are proportional to the speed of the car.

View solution

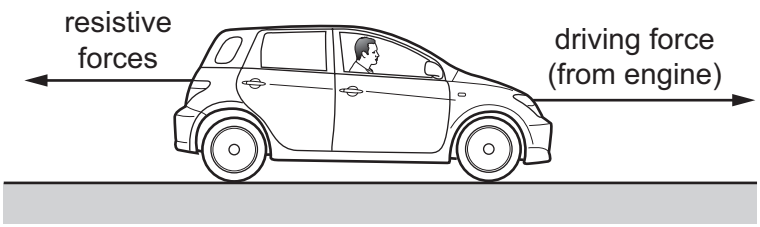

Why does the car eventually reach a maximum speed?

A The resistive forces decrease to make the acceleration of the car negative.

B The resistive forces decrease to make the acceleration of the car zero.

C The resistive forces increase to make the acceleration of the car negative.

D The resistive forces increase to make the acceleration of the car zero.

© UCLES 2019

8 A spring is suspended from a stand. Loads are added and the extensions are measured.

View solution

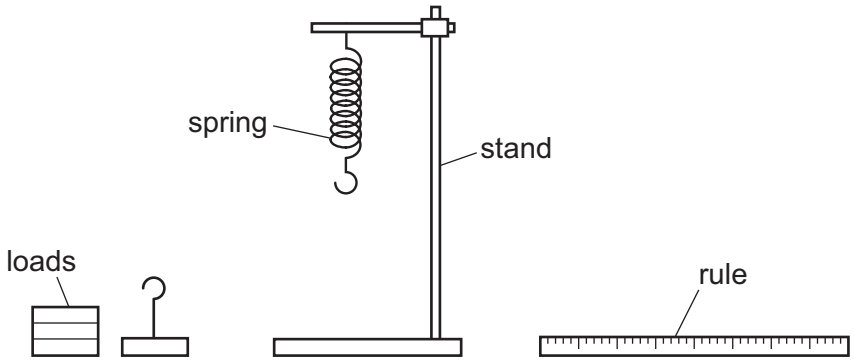

Which graph shows the result of plotting extension against load?

A

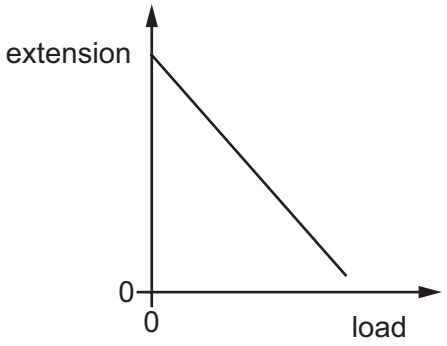

B

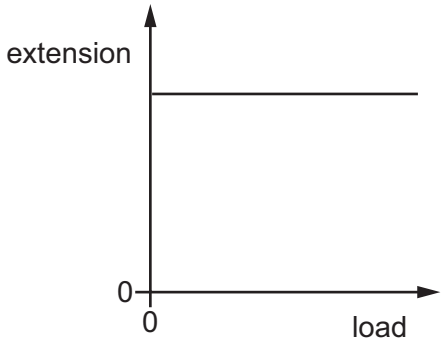

C

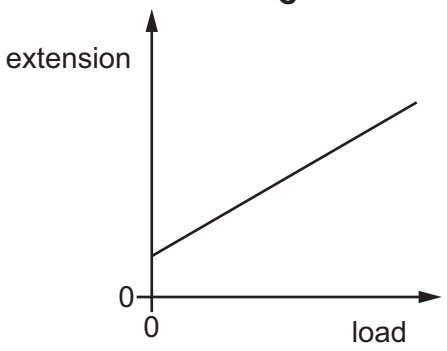

D

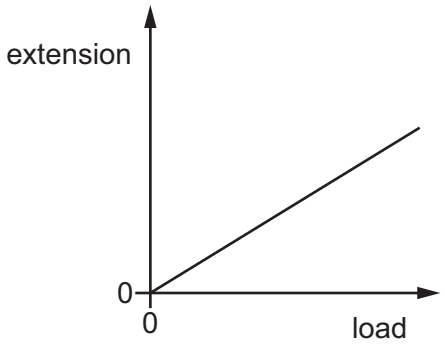

© UCLES 2019

9 A wooden bar is pivoted at its centre so that it can rotate freely. Two equal forces *F* are applied to the bar.

View solution

In which diagram is the turning effect greatest?

A

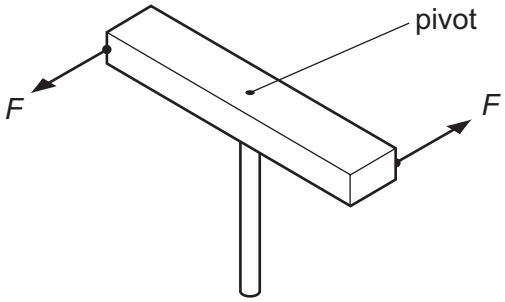

B

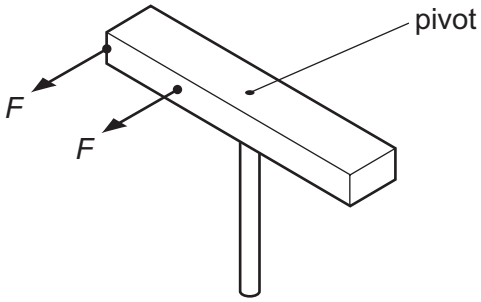

C

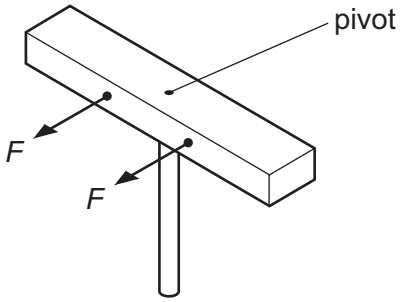

D

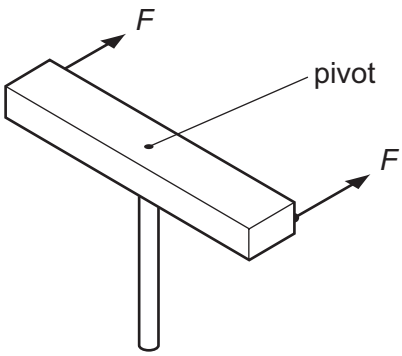

View solution

10 A machine is very efficient.

What does this mean?

A It produces a large amount of power.

B It uses very little energy.

C It wastes very little energy.

D It works very quickly.

View solution

11 A body is lifted against gravity.

Which equation shows the work done on the body?

A work done = change in distance moved by the body

B work done = change in energy of the body

C work done = change in force on the body

D work done = change in power of the body

© UCLES 2019

12 The diagram shows a simple mercury barometer.

View solution

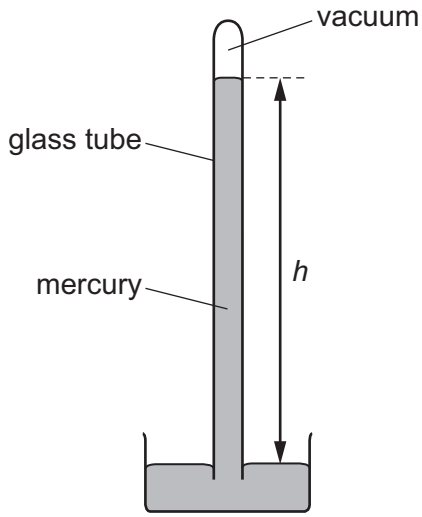

A change is made and the vertical height *h* of the column increases.

Which change causes this increase?

A A liquid with a lower density than mercury has been used.

B Atmospheric pressure decreases.

C A narrower glass tube is used.

D The glass tube is tilted.

13 The diagram shows a stone suspended on a string under the surface of a liquid. The stone experiences a pressure caused by the liquid.

View solution

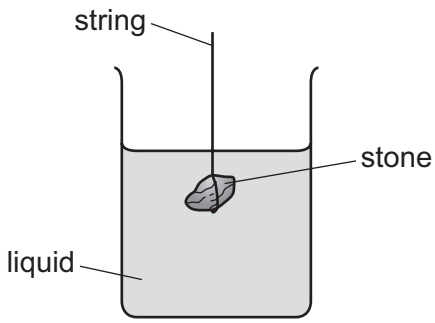

What would increase the pressure on the stone?

A decreasing the surface area of the stone

B increasing the mass of the stone

C lowering the stone deeper into the liquid

D using a liquid with a lower density

© UCLES 2019

14 Which statement is correct?

View solution

A A solid can flow.

B A solid can be compressed easily.

C A solid has a fixed shape.

D A solid takes the shape of its container.

15 On a hot summer day, the level of the water in a pond falls.

View solution

Which statement explains this?

A The least energetic water molecules escape from the surface and do not return.

B The least energetic water molecules escape from the surface and then return.

C The most energetic water molecules escape from the surface and do not return.

D The most energetic water molecules escape from the surface and then return.

16 Here are three statements about a liquid-in-glass thermometer with a Celsius scale.

View solution

1 The lower fixed point is the temperature at which pure water freezes.

2 The upper fixed point is the temperature at which pure water boils.

3 A scale is made by dividing the distance between the fixed points into equal divisions.

Which statements are correct?

A 1 and 2 only **B** 2 and 3 only **C** 1 and 3 only **D** 1, 2 and 3

© UCLES 2019

17 A night storage heater contains a large block of material that is heated electrically during the night. During the day the block cools down, releasing thermal energy into the room.

View solution

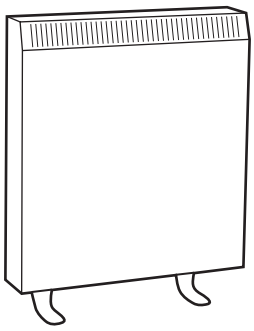

Which thermal capacity and which night-time temperature increase will cause the most energy to be stored by the block?

	thermal capacity of block	night-time temperature increase
A	large	large
B	large	small
C	small	large
D	small	small

18 A student investigates the melting point of a pure substance. She heats the substance slowly and takes readings of its temperature as the substance starts to melt and when it finishes melting.

View solution

Which statement is correct?

A The temperature decreases slightly as the substance melts.

B The temperature fluctuates as the substance melts.

C The temperature increases as the substance melts.

D The temperature stays the same as the substance melts.

19 A person holds an empty glass beaker and pours hot water into it.

View solution

Why does it take a few seconds before his hand starts to feel hot?

A Glass is a poor conductor of heat.

B Water is a poor conductor of heat.

C Glass is a better conductor of heat than water.

D Water is a better conductor of heat than glass.

© UCLES 2019

20 The metal surface of a kettle is hot.

View solution

What happens to the cool air outside the kettle when it comes into contact with the hot kettle?

A The density of the air decreases and the air falls.

B The density of the air decreases and the air rises.

C The density of the air increases and the air falls.

D The density of the air increases and the air rises.

21 A student draws a diagram to show two different properties of a water wave. The arrows show the wave directions.

View solution

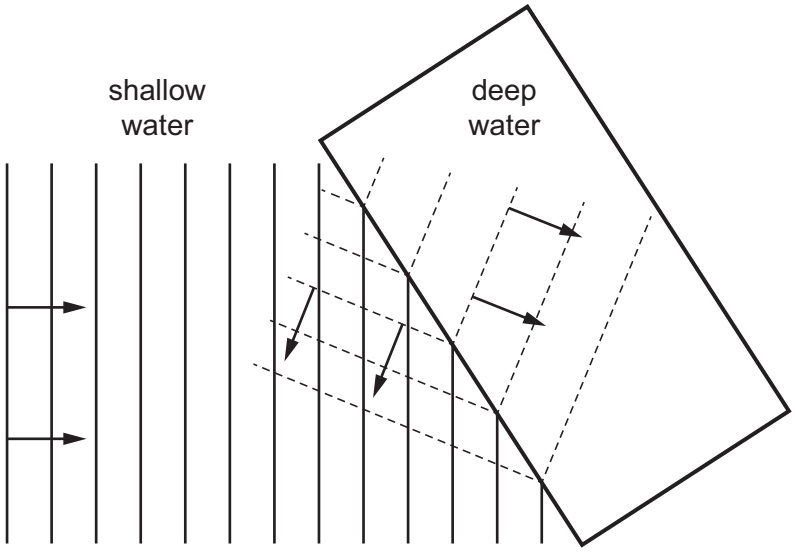

Which two wave properties does the diagram show?

A refraction and diffraction

B reflection and dispersion

C reflection and diffraction

D reflection and refraction

© UCLES 2019

22 The diagram shows a cork with a weight attached so that the cork floats upright in water.

View solution

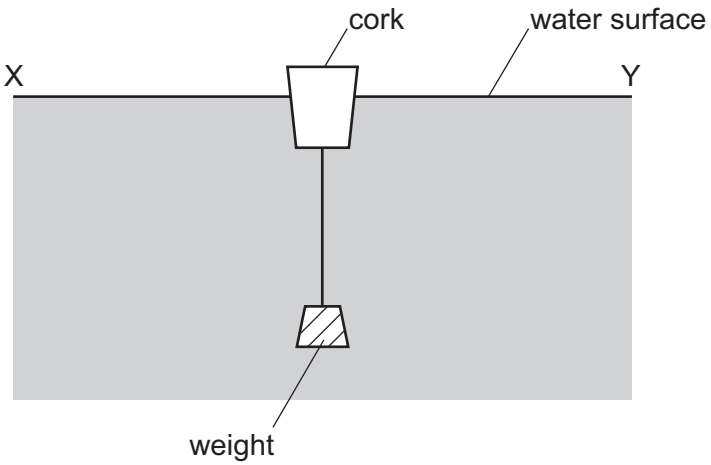

Transverse waves travel across the water from X to Y.

In which direction do the waves make the cork move?

A $\rightarrow \leftarrow$ right and left

B $\uparrow\downarrow$ up and down

C $\rightarrow$ only to the right

D $\leftarrow$ only to the left

23 A student draws a ray diagram to show how a ray of light is reflected by a number of mirrors.

View solution

Which reflection has **not** been drawn correctly?

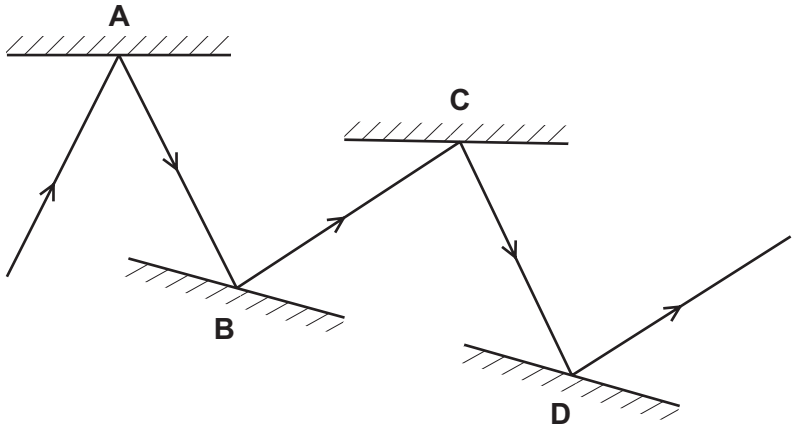

24 Light passes through a glass block.

What is the path of the light?

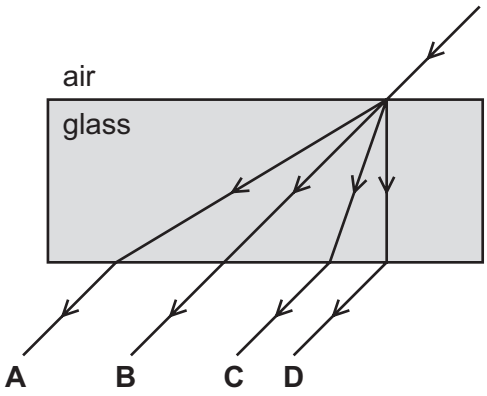

25 The diagram shows radiation from a lamp passing through a prism.

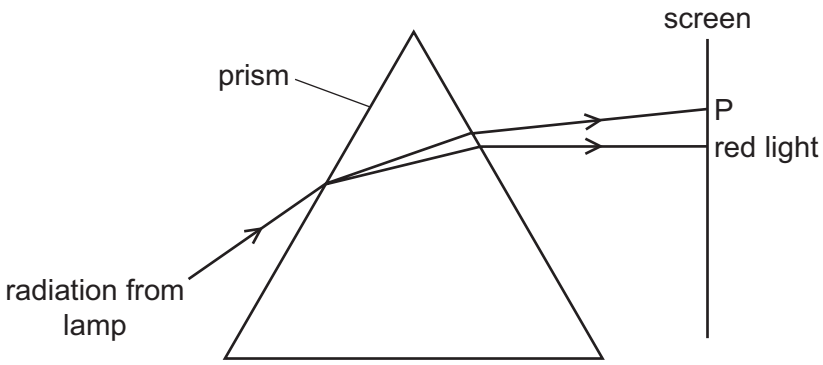

Which type of radiation is found at P?

A γ-rays

B infrared

C ultraviolet

D X-rays

26 A pulse of sound is produced at the bottom of a boat. The sound travels through the water and is reflected from a shoal of fish. The sound reaches the boat again after 1.2 s. The speed of sound in the water is 1500 m / s.

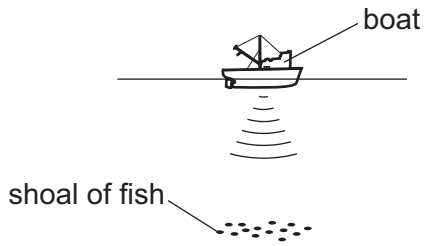

How far below the bottom of the boat is the shoal of fish?

A 450 m **B** 900 m **C** 1800 m **D** 3600 m

27 Which statement about ultrasound is correct?

View solution

A It has a higher frequency than audible sound, and it is a longitudinal wave.

B It has a higher frequency than audible sound, and it is a transverse wave.

C It has a lower frequency than audible sound, and it is a longitudinal wave.

D It has a lower frequency than audible sound, and it is a transverse wave.

28 A metal bar is placed inside a current-carrying coil, as shown in diagram 1.

View solution

There is a small current in the coil. The bar holds a few nails, as shown in diagram 2.

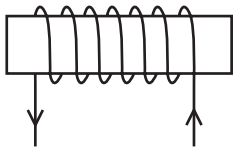

diagram 1

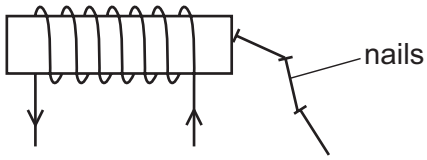

diagram 2

When there is no current in the coil, the nails drop off.

Which row is correct?

	metal from which the bar is made	effect of a larger current in the coil
A	soft iron	it makes no difference
B	soft iron	the bar holds more nails
C	steel	it makes no difference
D	steel	the bar holds more nails

© UCLES 2019

29 An iron ball on a horizontal wooden table rolls near the north pole of a bar magnet which is lying on the table.

View solution

Which diagram shows the most likely path of the ball, as seen from above the table?

A

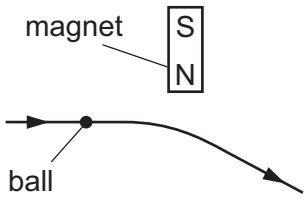

B

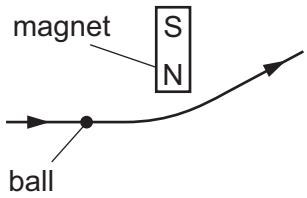

C

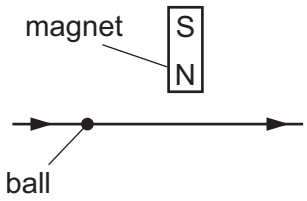

D

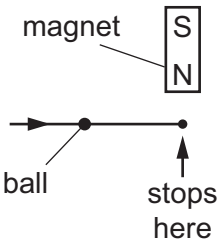

30 Diagram 1 shows two thin, uncharged strips of plastic.

View solution

Diagram 2 shows the same strips after they have been rubbed with a dry cloth.

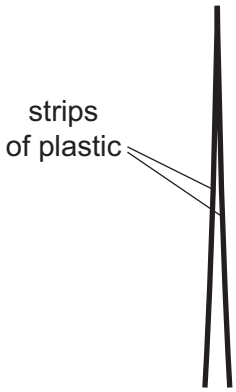

diagram 1

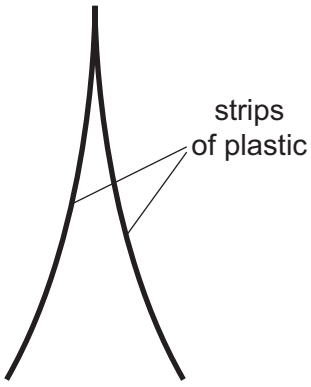

diagram 2

Which row describes the charge on the strips after rubbing, and the force between the strips after rubbing?

	charge on strips	force between strips
A	opposite	attraction
B	opposite	repulsion
C	the same	attraction
D	the same	repulsion

© UCLES 2019

31 A battery stores chemical potential energy. The battery is connected to a resistor.

View solution

As the battery runs down, what happens to its chemical energy?

	The energy is transferred by	and ends up as
A	electrical working	internal energy in the resistor
B	electrical working	potential energy in the resistor
C	mechanical working	internal energy in the resistor
D	mechanical working	potential energy in the resistor

32 The diagram shows a circuit including a lamp, an electric bell and three switches S_1, S_2 and S_3.

View solution

The lamp and bell are not faulty.

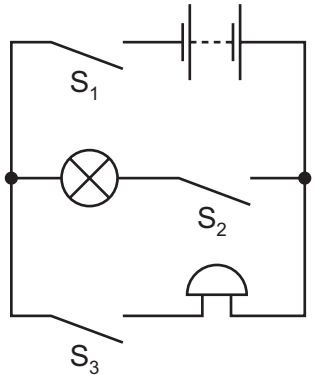

The bell is ringing but the lamp is not lit.

Which switches are closed?

A S_1 only

B S_1 and S_2 only

C S_1 and S_3 only

D S_1, S_2 and S_3

© UCLES 2019

33 A student is designing a lighting circuit for a dolls' house. He sets up two different circuits.

View solution

Each circuit contains a 12 V power supply and three identical lamps.

Each lamp is designed to operate at normal brightness when connected individually to a 12 V supply.

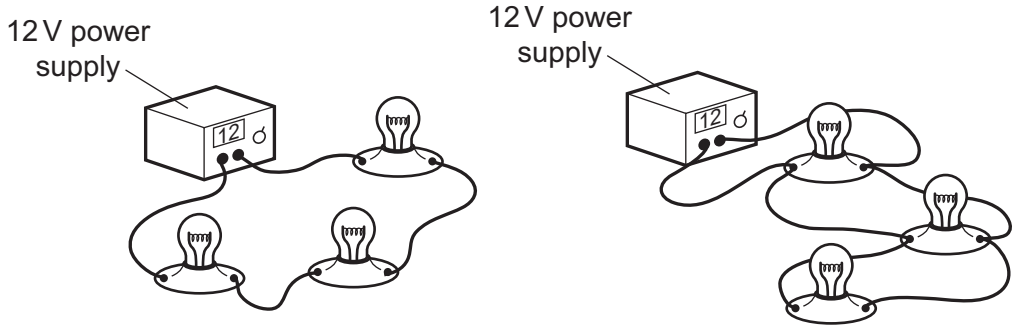

circuit 1 circuit 2

Which statement is correct?

A In circuit 1, each of the lamps is at normal brightness.

B In circuit 1, if one lamp fails, the other lamps remain lit.

C In circuit 2, if one lamp fails, the other lamps remain lit.

D In circuit 2, the current from the power supply is less than in circuit 1.

34 A lamp is to be connected in a circuit so that the potential difference (p.d.) across it can be varied from 0 to 6 V.

View solution

Which circuit would be most suitable?

A

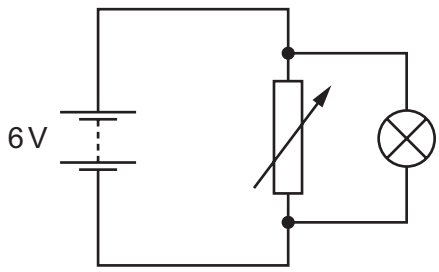

B

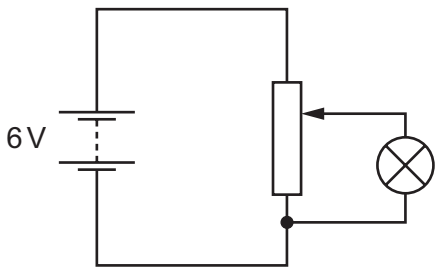

C

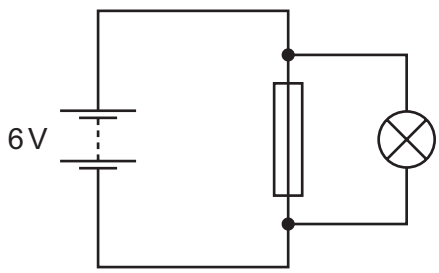

D

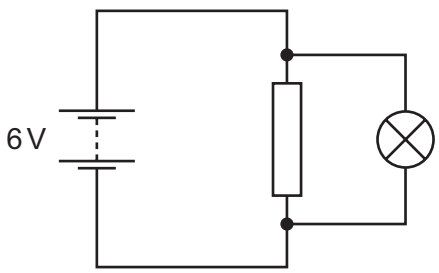

© UCLES 2019

35 A simple wiring diagram for an electric cooker is shown.

View solution

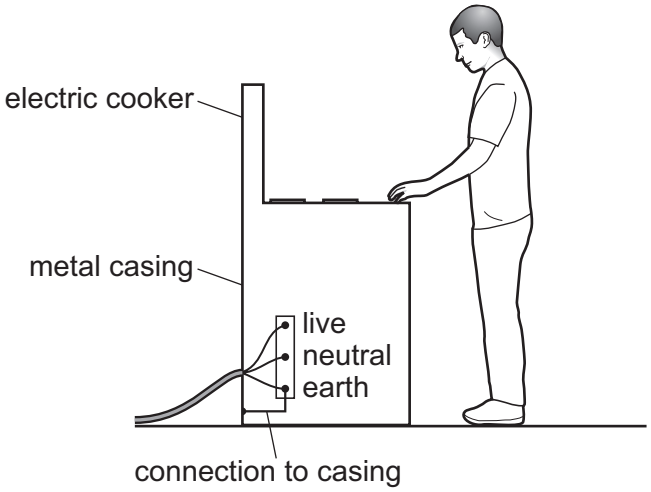

Why is there a wire connecting the metal case of the cooker to earth?

A It improves the efficiency of the cooker.

B It prevents the metal case from becoming too hot when the cooker is left on.

C It reduces the risk of an electric shock if the live wire touches the metal case.

D The electric cooker will not switch on without it.

© UCLES 2019

36 In an experiment, a wire is held above a compass needle as shown.

View solution

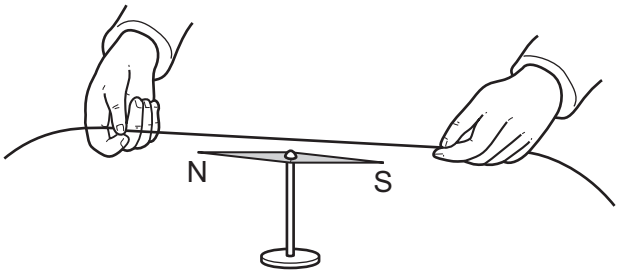

An electric current is switched on in the wire and the compass needle is deflected.

Which row explains why this happens and then describes what happens when the current is reversed?

	why this happens	what happens when the current is reversed
A	there is a magnetic field inside the wire	the compass needle deflects in the opposite direction
B	there is a magnetic field inside the wire	there is no effect on the compass needle
C	there is a magnetic field around the wire	the compass needle deflects in the opposite direction
D	there is a magnetic field around the wire	there is no effect on the compass needle

37 Which device relies upon the magnetic effect of an electric current?

View solution

A fuse

B relay

C thermistor

D variable resistor

38 Which statement about the structure of an atom is correct?

View solution

A It contains positively charged particles only.

B It contains negatively charged particles only.

C It contains no charged particles.

D It contains positively charged particles and negatively charged particles.

© UCLES 2019

39 Which statement about γ-radiation is correct?

View solution

A It consists of very small charged particles.

B It is a form of electromagnetic radiation.

C It is less penetrating than β-radiation.

D It is more highly ionising than α-radiation.

40 A radioactive element undergoes α-decay.

View solution

Which statement is **not** correct?

A A different element is formed.

B Radiation is emitted from the nucleus.

C The decay is a random process.

D The number of particles in the nucleus stays the same.

Permission to reproduce items where third-party owned material protected by copyright is included has been sought and cleared where possible. Every reasonable effort has been made by the publisher (UCLES) to trace copyright holders, but if any items requiring clearance have unwittingly been included, the publisher will be pleased to make amends at the earliest possible opportunity.

To avoid the issue of disclosure of answer-related information to candidates, all copyright acknowledgements are reproduced online in the Cambridge Assessment International Education Copyright Acknowledgements Booklet. This is produced for each series of examinations and is freely available to download at www.cambridgeinternational.org after the live examination series.

Cambridge Assessment International Education is part of the Cambridge Assessment Group. Cambridge Assessment is the brand name of the University of Cambridge Local Examinations Syndicate (UCLES), which itself is a department of the University of Cambridge.

© UCLES 2019