Cambridge Assessment International Education
Cambridge International General Certificate of Secondary Education

PHYSICS **0625/22**

Paper 2 Multiple Choice (Extended) **May/June 2019**

45 minutes

Additional Materials: Multiple Choice Answer Sheet
Soft clean eraser
Soft pencil (type B or HB recommended)

READ THESE INSTRUCTIONS FIRST

Write in soft pencil.
Do not use staples, paper clips, glue or correction fluid.
Write your name, centre number and candidate number on the Answer Sheet in the spaces provided unless this has been done for you.
DO **NOT** WRITE IN ANY BARCODES.

There are **forty** questions on this paper. Answer **all** questions. For each question there are four possible answers **A**, **B**, **C** and **D**.
Choose the **one** you consider correct and record your choice in **soft pencil** on the separate Answer Sheet.

Read the instructions on the Answer Sheet very carefully.

Each correct answer will score one mark. A mark will not be deducted for a wrong answer.
Any rough working should be done in this booklet.
Electronic calculators may be used.
Take the weight of 1.0 kg to be 10 N (acceleration of free fall = 10 m / s^2).

This syllabus is regulated for use in England, Wales and Northern Ireland as a Cambridge International Level 1/Level 2 Certificate.

This document consists of **16** printed pages.

© UCLES 2019

Cambridge Assessment International Education

1 Which quantity can be measured directly using a micrometer screw gauge?

View solution

A the area of a sheet of paper

B the mass of a sheet of paper

C the thickness of a sheet of paper

D the volume of a sheet of paper

2 Four objects are moving along a straight line.

View solution

The distance of an object from a fixed point on the line is plotted against time for each object.

Which object is decelerating?

A

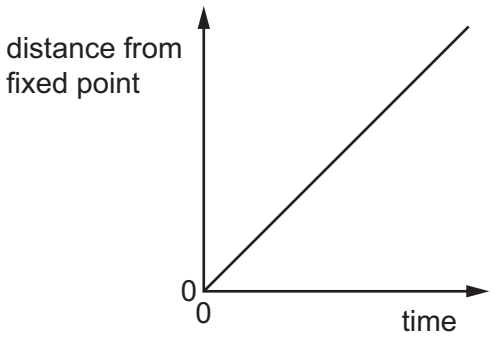

B

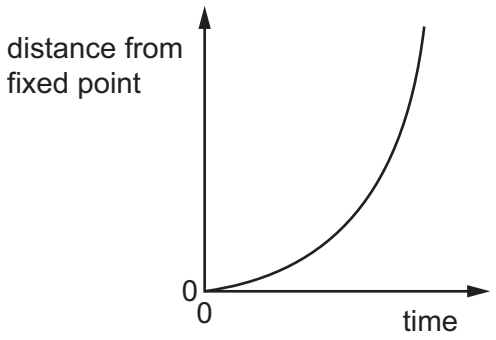

C

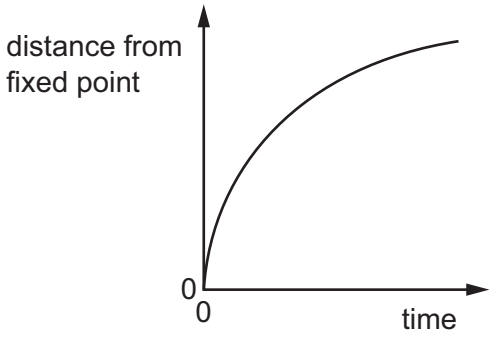

D

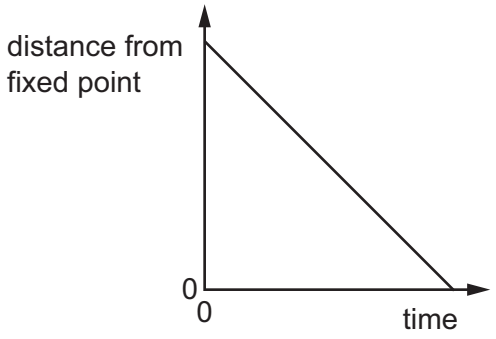

3 A heavy metal ball falls vertically downwards through air past four equally spaced levels J, K, L and M.

View solution

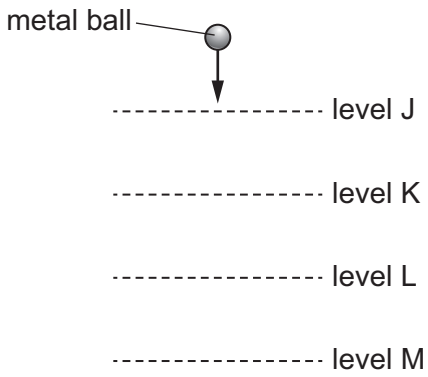

The times taken to fall from one level to the next are measured.

Where is the speed of the ball greatest and which time is shortest?

	speed is greatest between	time is shortest between
A	J and K	J and K
B	J and K	L and M
C	L and M	J and K
D	L and M	L and M

4 Four students make statements about the mass of an object.

View solution

Which statement is correct?

A The mass of an object depends on the gravitational field which acts on the object.

B The mass of an object divided by its weight is equal to the acceleration with which it falls freely.

C The mass of an object increases when the temperature of the object increases.

D The mass of an object resists change in motion of the object.

5 A metal has a density of $8.0\,g/cm^3$. A solid cube of mass 1.0 kg is made from this metal.

View solution

How long is each side of the cube?

A 0.50 cm **B** 2.0 cm **C** 5.0 cm **D** 42 cm

© UCLES 2019

6 An experiment is carried out to determine the spring constant for a spring.

View solution

Different loads are hung from the spring and its length is measured for each different load.

The graph shows how its length varies with load.

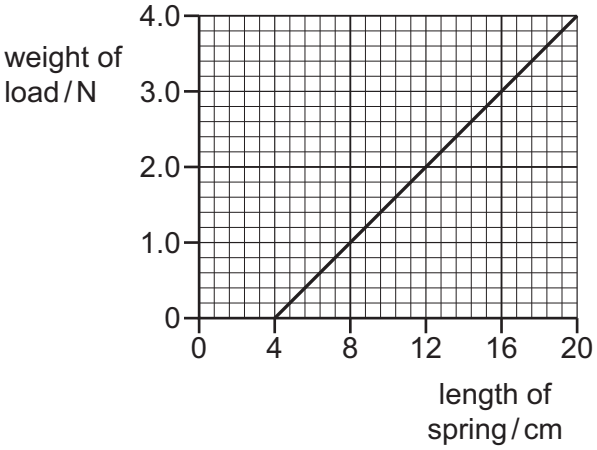

What is the value of the spring constant?

A 0.20 N / cm **B** 0.25 N / cm **C** 4.0 N / cm **D** 5.0 N / cm

7 A beam is pivoted at its centre of mass.

View solution

It is acted upon by two forces, 10 N and 5.0 N, as shown.

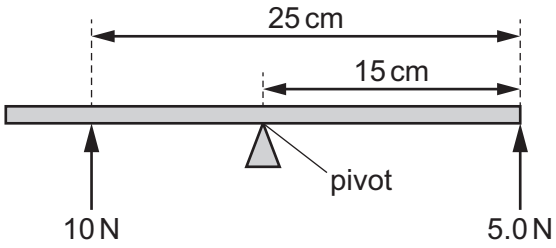

What is the resultant moment about the pivot?

A 25 N cm anticlockwise

B 25 N cm clockwise

C 175 N cm anticlockwise

D 175 N cm clockwise

© UCLES 2019

8 Which object is in equilibrium?

View solution

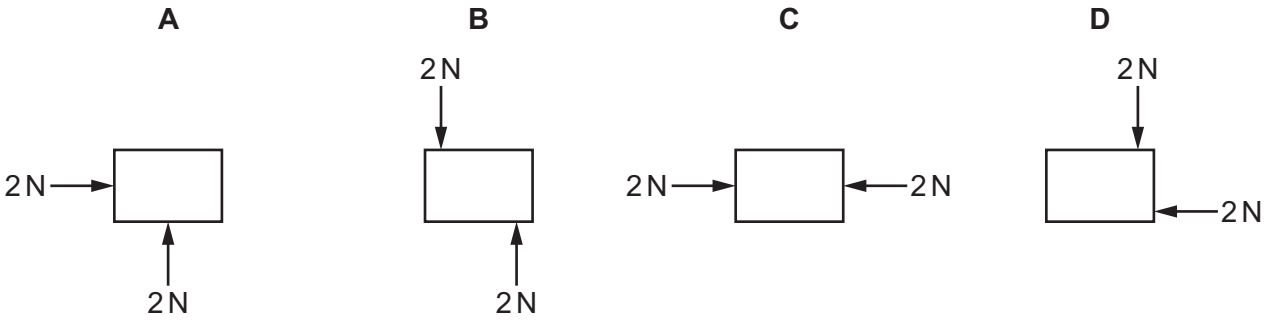

9 An object of mass 4.0 kg is moving with a velocity of 3.0 m / s in a straight line.

View solution

What is the momentum of the object?

A 0.75 kg m / s **B** 1.3 kg m / s **C** 12 kg m / s **D** 24 kg m / s

10 A machine is very efficient.

View solution

What does this mean?

A It produces a large amount of power.

B It uses very little energy.

C It wastes very little energy.

D It works very quickly.

11 A force F acts on a body and the body moves a distance d in the direction of the force.

View solution

Which expression for the work done W is correct?

A $W = Fd$ **B** $W = Fd^2$ **C** $W = \frac{1}{2}Fd$ **D** $W = \frac{1}{2}Fd^2$

12 A boy produces an average power output of 60 W as he rides his bicycle for 2.0 minutes.

View solution

How much useful energy does he expend?

A 0.50 J **B** 30 J **C** 120 J **D** 7200 J

© UCLES 2019

13 The diagram shows a stone suspended on a string under the surface of a liquid. The stone experiences a pressure caused by the liquid.

View solution

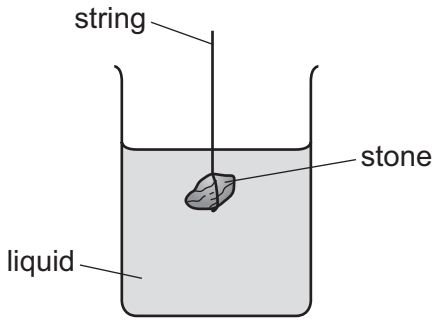

What would increase the pressure on the stone?

A decreasing the surface area of the stone

B increasing the mass of the stone

C lowering the stone deeper into the liquid

D using a liquid with a lower density

14 At room temperature, iron is difficult to compress.

View solution

At the same temperature, oxygen is much easier to compress.

Which comparison of the structures of iron and oxygen explains this?

A The iron particles are closer together.

B The iron particles have a greater mass.

C The iron particles can be magnetised.

D The iron particles have less average kinetic energy.

© UCLES 2019

15 A night storage heater contains a large block of material that is heated electrically during the night. During the day the block cools down, releasing thermal energy into the room.

View solution

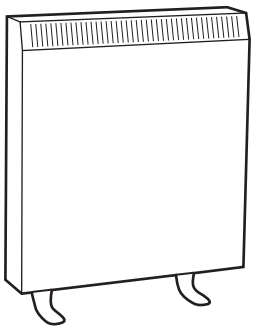

Which thermal capacity and which night-time temperature increase will cause the most energy to be stored by the block?

	thermal capacity of block	night-time temperature increase
A	large	large
B	large	small
C	small	large
D	small	small

16 100 g of water at 25 °C is poured into an insulated cup. 50 g of ice at 0 °C is added to the water. The water is stirred until the temperature of the water has fallen to 0 °C.

View solution

18 g of ice remains unmelted.

The specific heat capacity of water is 4.2 J / g °C.

Which value does this experiment give for the specific latent heat of fusion of ice?

A 210 J / g **B** 330 J / g **C** 580 J / g **D** 770 J / g

17 The handle of a metal saucepan is made of plastic. As the saucepan heats up, the handle gets warmer.

View solution

Which statement explains this?

A Molecules of the plastic radiate their energy to other molecules.

B Molecules of the plastic vibrate more and pass on their energy to nearby molecules.

C The free electrons in the plastic transfer the thermal energy along the handle.

D The heated molecules very slowly move along the plastic handle.

© UCLES 2019

18 The metal surface of a kettle is hot.

What happens to the cool air outside the kettle when it comes into contact with the hot kettle?

A The density of the air decreases and the air falls.

B The density of the air decreases and the air rises.

C The density of the air increases and the air falls.

D The density of the air increases and the air rises.

19 Vacuum flasks usually have silvered walls that help to keep the contents of the flask hot.

Why are the walls silvered?

A to absorb thermal energy from the air around the flask

B to increase the rate of convection inside the flask

C to reduce energy loss to the surroundings by conduction

D to reflect thermal radiation back into the flask

20 When water waves pass through a gap they diffract.

The diagrams show wavefronts approaching a narrow gap.

In which diagram will the diffraction be least?

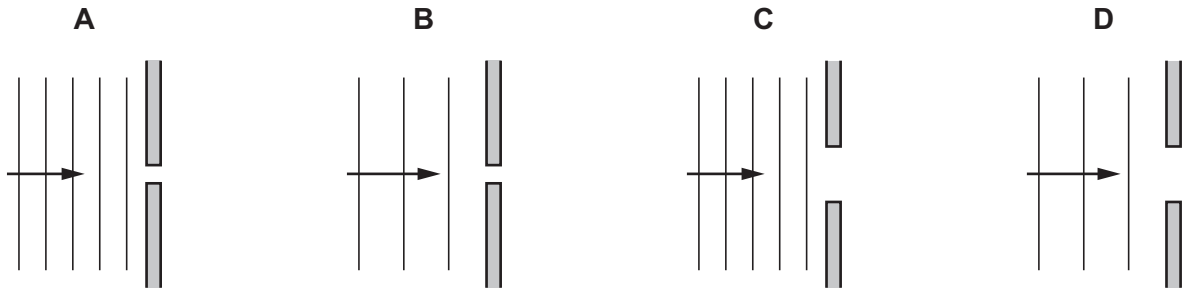

21 Which conditions are necessary for light to be totally internally reflected?

	the incident light is in	angle of incidence
A	the less dense medium	less than the critical angle
B	the less dense medium	greater than the critical angle
C	the more dense medium	less than the critical angle
D	the more dense medium	greater than the critical angle

© UCLES 2019

22 Light is travelling through air. It strikes a glass block at an angle of incidence of 45°. The glass has a refractive index of 1.4.

View solution

What is the angle of refraction of the light as it enters the glass?

A 29° **B** 30° **C** 32° **D** 82°

23 An eclipse of the Sun happens when the Moon comes between the Earth and the Sun.

View solution

Which statement is correct?

A Infra-red radiation from the Sun disappears before visible light and ultra-violet radiation.

B Ultra-violet radiation from the Sun disappears before visible light and infra-red radiation.

C Visible light from the Sun disappears before ultra-violet radiation and infra-red radiation.

D Infra-red radiation, ultra-violet radiation and visible light from the Sun all disappear at the same moment.

24 A pulse of sound is produced at the bottom of a boat. The sound travels through the water and is reflected from a shoal of fish. The sound reaches the boat again after 1.2 s. The speed of sound in the water is 1500 m / s.

View solution

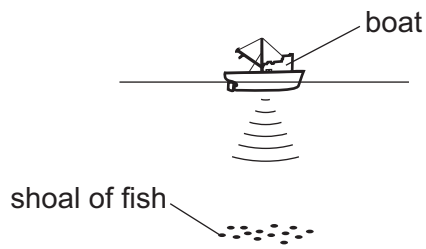

How far below the bottom of the boat is the shoal of fish?

A 450 m **B** 900 m **C** 1800 m **D** 3600 m

25 An observer stands at the finish line of a 100 m race. He wants to time the winner's run. He starts his stop-watch as soon as he sees the smoke from the starting gun instead of when he hears the bang.

View solution

What is the reason for doing this?

A Light travels much faster than sound.

B There is a risk he might respond to an echo from a wall.

C Humans react slower to sound than to light.

D Humans react more quickly to sound than to light.

© UCLES 2019

26 A soft iron bar is a long way from any magnetic field.

View solution

How can the material of the bar be described?

A It is magnetic and strongly magnetised.

B It is magnetic and unmagnetised.

C It is non-magnetic and strongly magnetised.

D It is non-magnetic and unmagnetised.

27 Diagram 1 shows two thin, uncharged strips of plastic.

View solution

Diagram 2 shows the same strips after they have been rubbed with a dry cloth.

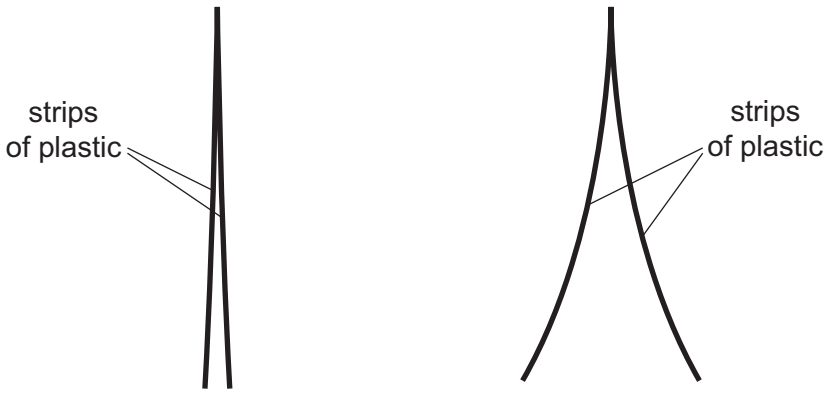

diagram 1 diagram 2

Which row describes the charge on the strips after rubbing, and the force between the strips after rubbing?

	charge on strips	force between strips
A	opposite	attraction
B	opposite	repulsion
C	the same	attraction
D	the same	repulsion

28 A cell has an electromotive force (e.m.f.) of 1.5 V.

View solution

What does this statement mean?

A The cell converts 1.0 J of energy when driving 1.5 C of charge round a complete circuit.

B The cell converts 1.5 J of energy when driving 1.0 C of charge round a complete circuit.

C The cell converts 1.5 J of energy per second when driving 1.0 C of charge round a complete circuit.

D The cell converts 1.5 W of power when driving 1.0 C of charge round a complete circuit.

© UCLES 2019

29 A metal wire of length 100 cm and cross-sectional area 0.20 mm^2 has a resistance of 8.0 Ω.

What is the resistance of a wire of the same metal of length 50 cm and cross-sectional area of 0.40 mm^2?

View solution

A 2.0 Ω **B** 8.0 Ω **C** 16 Ω **D** 32 Ω

30 The diagram shows a circuit.

View solution

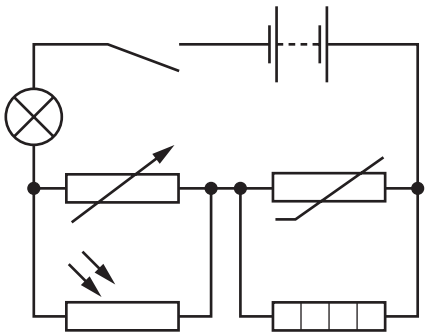

What is connected in parallel with the thermistor?

A heater

B lamp

C light-dependent resistor

D variable resistor

© UCLES 2019

31 A lamp is to be connected in a circuit so that the potential difference (p.d.) across it can be varied from 0 to 6 V.

View solution

Which circuit would be most suitable?

A

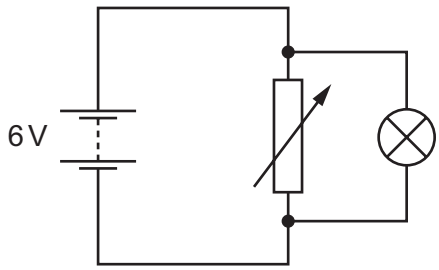

B

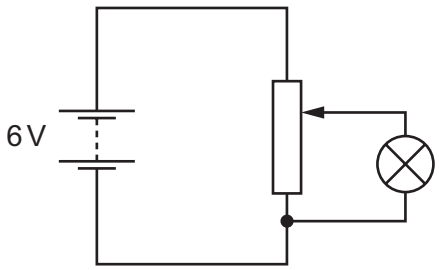

C

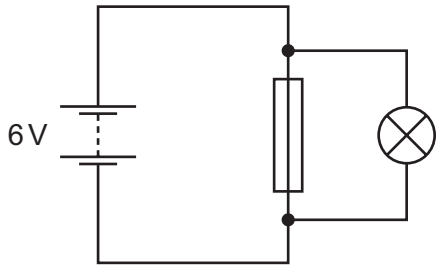

D

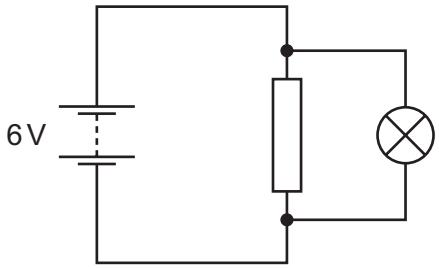

32 The circuit below can be completed by inserting components at X and at Y. The completed circuit is a potential divider in which the potential difference across component Y increases when the temperature increases.

View solution

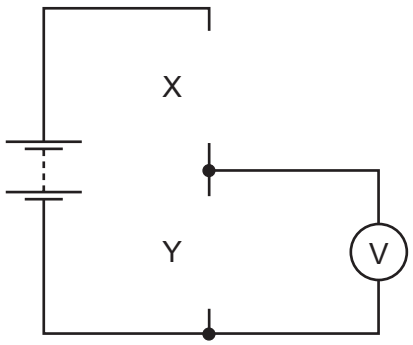

Which row shows the components X and Y?

	X	Y
A	light-dependent resistor	resistor
B	resistor	light-dependent resistor
C	resistor	thermistor
D	thermistor	resistor

© UCLES 2019

33 Which two logic gates each have a high output (1) when both of their inputs are low (0)?

View solution

A AND and OR

B AND and NOR

C NAND and NOR

D NAND and OR

34 Two NAND gates are joined together as shown.

View solution

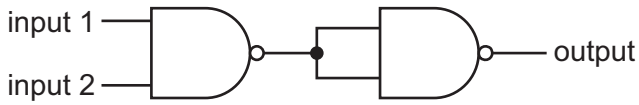

Which single logic gate is equivalent to this combination?

A AND **B** NAND **C** NOR **D** OR

35 Which components are designed to improve the safe working of a mains electrical supply?

View solution

	circuit breaker	earth wire	fuse
A	✓	✓	✗
B	✓	✗	✓
C	✗	✓	✓
D	✓	✓	✓

© UCLES 2019

36 The diagram shows a current-carrying wire placed between two magnetic poles. The current is in the direction shown.

View solution

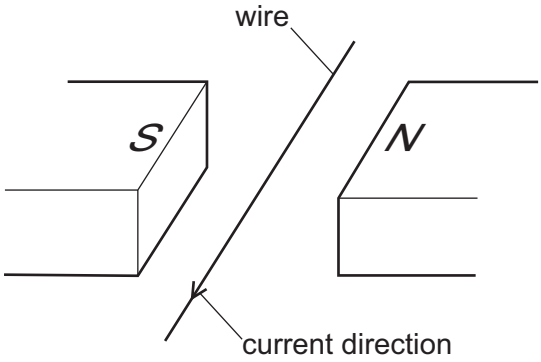

What is the direction of the force on the wire?

A towards the bottom of the page

B towards the top of the page

C towards the left-hand side of the page

D towards the right-hand side of the page

© UCLES 2019

37 Diagram 1 shows an a.c. generator. The coil is turning as shown.

View solution

diagram 1

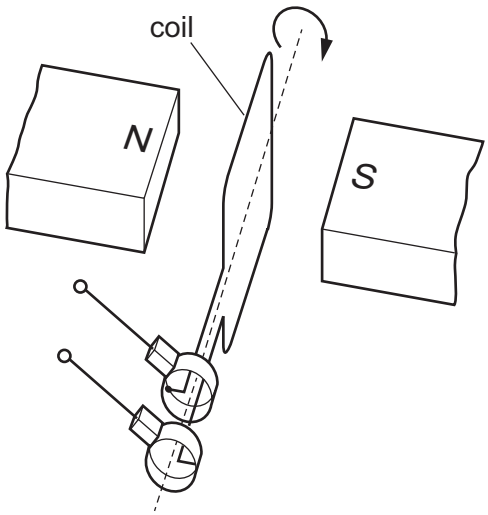

Diagram 2 shows the output voltage produced by the generator as the coil turns.

Which point on diagram 2 shows the voltage induced when the coil is moving through the position shown in diagram 1?

diagram 2

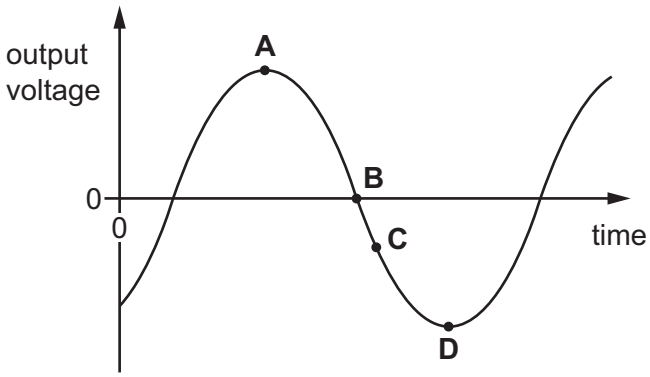

38 Which observation provides evidence for the nuclear atom?

View solution

A attraction of opposite charges

B emission of γ-rays during the decay of a radioactive nuclide

C scattering of α-particles by thin metal foils

D scattering of γ-rays by a thin metal foil

© UCLES 2019

39 The chemical symbol for uranium is U. The equation represents the radioactive decay of uranium-235.

View solution

$$^{235}_{92}U \rightarrow {}^{x}_{y}Th + {}^{4}_{2}He$$

What are the numbers x and y?

	x	y
A	231	94
B	231	90
C	239	94
D	239	90

40 An experiment is carried out to measure the radiation from a radioactive source that has a half-life of 10 minutes.

View solution

The source is placed close to a detector that is connected to a counter, as shown.

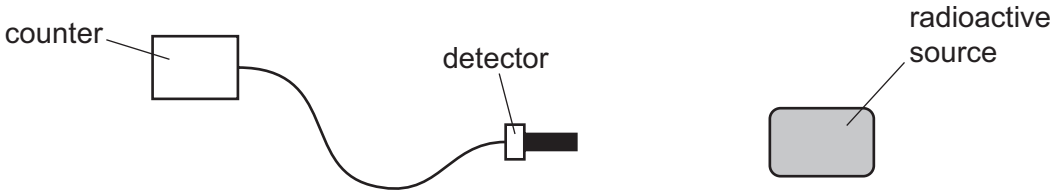

The average background count-rate is 20 counts / minute.

At the start of the experiment, the count-rate recorded by the counter is 1000 counts / minute.

What is the count-rate 10 minutes later?

A 490 counts / minute

B 500 counts / minute

C 510 counts / minute

D 530 counts / minute

Permission to reproduce items where third-party owned material protected by copyright is included has been sought and cleared where possible. Every reasonable effort has been made by the publisher (UCLES) to trace copyright holders, but if any items requiring clearance have unwittingly been included, the publisher will be pleased to make amends at the earliest possible opportunity.

To avoid the issue of disclosure of answer-related information to candidates, all copyright acknowledgements are reproduced online in the Cambridge Assessment International Education Copyright Acknowledgements Booklet. This is produced for each series of examinations and is freely available to download at www.cambridgeinternational.org after the live examination series.

Cambridge Assessment International Education is part of the Cambridge Assessment Group. Cambridge Assessment is the brand name of the University of Cambridge Local Examinations Syndicate (UCLES), which itself is a department of the University of Cambridge.

© UCLES 2019