Cambridge IGCSE

Cambridge Assessment International Education
Cambridge International General Certificate of Secondary Education

CANDIDATE NAME									
CENTRE NUMBER						CANDIDATE NUMBER				

PHYSICS **0625/42**

Paper 4 Theory (Extended) **May/June 2019**

1 hour 15 minutes

Candidates answer on the Question Paper.

No Additional Materials are required.

READ THESE INSTRUCTIONS FIRST

Write your centre number, candidate number and name on all the work you hand in.
Write in dark blue or black pen.
You may use an HB pencil for any diagrams or graphs.
Do not use staples, paper clips, glue or correction fluid.
DO **NOT** WRITE IN ANY BARCODES.

Answer **all** questions.
Electronic calculators may be used.
You may lose marks if you do not show your working or if you do not use appropriate units.
Take the weight of 1.0 kg to be 10 N (acceleration of free fall = 10 m / s^2).

At the end of the examination, fasten all your work securely together.
The number of marks is given in brackets [ ] at the end of each question or part question.

This syllabus is regulated for use in England, Wales and Northern Ireland as a Cambridge International Level 1/Level 2 Certificate.

© UCLES 2019

Cambridge Assessment International Education

1 A bus is travelling between points A and D. There are bus stops at A, B, C and D but the bus does not stop at B and C. Fig. 1.1 is a speed-time graph for the bus.

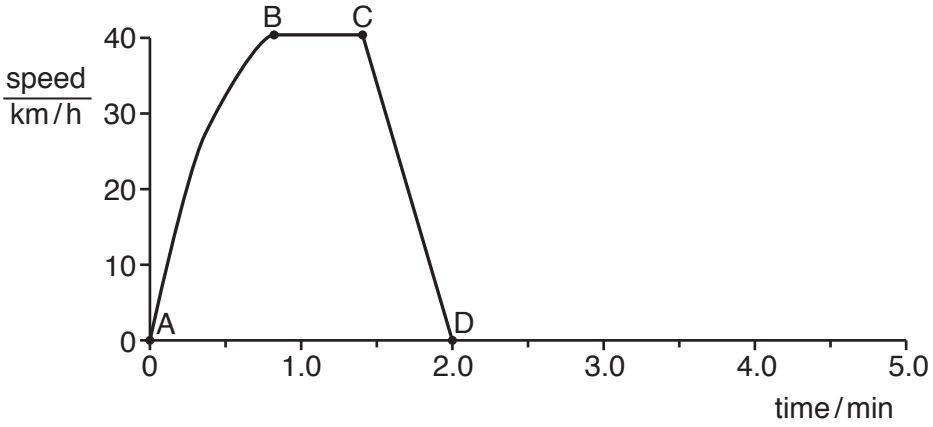

Fig. 1.1

(a) Describe the motion of the bus between each of the bus stops. Select the appropriate description from the list below.

View solution

constant acceleration **decreasing acceleration**

increasing acceleration **moving backwards at constant speed**

moving forwards at constant speed **stationary**

1. between A and B .....

2. between B and C .....

3. between C and D .....

[3]

(b) The average speed of the bus between A and D is 23 km / h.

View solution

Calculate the distance between A and D.

distance = ... [3]

(c) The bus stops at D for 1 min and then travels at a constant acceleration for 30 seconds.

On Fig. 1.1, sketch a possible graph for this additional motion. Label X when the bus starts to accelerate and label Y for 30 seconds later. [3]

[Total: 9]

View solution

© UCLES 2019

2 Fig. 2.1 shows a model fire engine. Its brakes are applied.

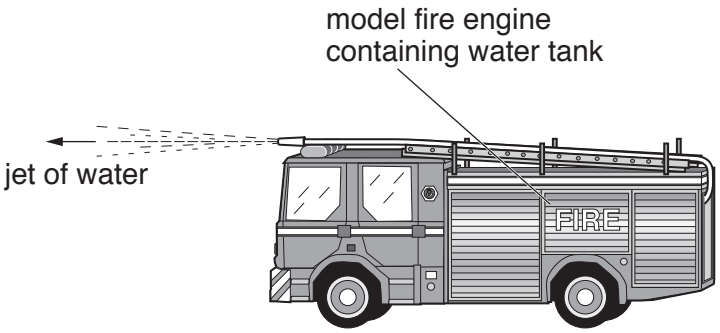

Fig. 2.1

0.80 kg of water is emitted in the jet every 6.0 s at a velocity of 0.72 m / s relative to the model.

(a) Calculate the change in momentum of the water that is ejected in 6.0 s.

View solution

momentum = ... [2]

(b) Calculate the magnitude of the force acting on the model because of the jet of water.

View solution

force = ... [2]

(c) The brakes of the model are released.

View solution

State and explain the direction of the acceleration of the model.

Statement .....

Explanation .....

.....

[2]

(d) In **(c)** the model contains a water tank, which is initially full.

View solution

State and explain any change in the magnitude of the initial acceleration if the brakes are first released when the tank is nearly empty.

Statement .....

Explanation .....

.....

.....

[3]

[Total: 9]

© UCLES 2019

3 Fig. 3.1 shows solar cells used to generate electrical energy.

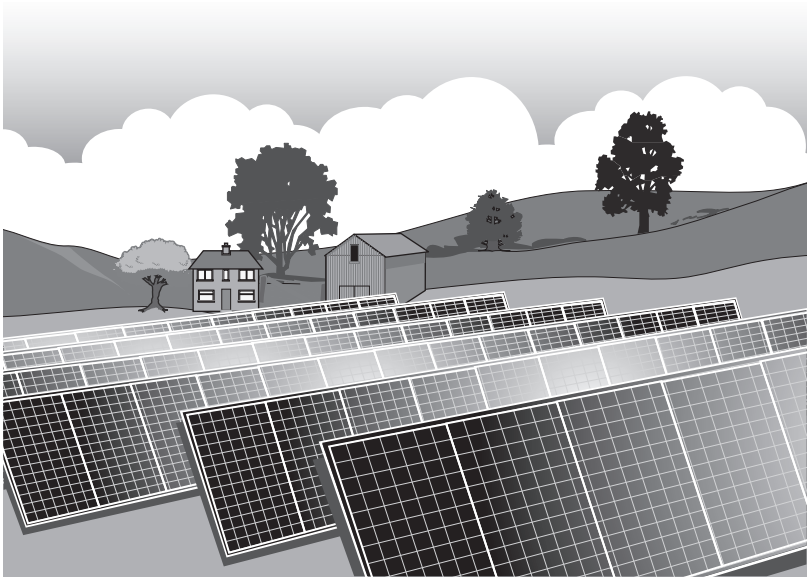

Fig. 3.1

View solution

(a) State the main form of energy transferred from the Sun to the solar cells for the generation of electrical energy.

..... [1]

(b) Consider the generation of electrical energy by a large number of solar cells, as shown in Fig. 3.1.

View solution

(i) State **one** environmental advantage and **one** environmental disadvantage.

advantage .....

.....

disadvantage .....

.....

[2]

(ii) State and explain whether this source of electrical energy is renewable.

View solution

.....

..... [1]

(c) Each group of solar cells is arranged in a rectangle 1.2 m × 2.8 m. The solar cells are situated in a region where 260 W of solar energy is received per square metre of the cells. The electrical output of each group of solar cells is a current of 2.5 A with a potential difference of 86 V.

View solution

Calculate the efficiency of the solar cells.

efficiency = ... % [4]

[Total: 8]

4 **(a)** State and explain, in terms of molecules, any change in the pressure of a gas when the volume is reduced at a constant temperature.

Statement .....

Explanation .....

.....

.....

.....

.....

.....

[3]

(b) Complete Table 4.1 to give the relative order of magnitude of the expansion of gases, liquids and solids for the same increase of temperature.

View solution

Write one of these words in each blank space:

gas **liquid** **solid**

Table 4.1

expands most	
expands least	

[2]

[Total: 5]

© UCLES 2019

5 **(a)** **(i)** A liquid is heated so that bubbles of its vapour rise to the surface and molecules escape to the atmosphere.

State the name of this process ..... [1]

(ii) At a lower temperature than in **(a)(i)**, molecules escape from the surface to the atmosphere.

State the name of this process ..... [1]

(b) **(i)** Fig. 5.1 shows apparatus used to determine the power output of a heater.

View solution

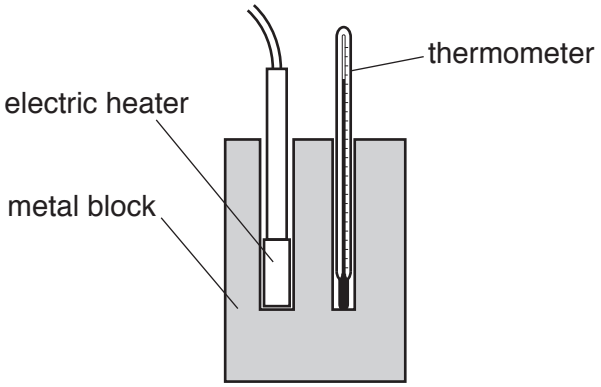

Fig. 5.1

The metal block has a mass of 2.7 kg. The metal of the block has a specific heat capacity of 900 J/(kg °C).

In 2 min 30 s, the temperature of the block increases from 21 °C to 39 °C.

Calculate the power of the heater.

power = ... [4]

(ii) State and explain a precaution that can be taken to improve the accuracy of the experiment.

Statement .....

Explanation .....

.....

[2]

[Total: 8]

© UCLES 2019

6 **(a)** Fig. 6.1 shows a water wave in a ripple tank.

View solution

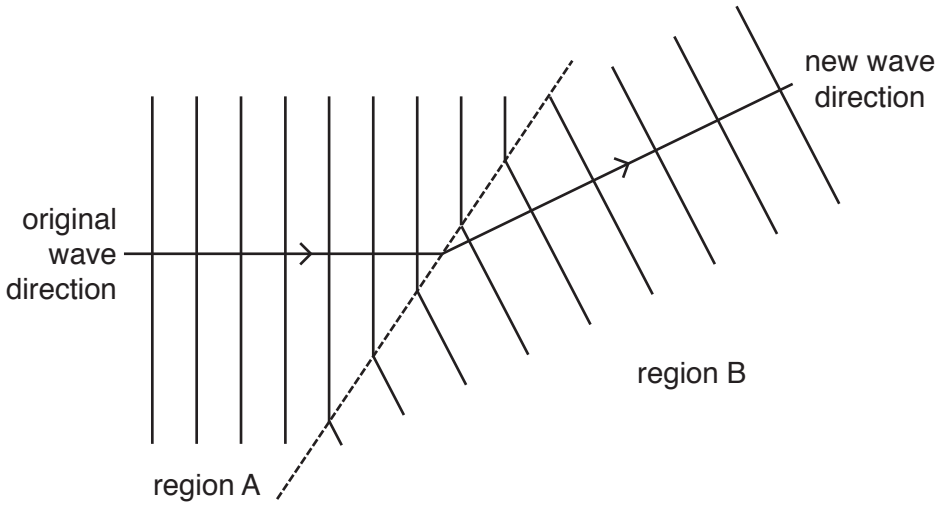

Fig. 6.1

(i) State the name of the process that occurs as the wave moves from region A to region B.

..... [1]

(ii) Suggest a cause for the change in direction of the wave.

..... [1]

View solution

(b) Fig. 6.2 shows a transverse wave.

View solution

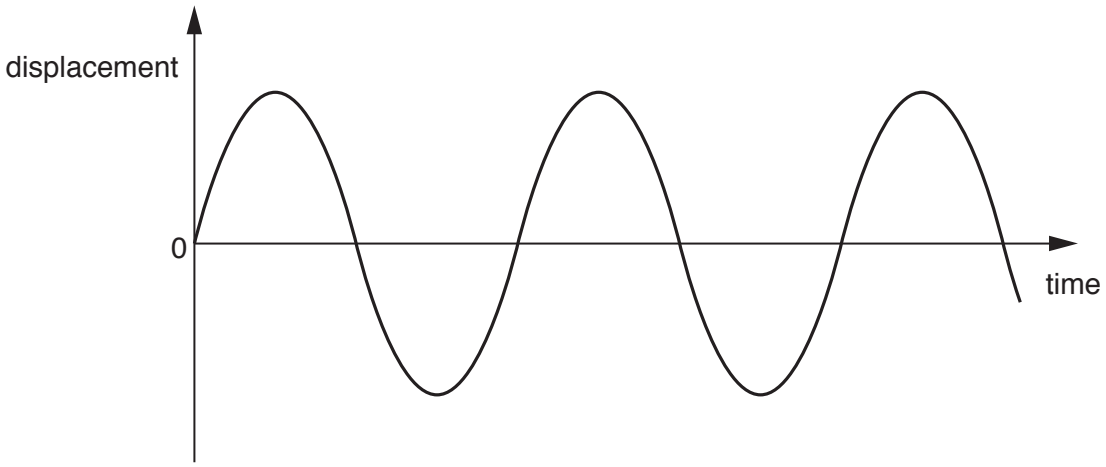

Fig. 6.2

On Fig. 6.2, draw a wave which has half the amplitude and a greater frequency than the wave shown. [2]

(c) A train travels along steel rails. A person waiting at a station hears the sound of the train through the rails before he hears the sound through the air.

View solution

(i) Explain why this happens.

.....

..... [1]

(ii) The speed of sound in the rails is 5800 m / s.

View solution

Calculate the wavelength of sound of frequency 1100 Hz travelling at this speed.

wavelength = ... [2]

[Total: 7]

7 **(a)** In Fig. 7.1, a converging lens projects a sharp image of an object O on to a screen.

View solution

Complete the paths of the two rays from the object to the screen.

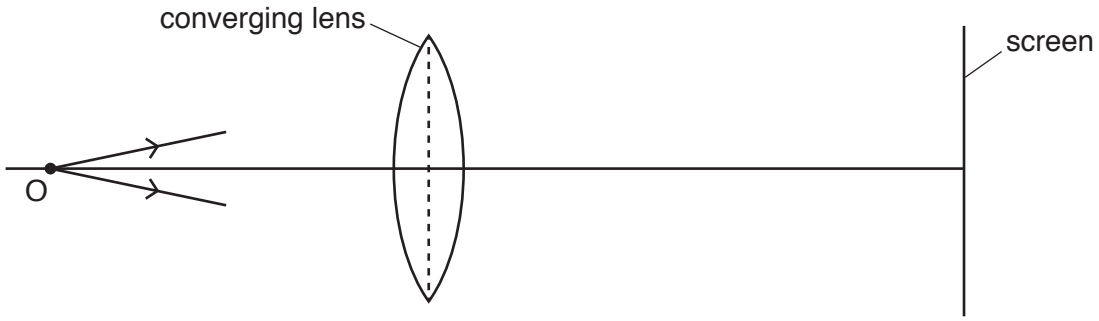

Fig. 7.1 [2]

(b) The converging lens in **(a)** is replaced with a thinner converging lens. The object O and the screen remain in the same positions as in **(a)**. The thinner converging lens has a longer focal length than the converging lens in **(a)**.

View solution

Complete the paths of the two rays from the object to the screen in Fig. 7.2.

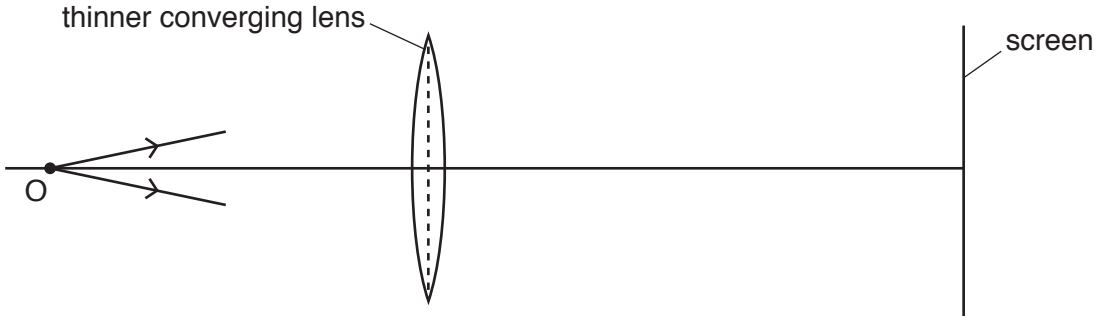

Fig. 7.2 [2]

(c) A converging lens is used as a magnifying glass.
The focal length of the lens is 10 cm.

View solution

(i) Describe the position of the object in relation to the lens.

.....

..... [1]

(ii) Describe the position of the image in relation to the lens and the object.

View solution

.....

..... [1]

(iii) Give three properties of the image formed by a magnifying glass.

View solution

.....

.....

..... [2]

[Total: 8]

© UCLES 2019

8 **(a)** A conducting sphere is mounted on an insulating stand. Explain how you would use a positively charged rod of insulating material to charge the sphere by induction.

.....

.....

.....

.....

..... [3]

(b) Fig. 8.1 shows an electronic component.

View solution

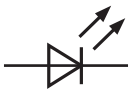

Fig. 8.1

State the name of the component shown in Fig. 8.1 ..... [1]

(c) In the space below, write down the truth table for a NAND gate.

View solution

[2]

(d) Fig. 8.2 shows the connections to two logic gates.

View solution

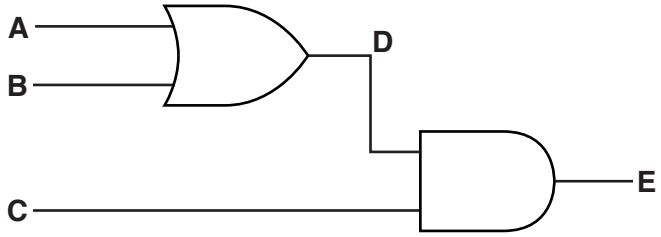

Fig. 8.2

Table 8.1 shows part of the truth table for the arrangement of logic gates in Fig. 8.2.

Complete Table 8.1 for the input values shown.

Table 8.1

inputs			intermediate point	output
A	**B**	**C**	**D**	**E**
0	0	1		
0	1	1		
1	1	0		
1	1	1		

[3]

[Total: 9]

© UCLES 2019

9 **(a)** Describe how to demagnetise a bar magnet using alternating current (a.c.) in a coil. View solution

.....

.....

.....

..... [3]

(b) Fig. 9.1 shows a simple direct current (d.c.) motor. View solution

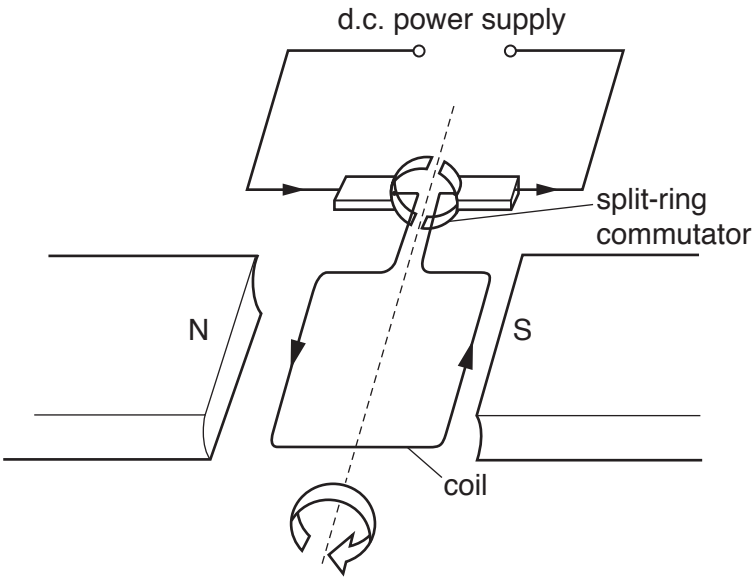

Fig. 9.1

(i) Explain the purpose of the split-ring commutator.

.....

.....

.....

..... [3]

(ii) The voltage of the power supply is increased. View solution

State the effect this has on the motor.

..... [1]

[Total: 7]

10 Fig. 10.1 shows a circuit containing a filament lamp of resistance 0.30 Ω and two resistors, each of resistance 0.20 Ω.

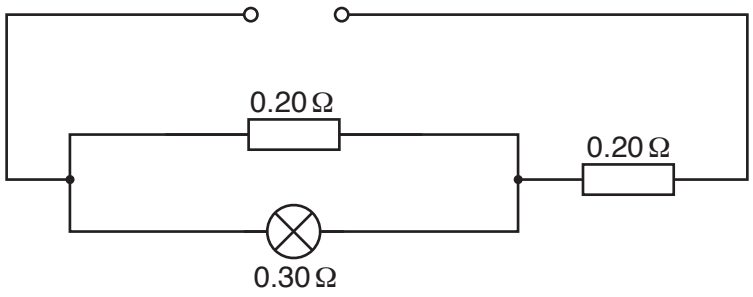

Fig. 10.1

(a) Calculate the combined resistance of the lamp and the two resistors.

View solution

resistance = ... [3]

(b) The potential difference (p.d.) of the supply is increased so that the current in the lamp increases.

State and explain any change in the resistance of the lamp.

View solution

Statement .....

Explanation .....

.....

[2]

[Total: 5]

© UCLES 2019

11 **(a)** A radon-222 nucleus contains 86 protons and 136 neutrons. It decays by emitting an α-particle and becomes a nucleus of an isotope of polonium. The symbol for radon is Rn and the symbol for polonium is Po.

View solution

Write down the nuclide equation for this decay.

[3]

(b) Carbon-14 is radioactive with a half-life of 5700 years. An animal bone is dug up in an archaeological excavation. The quantity of carbon-14 in the bone is 25% of what it was when the bone was buried.

View solution

Calculate the time that has elapsed since it was buried.

time = ... years [2]

[Total: 5]

BLANK PAGE

Permission to reproduce items where third-party owned material protected by copyright is included has been sought and cleared where possible. Every reasonable effort has been made by the publisher (UCLES) to trace copyright holders, but if any items requiring clearance have unwittingly been included, the publisher will be pleased to make amends at the earliest possible opportunity.

To avoid the issue of disclosure of answer-related information to candidates, all copyright acknowledgements are reproduced online in the Cambridge Assessment International Education Copyright Acknowledgements Booklet. This is produced for each series of examinations and is freely available to download at www.cambridgeinternational.org after the live examination series.

Cambridge Assessment International Education is part of the Cambridge Assessment Group. Cambridge Assessment is the brand name of the University of Cambridge Local Examinations Syndicate (UCLES), which itself is a department of the University of Cambridge.

© UCLES 2019