Cambridge IGCSE

**Cambridge Assessment International Education**
Cambridge International General Certificate of Secondary Education

| | | | | | | | | | |
|---|---|---|---|---|---|---|---|---|---|
| CANDIDATE NAME | | | | | | | | | |
| CENTRE NUMBER | | | | | | CANDIDATE NUMBER | | | |

**PHYSICS** **0625/43**

Paper 4 Theory (Extended) **May/June 2019**

**1 hour 15 minutes**

Candidates answer on the Question Paper.

No Additional Materials are required.

**READ THESE INSTRUCTIONS FIRST**

Write your centre number, candidate number and name on all the work you hand in.
Write in dark blue or black pen.
You may use an HB pencil for any diagrams or graphs.
Do not use staples, paper clips, glue or correction fluid.
DO **NOT** WRITE IN ANY BARCODES.

Answer **all** questions.
Electronic calculators may be used.
You may lose marks if you do not show your working or if you do not use appropriate units.
Take the weight of 1.0 kg to be 10 N (acceleration of free fall = 10 m/s$^2$).

At the end of the examination, fasten all your work securely together.
The number of marks is given in brackets [ ] at the end of each question or part question.

This syllabus is regulated for use in England, Wales and Northern Ireland as a Cambridge International Level 1/Level 2 Certificate.

This document consists of **18** printed pages and **2** blank pages.

© UCLES 2019

**BLANK PAGE**

© UCLES 2019

**1** Fig. 1.1 shows a distance-time graph for a cyclist travelling between points P and V on a straight road.

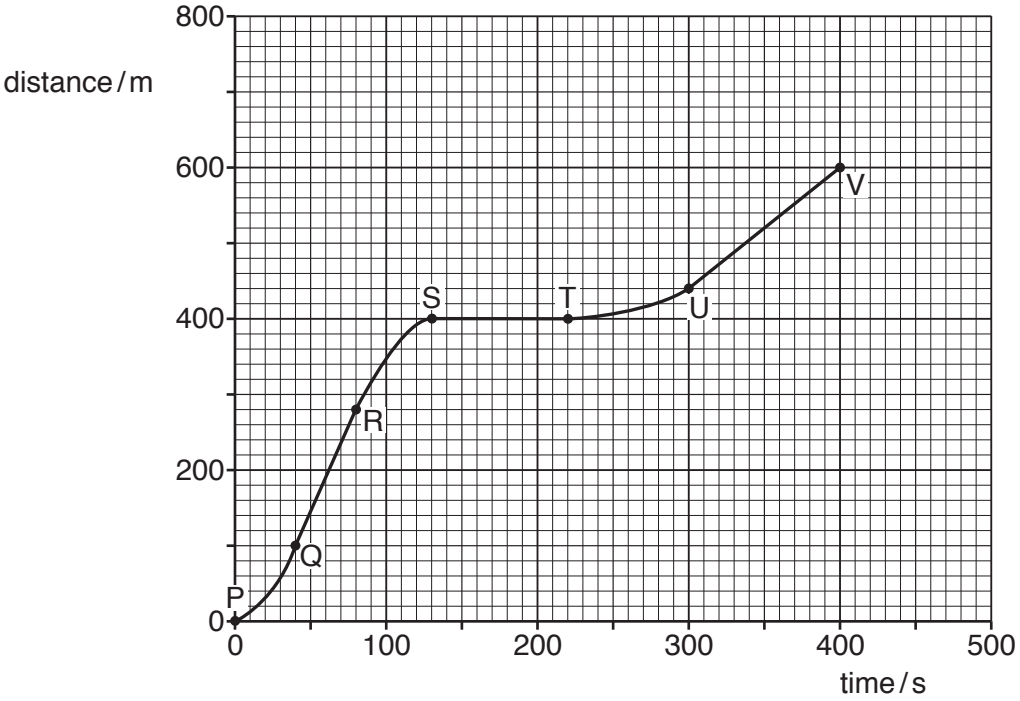


**Fig. 1.1**

**(a)** Describe the motion between:

View solution

Q and R .....

R and S .....

S and T. .....

[3]

**(b)** Calculate the speed between U and V.

View solution

speed = ..... [2]

**(c)** After point V, the straight road continues down a steep hill. The cyclist travels down the steep hill. He does not apply the brakes and all resistive forces can be ignored.

View solution

On Fig. 1.1, sketch a possible motion for the cyclist after V. [1]

[Total: 6]

© UCLES 2019

**2** Fig. 2.1 is the top view of a small ship of mass $1.2 \times 10^6$ kg. The ship is moving slowly sideways at 0.040 m/s as it comes in to dock.

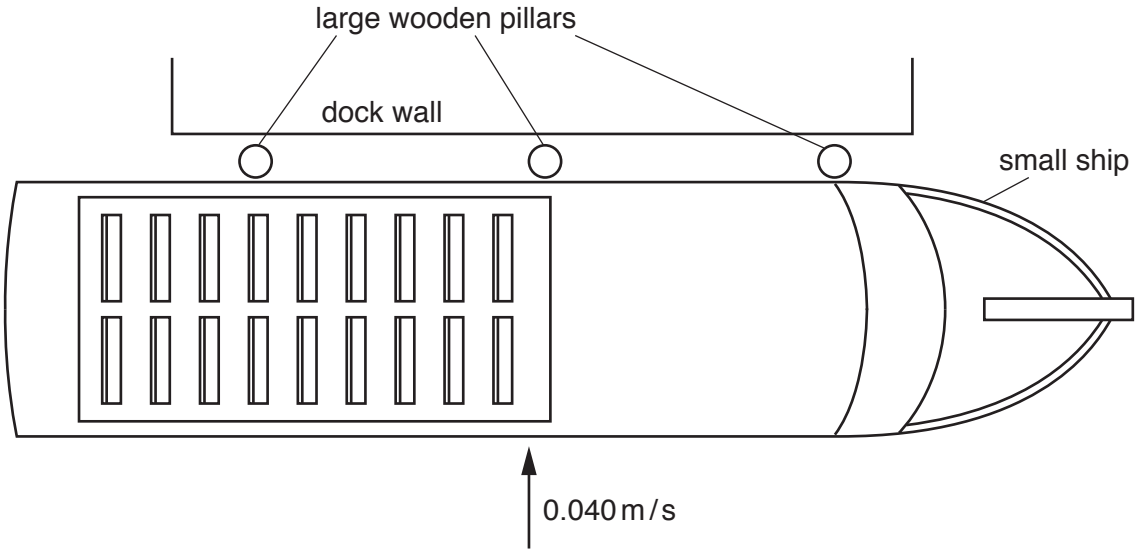


**Fig. 2.1**

The ship hits the wooden pillars which move towards the dock wall.

**(a)** Calculate the kinetic energy of the ship before it hits the pillars.

View solution

kinetic energy = ..... [2]

**(b)** The ship is in contact with the pillars for 0.30 s as it comes to rest.

Calculate the average force exerted on the side of the ship.

View solution

force = ..... [4]

© UCLES 2019

**(c)** Assume that the kinetic energy calculated in **(a)** is used to do work moving the pillars.

View solution

Calculate the distance moved by the pillars.

distance = ..... [2]

**(d)** Dock walls sometimes have the pillars replaced with rubber car tyres.

View solution

Explain how this reduces the possibility of damage when a boat docks.

.....

.....

..... [1]

[Total: 9]

**3** Fig. 3.1 shows a small submarine submerged below the surface of the sea.

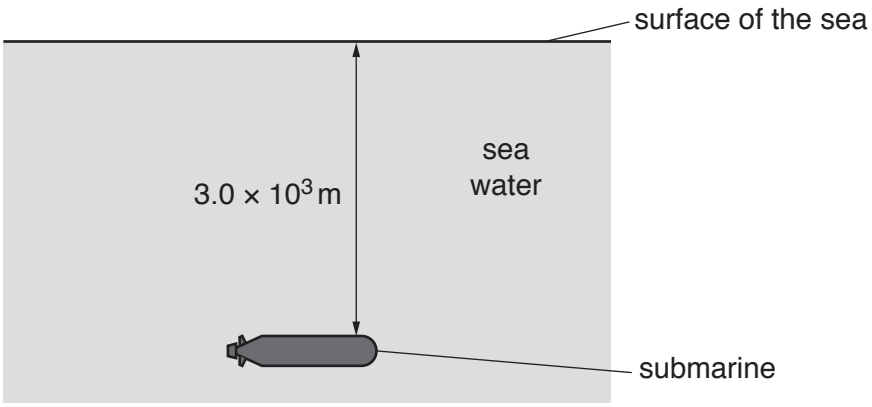


**Fig. 3.1**

**(a)** The density of sea water is 1030 kg / $m^3$.

Calculate the pressure due to the sea water on the top of the submarine when it is $3.0 \times 10^3$ m below the surface.

View solution

pressure = ..... [2]

**(b)** The submarine emits a pulse of sound to detect other objects in the sea. The speed of sound in sea water is 1500 m/s. An echo is received with a time delay of 0.50 s after the original sound is emitted.

View solution

**(i)** Calculate the distance between the submarine and the other object.

distance = ..... [3]

**(ii)** Another pulse of sound is emitted through the air when the submarine is on the surface.

An echo is received from a second object that is in the air. This echo is received 0.50 s after the pulse of sound is emitted.

Compare the distance of the second object from the submarine with the distance calculated in **(b)(i)**. Tick **one** box. Give a reason for your answer.

View solution

distance is smaller ☐

distance is the same ☐

distance is larger ☐

Reason ..... [1]

[Total: 6]

**4** **(a)** Water molecules escape to the atmosphere from water boiling in a pan. Water molecules evaporate from the surface of a bowl of cool water and also escape to the atmosphere.

View solution

State **two** ways in which boiling is different from evaporation.

1. .....

.....

2. .....

.....

[2]

**(b)** Fig. 4.1 shows a heater in a metal block.

View solution

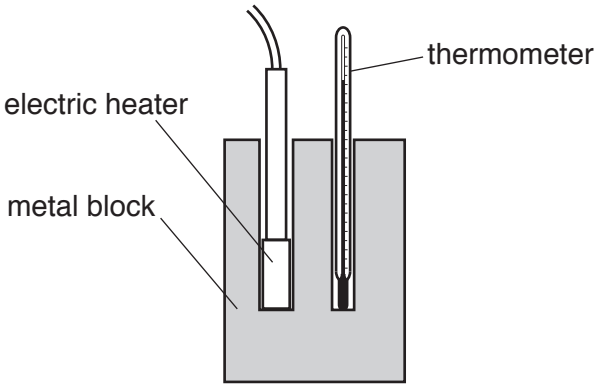


**Fig. 4.1**

The power of the heater is 370 W and it is switched on for 4.0 minutes. The metal block has a specific heat capacity of 420 J / (kg °C) and a mass of 5.0 kg.

Calculate the increase of temperature of the block. Assume all the thermal energy from the heater is transferred to the block.

temperature increase = ..... [4]

[Total: 6]

© UCLES 2019

**5** Fig. 5.1 shows a cross-section of the inside of a vacuum flask containing a cold liquid. The walls of the vacuum flask are made of glass.

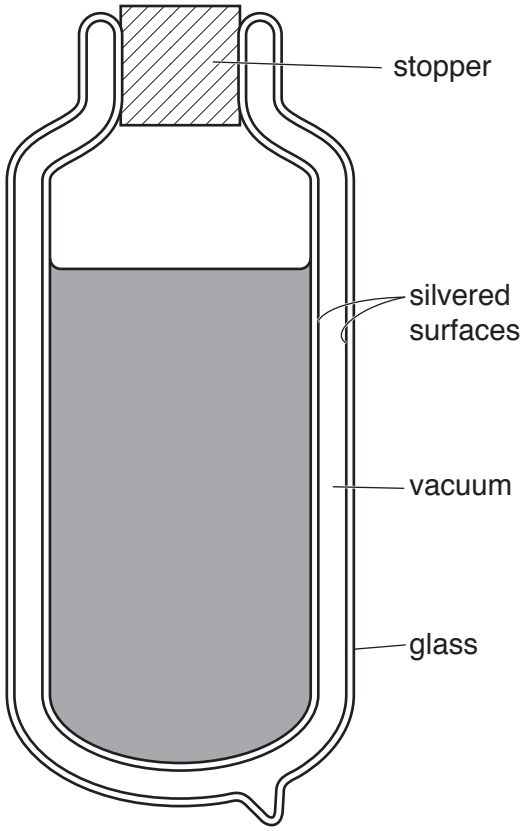


**Fig. 5.1**

**(a)** The vacuum flask is being used to keep a liquid cool on a hot day.

View solution

Explain how the labelled features of the vacuum flask keep the liquid cool by reducing thermal energy transfer. Include the names of the processes involved.

.....

.....

.....

.....

.....

.....

..... [5]

**(b)** Suggest a suitable material for the stopper.

View solution

..... [1]

[Total: 6]

**6** **(a)** Fig. 6.1 shows wavefronts of a wave approaching a narrow gap and passing through the gap. The wavelength is $\lambda$.

View solution

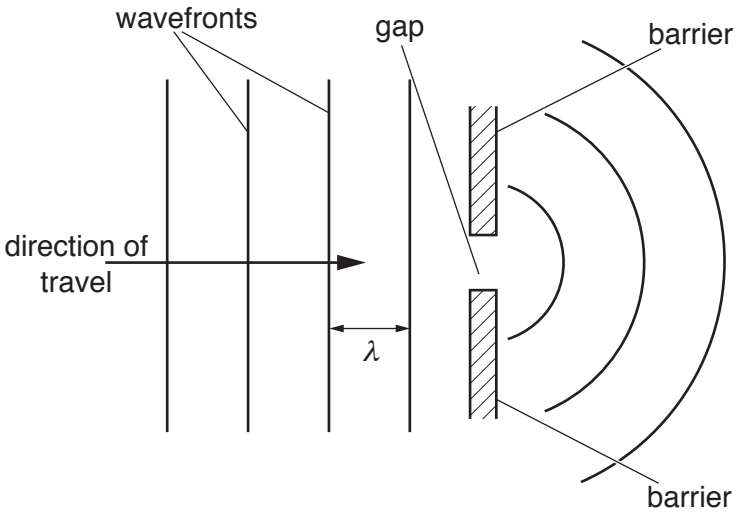


**Fig. 6.1**

**(i)** State the name of the process that occurs as the wave passes through the gap.

..... [1]

**(ii)** A wave with a wavelength $\frac{\lambda}{2}$ approaches the same gap.

On Fig. 6.2, draw three wavefronts for this wave as it approaches the gap and three more wavefronts as the wave continues beyond it. [3]

View solution



**Fig. 6.2**

**(b)** Table 6.1 shows 5 different types of electromagnetic wave.

In the blank column in Table 6.1, write the numbers 1 to 5 to show the order of wavelength. Write 1 for the wave with the shortest wavelength and 5 for the wave with the longest wavelength. [2]

View solution

**Table 6.1**

| type of electromagnetic wave | order of wavelength |
|---|---|
| gamma rays | |
| light | |
| microwaves | |
| ultraviolet | |
| X-rays | |

**(c)** **(i)** State the speed of radio waves in air.

View solution

..... [1]

**(ii)** A radio station transmits radio waves with a frequency of 96 MHz.
Calculate the wavelength of these radio waves.

View solution

wavelength = ..... [3]

[Total: 10]

© UCLES 2019

**BLANK PAGE**

© UCLES 2019

**7** Fig. 7.1 shows light approaching a boundary between two materials at speed *v*. The speed of the light after crossing the boundary is 1.3*v*.

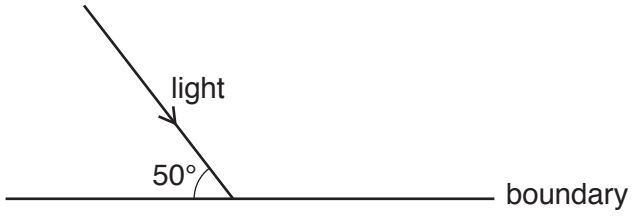


**Fig. 7.1**

**(a)** Determine the angle of incidence.

View solution

angle of incidence = ..... [1]

**(b)** Calculate the angle of refraction.

View solution

angle of refraction = ..... [3]

[Total: 4]

© UCLES 2019

**8** Fig. 8.1 shows a 240 V mains supply connected to an air-conditioning unit and a freezer. A fuse X is placed in the circuit as shown.

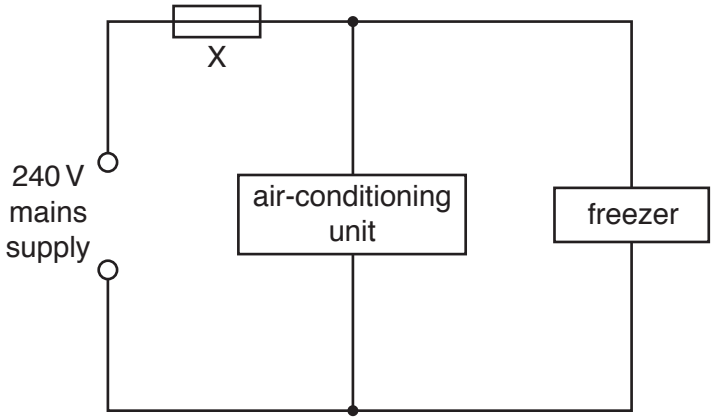


**Fig. 8.1**

The freezer has an operating power of 700 W.

**(a)** Calculate the current in the freezer.

View solution

current = ..... [2]

**(b)** The maximum operating current of the air-conditioning unit is 7.5 A.

View solution

Fuses of current rating 1 A, 3 A, 5 A, 10 A, 13 A and 30 A are available.

Suggest a suitable rating for fuse X. Give **two** reasons for your answer.

fuse rating .....

Reason 1 .....

.....

.....

Reason 2 .....

.....

..... [3]

© UCLES 2019

**(c)** A fuse is made out of a short length of wire.

View solution

Explain why fuses of a higher rating are made of thicker wire.

.....

.....

.....

.....

..... [3]

**(d)** Electrical energy can be obtained from renewable and non-renewable sources of energy.

View solution

**(i)** State **two** renewable sources of energy.

Source 1 .....

Source 2 ..... [2]

**(ii)** State **one** social, economic or environmental disadvantage of one of your answers to **(d)(i)**.

.....

.....

..... [1]

[Total: 11]

View solution

**9** **(a)** Fig. 9.1 shows an electrical component.

View solution

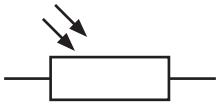

**Fig. 9.1**

State the name of the component shown in Fig. 9.1. ..... [1]

**(b)** In the space below, write down the truth table for a NOR gate.

View solution

[2]

© UCLES 2019

**(c)** Fig. 9.2 shows the connections between two logic gates.

View solution

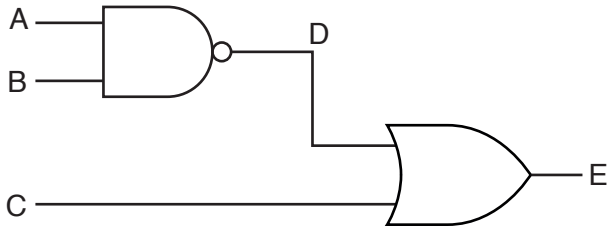


**Fig. 9.2**

Complete the truth table shown in Table 9.1 for this combination of logic gates.

**Table 9.1**

| inputs | | | intermediate point | output |
|---|---|---|---|---|
| A | B | C | D | E |
| 0 | 1 | 1 | | |
| 1 | 0 | 1 | | |
| 1 | 1 | 0 | | |
| 1 | 1 | 1 | | |

[3]

**(d)** Referring to a simple electron model, state what distinguishes electrical conductors from electrical insulators.

.....

.....

.....

..... [1]

[Total: 7]

View solution

**10** Fig. 10.1 shows a simple alternating current generator.

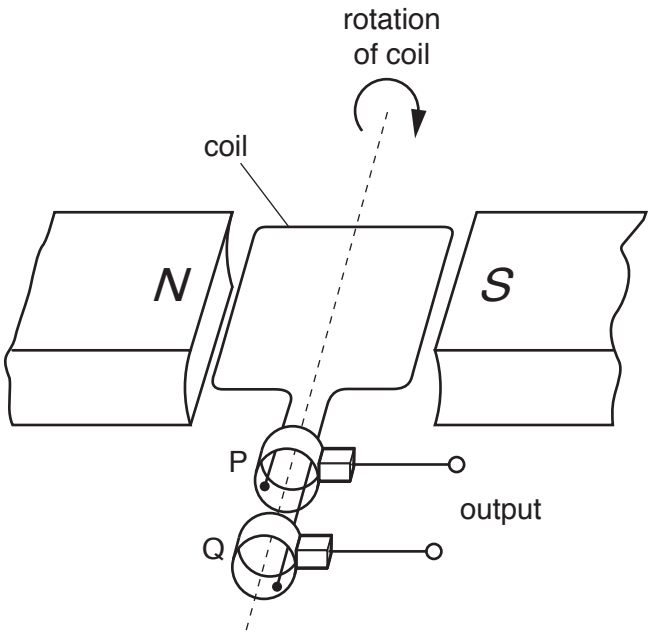


**Fig. 10.1**

**(a)** On Fig. 10.2, sketch a graph to show how the electromotive force (e.m.f.) induced varies with time for one revolution of the coil. Assume that the coil starts in the horizontal position, as shown in Fig. 10.1.
Label the points on the time axis where the coil has completed 1/4 revolution and 3/4 revolution. [3]

View solution

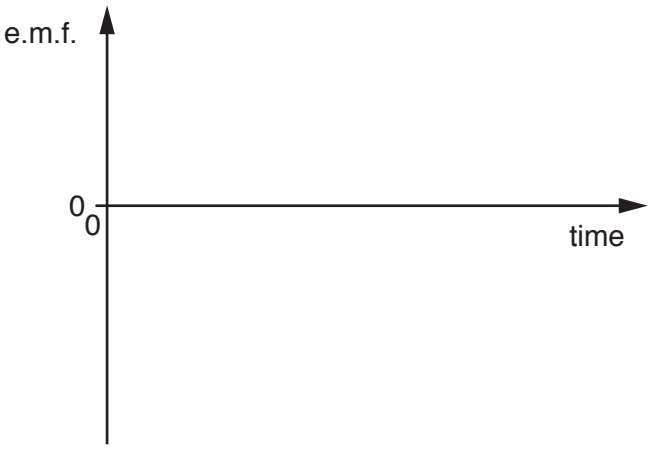


**Fig. 10.2**

**(b)** Explain why an e.m.f. is induced only when the coil is turning.

View solution

.....

.....

..... [1]

© UCLES 2019

**(c)** State the name of the components labelled P and Q and state their purpose.

View solution

Name: .....

Purpose: .....

..... [2]

**(d)** State **two** possible changes that cause a larger e.m.f. to be induced.

View solution

1. .....

2. .....

[2]

[Total: 8]

**11 (a)** Americium (Am) is a radioactive isotope. A nucleus of americium contains 95 protons and 146 neutrons. It decays by emitting an $\alpha$-particle to form a nucleus of an isotope of neptunium (Np).

View solution

Write down the nuclide equation for the decay of americium to neptunium.

[4]

**(b)** Ionisation smoke detectors contain americium and two small electrodes with a small voltage between them. The air between the electrodes is ionised by $\alpha$-particles so that there is a small electric current between the electrodes.

**(i)** Suggest and explain the effect of smoke on the current between the electrodes in the smoke detector.

Suggestion: .....

.....

Explanation: .....

..... [1]

**(ii)** Suggest **two** reasons for using an $\alpha$-particle emitter in a smoke detector.

View solution

Reason 1 .....

.....

Reason 2 .....

..... [2]

[Total: 7]

Permission to reproduce items where third-party owned material protected by copyright is included has been sought and cleared where possible. Every reasonable effort has been made by the publisher (UCLES) to trace copyright holders, but if any items requiring clearance have unwittingly been included, the publisher will be pleased to make amends at the earliest possible opportunity.

To avoid the issue of disclosure of answer-related information to candidates, all copyright acknowledgements are reproduced online in the Cambridge Assessment International Education Copyright Acknowledgements Booklet. This is produced for each series of examinations and is freely available to download at www.cambridgeinternational.org after the live examination series.

Cambridge Assessment International Education is part of the Cambridge Assessment Group. Cambridge Assessment is the brand name of the University of Cambridge Local Examinations Syndicate (UCLES), which itself is a department of the University of Cambridge.

© UCLES 2019