Cambridge IGCSE

Cambridge Assessment International Education
Cambridge International General Certificate of Secondary Education

CANDIDATE NAME									
CENTRE NUMBER						CANDIDATE NUMBER				

PHYSICS **0625/51**

Paper 5 Practical Test **May/June 2019**

1 hour 15 minutes

Candidates answer on the Question Paper.

Additional Materials: As listed in the Confidential Instructions

READ THESE INSTRUCTIONS FIRST

Write your centre number, candidate number and name in the spaces at the top of the page.
Write in dark blue or black pen.
You may use an HB pencil for any diagrams or graphs.
Do not use staples, paper clips, glue or correction fluid.
DO **NOT** WRITE IN ANY BARCODES.

Answer **all** questions.
You are advised to spend about 20 minutes on each of questions 1 to 3, and 15 minutes on question 4.
Electronic calculators may be used.
You may lose marks if you do not show your working or if you do not use appropriate units.

At the end of the examination, fasten all your work securely together.
The number of marks is given in brackets [ ] at the end of each question or part question.

For Examiner's Use	
1	
2	
3	
4	
Total	

This syllabus is regulated for use in England, Wales and Northern Ireland as a Cambridge International Level 1/Level 2 Certificate.

This document consists of **9** printed pages and **3** blank pages.

© UCLES 2019

1 In this experiment, you will determine the weight of a metre rule using a balancing method.

Carry out the following instructions, referring to Fig. 1.1.

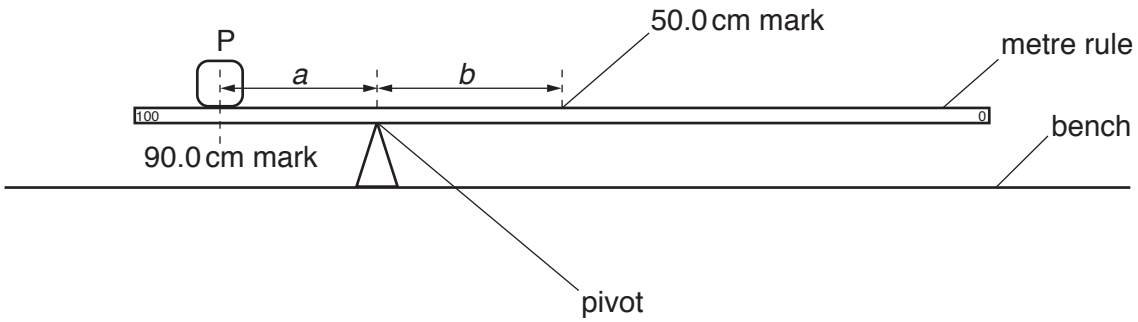

Fig. 1.1

(a) Place the metre rule on the pivot. Place the load P with its centre on the metre rule at the 90.0 cm mark. Keeping the load P at the 90.0 cm mark, adjust the position of the metre rule on the pivot so that the metre rule is as near as possible to being balanced.

Measure, and record in the first row of Table 1.1, the distance *a* from the 90.0 cm mark to the pivot.

Measure, and record in the first row of Table 1.1, the distance *b* from the pivot to the 50.0 cm mark.

Repeat the steps above, placing the centre of the load P at the 85.0 cm, 80.0 cm, 75.0 cm and 70.0 cm marks. Record all values of *a* and *b* in Table 1.1.

View solution

Table 1.1

a/cm	*b*/cm

[3]

(b) Plot a graph of a/cm (y-axis) against b/cm (x-axis). You do **not** need to begin your axes at the origin (0, 0).

View solution

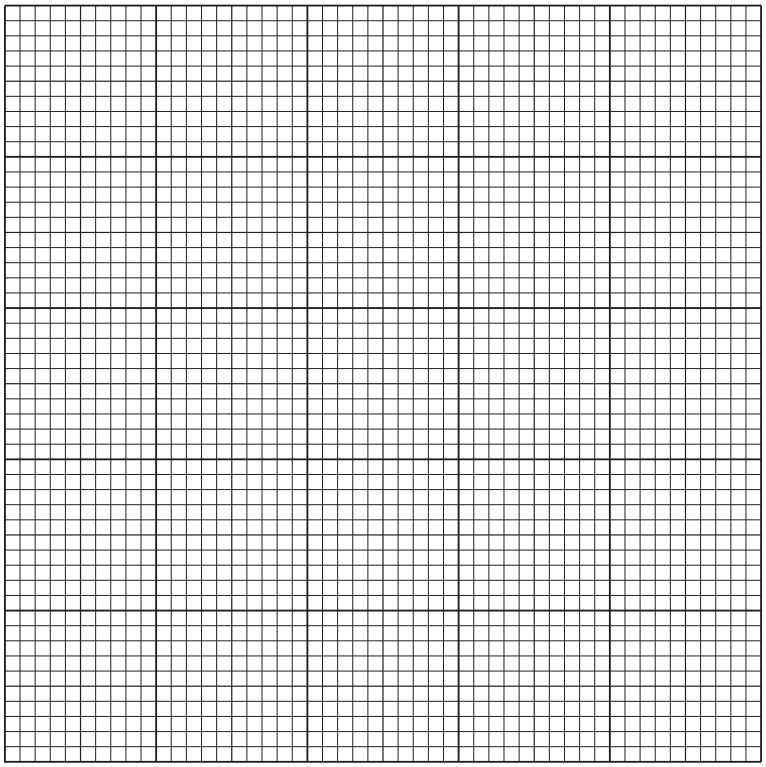

[4]

(c) Determine the gradient G of the graph. Show clearly on the graph how you obtained the necessary information.

View solution

G = ... [1]

(d) Calculate the weight W of the metre rule using the equation $W = G \times P$, where $P = 1.0\,\text{N}$.

View solution

W = ... [1]

(e) Suggest **one** practical reason why it is difficult to obtain accurate readings for a and b in this type of experiment.

.....

..... [1]

(f) Use the balance provided to measure the mass of the metre rule.

View solution

mass = ... [1]

[Total: 11]

2 In this experiment, you will determine the resistance of a resistance wire.

Carry out the following instructions, referring to Fig. 2.1.

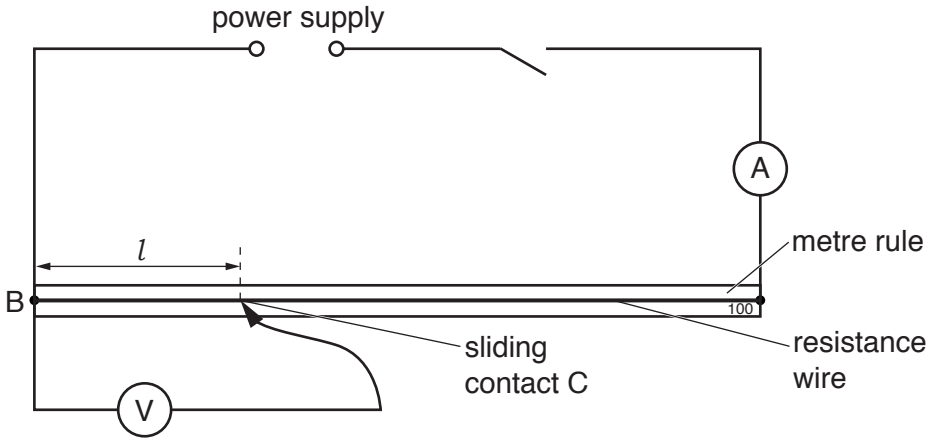

Fig. 2.1

(a) (i) Switch on.

Measure the current I in the circuit.

I = ... [1]

(ii) Place the sliding contact C at a distance l = 20.0 cm from B.

Measure, and record in Table 2.1, the potential difference V across the length l of the resistance wire.

Calculate, and record in Table 2.1, $\frac{V}{l}$.

Repeat the procedure using l values of 40.0 cm, 60.0 cm, 80.0 cm and 100.0 cm.

Switch off.

Table 2.1

l/cm	V/V	$\frac{V}{l}\Big/\frac{\text{V}}{\text{cm}}$
20.0		
40.0		
60.0		
80.0		
100.0		

[4]

(b) Look carefully at the values of $\frac{V}{l}$ in Table 2.1.

View solution

(i) Tick the box to show your conclusion from the results.

- ☐ $\frac{V}{l}$ is approximately constant.
- ☐ $\frac{V}{l}$ is decreasing as V increases.
- ☐ $\frac{V}{l}$ is increasing as V increases.
- ☐ There is no simple pattern for $\frac{V}{l}$ in the results.

[1]

(ii) Justify your conclusion by reference to your results.

View solution

.....

..... [1]

(c) Calculate the resistance of 100 cm of the resistance wire using the equation $R = \frac{V}{I}$, where V is the potential difference across 100 cm of the resistance wire. Use the value of current I from part **(a)(i)**. Give your answer to a suitable number of significant figures for this experiment and include the unit.

View solution

R = ... [3]

(d) In this type of experiment, it is sensible to keep the temperature of the resistance wire as close to room temperature as possible. Suggest **one** way to minimise the rise in temperature of the resistance wire.

.....

..... [1]

[Total: 11]

View solution

© UCLES 2019

3 In this experiment, you will investigate the rate of cooling of water under different conditions. A greater rate of cooling occurs if there is a greater change in the temperature during the same period of time.

Carry out the following instructions referring to Fig. 3.1. You are provided with a beaker labelled A and a can labelled B.

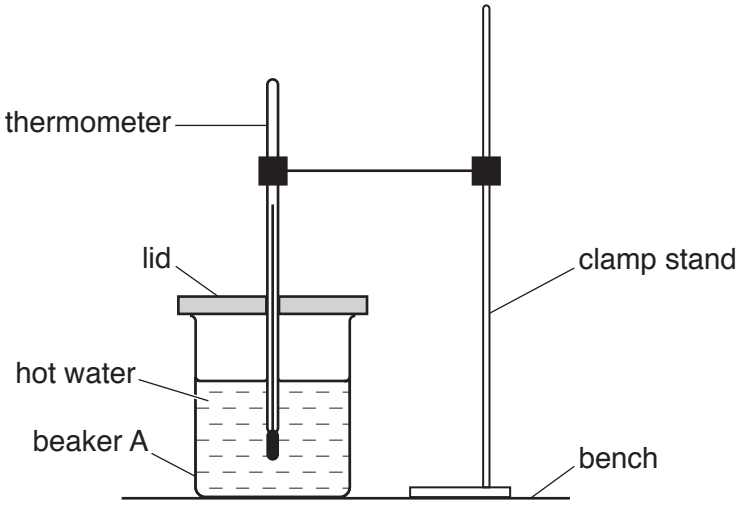

Fig. 3.1

(a) Use the thermometer to measure room temperature θ_R.

View solution

θ_R = ... [1]

(b) Pour 200 cm^3 of hot water into beaker A. Place the lid on the beaker and place the thermometer in the beaker, as shown in Fig. 3.1.

Record in Table 3.1 the temperature θ of the hot water at time t = 0. Immediately start the stopclock.

After 30 s, measure the temperature θ shown on the thermometer. Record the time t = 30 s and the temperature reading in Table 3.1.

Continue recording the time and the temperature readings every 30 s until you have six sets of readings.

[3]

View solution

Table 3.1

beaker A

t / s	θ / °C

Table 3.2

can B

t / s	θ / °C

(c) Pour 200 cm^3 of hot water into can B. Place the lid on the can and place the thermometer in the can.

Record in Table 3.2 the temperature θ of the hot water at time $t = 0$. Immediately start the stopclock.

After 30 s, measure the temperature θ shown on the thermometer. Record the time $t = 30$ s and the temperature reading in Table 3.2.

Continue recording the time and temperature readings every 30 s until you have six sets of readings.

View solution [2]

(d) Look carefully at the readings in Table 3.1 and in Table 3.2.

(i) Tick the box to show your conclusion from the readings.

View solution

☐ The water in the beaker has a greater rate of cooling than the water in the can.

☐ The water in the beaker has a smaller rate of cooling than the water in the can.

☐ There is no significant difference between the rates of cooling of the water in the beaker and the can.

[1]

(ii) Justify your conclusion by reference to your readings.

View solution

.....

.....

.....

..... [2]

(e) A student in another school carries out the experiment and reports that the rate of cooling of the water in the can is different from the rate of cooling of the water in the beaker. He plans a change to the experiment to find out whether this difference in the rates of cooling is caused by

- the matt black surface of the can being a better radiator of thermal energy than the shiny surface of the beaker
- the metal of the can being a better conductor of thermal energy than the material of the beaker.

Suggest **two** suitable changes to the apparatus that the student could make.

View solution

1. .....

.....

2. .....

.....

[2]

[Total: 11]

4 A student is investigating the work required to pull a box containing some masses up a sloping wooden board. Fig. 4.1 shows the board and the box.

Plan an experiment to investigate how the work required to pull the box up the slope depends on the mass of the box and its contents.

View solution

Work done is calculated using the equation:

work done = force × distance moved in the direction of the force.

You are **not** required to carry out this experiment.

The following apparatus is available to the students:

a wooden board
a box with a length of string attached
a selection of masses that fit in the box
a metre rule
an electronic balance.

In your plan, you should:

- list any other apparatus that you would use
- explain briefly how you would carry out the investigation, including the measurements you would take
- state the key variables that you would control
- draw a suitable table, with column headings, to show how you would display your readings (you are **not** required to enter any readings in the table)
- explain how you would use the results to reach a conclusion.

You may add to the diagram if it helps your explanation.

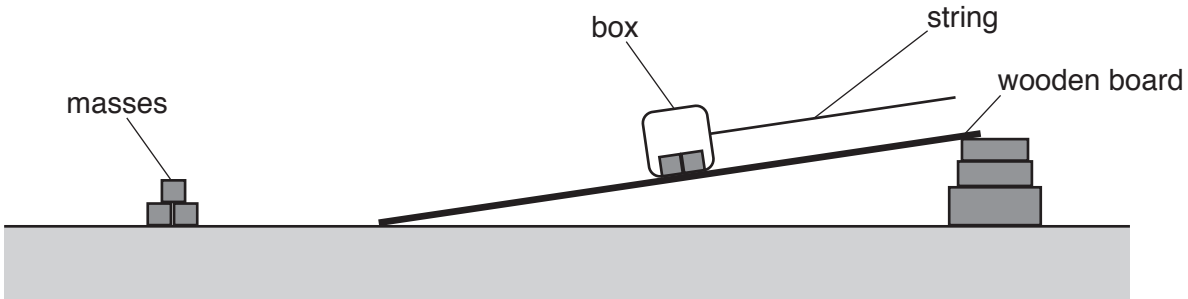

Fig. 4.1

© UCLES 2019

.....

.....

.....

BLANK PAGE

© UCLES 2019

BLANK PAGE

© UCLES 2019

BLANK PAGE

Permission to reproduce items where third-party owned material protected by copyright is included has been sought and cleared where possible. Every reasonable effort has been made by the publisher (UCLES) to trace copyright holders, but if any items requiring clearance have unwittingly been included, the publisher will be pleased to make amends at the earliest possible opportunity.

To avoid the issue of disclosure of answer-related information to candidates, all copyright acknowledgements are reproduced online in the Cambridge Assessment International Education Copyright Acknowledgements Booklet. This is produced for each series of examinations and is freely available to download at www.cambridgeinternational.org after the live examination series.

Cambridge Assessment International Education is part of the Cambridge Assessment Group. Cambridge Assessment is the brand name of the University of Cambridge Local Examinations Syndicate (UCLES), which itself is a department of the University of Cambridge.

© UCLES 2019