Cambridge IGCSE

Cambridge Assessment International Education
Cambridge International General Certificate of Secondary Education

CANDIDATE NAME									
CENTRE NUMBER						CANDIDATE NUMBER				

PHYSICS **0625/52**

Paper 5 Practical Test **May/June 2019**

1 hour 15 minutes

Candidates answer on the Question Paper.

Additional Materials: As listed in the Confidential Instructions.

READ THESE INSTRUCTIONS FIRST

Write your centre number, candidate number and name in the spaces at the top of the page.
Write in dark blue or black pen.
You may use an HB pencil for any diagrams or graphs.
Do not use staples, paper clips, glue or correction fluid.
DO **NOT** WRITE IN ANY BARCODES.

Answer **all** questions.
You are advised to spend about 20 minutes on each of questions 1 to 3, and 15 minutes on question 4.
Electronic calculators may be used.
You may lose marks if you do not show your working or if you do not use appropriate units.

At the end of the examination, fasten all your work securely together.
The number of marks is given in brackets [ ] at the end of each question or part question.

For Examiner's Use	
1	
2	
3	
4	
Total	

This syllabus is regulated for use in England, Wales and Northern Ireland as a Cambridge International Level 1/Level 2 Certificate.

This document consists of **11** printed pages and **1** blank page.

© UCLES 2019

1 In this experiment, you will investigate moments using a balancing method.

Carry out the following instructions, referring to Fig. 1.1.

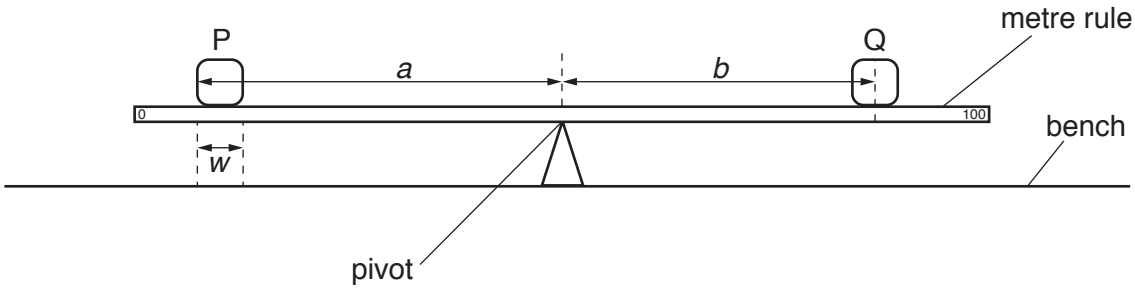

Fig. 1.1

(a) Place the metre rule on the pivot, without the loads P and Q, and adjust its position so that the metre rule is as near as possible to being balanced. **The rule must remain at this position on the pivot throughout the experiment**.

Place the load P on the metre rule so that the **edge** that is furthest from the pivot is exactly at the 10.0 cm mark on the rule.

Record in Table 1.1, the distance *a* between this **edge** of the load P and the pivot, as shown in Fig. 1.1.

Place the load Q on the metre rule and adjust the position of load Q so that the metre rule is as near as possible to being balanced.

Determine the distance *b* between the **centre** of load Q and the pivot, as shown in Fig. 1.1. Record the distance *b* in Table 1.1.

Repeat the procedure, with the **edge** of the load P that is furthest from the pivot at the 15.0 cm, 20.0 cm, 25.0 cm and 30.0 cm marks. Record all the readings in Table 1.1.

View solution

Table 1.1

a/cm	*b*/cm

[2]

(b) Plot a graph of a/cm (y-axis) against b/cm (x-axis). Start both axes at the origin (0,0).

View solution

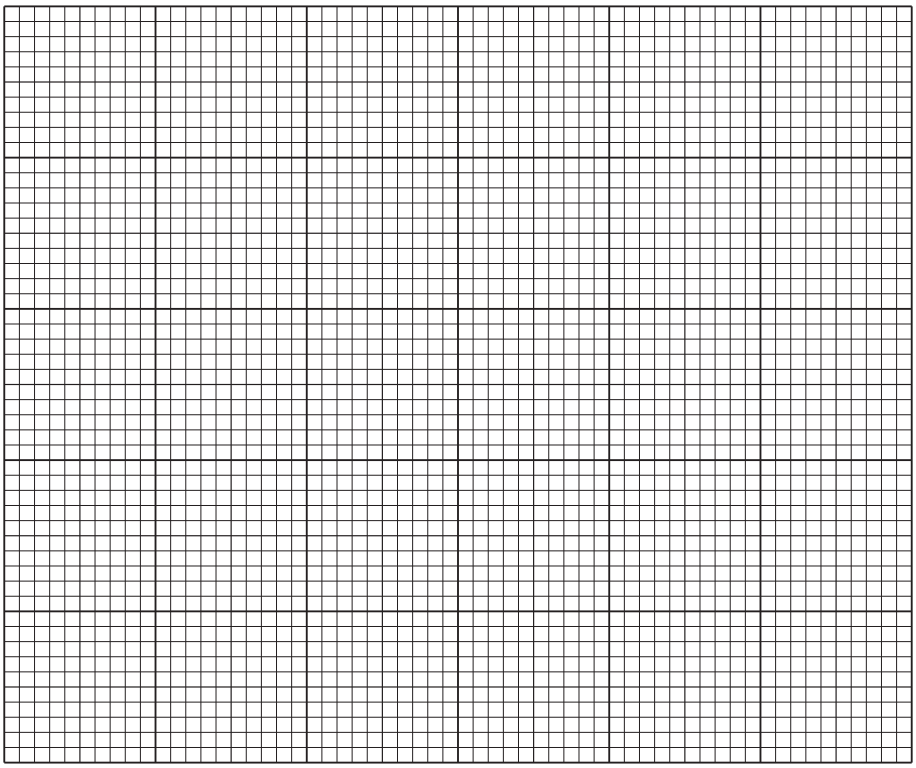

[4]

(c) Determine the gradient G of the graph. Show clearly on the graph how you obtained the necessary information.

View solution

G = ... [2]

(d) Determine the intercept C on the y-axis of the graph. This is the value of a when $b = 0$.

View solution

C = ... [1]

(e) Measure the width w of the load P. View solution

w = ... [1]

(f) Suggest **one** practical reason why it is difficult to obtain accurate values for a and b.

View solution

.....

..... [1]

[Total: 11]

2 In this experiment, you will investigate the rate of cooling of water under different conditions. A greater rate of cooling occurs if there is a greater change in the temperature during the same period of time.

Carry out the following instructions referring to Fig. 2.1 and Fig. 2.2.

Beaker A has a lid. Beaker B is on a mat made of the same material as the lid. The mat and the lid have the same thickness.

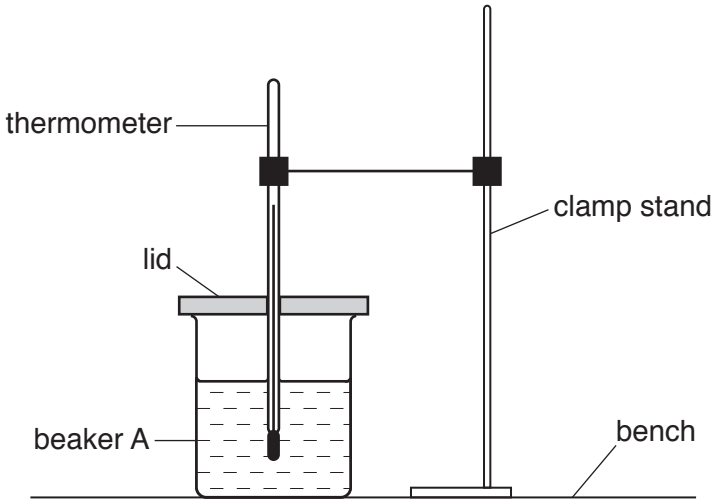

Fig. 2.1

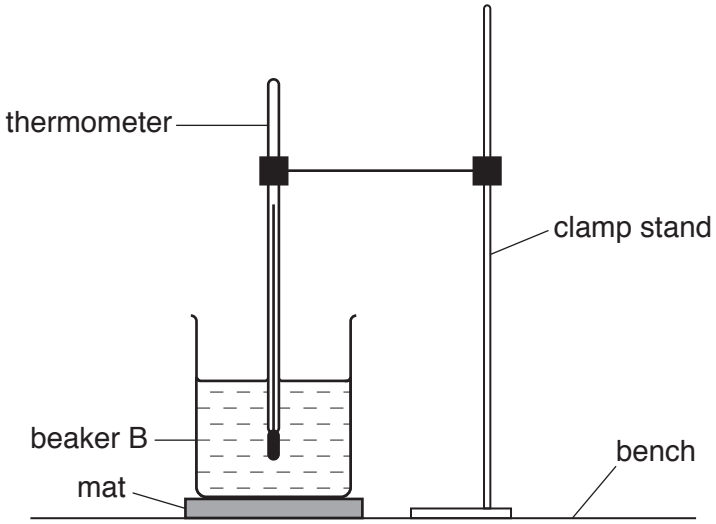

Fig. 2.2

© UCLES 2019

(a) Use the thermometer to measure room temperature θ_R.

View solution

θ_R = ... [1]

(b) Pour 200 cm^3 of hot water into beaker A. Place the lid on the beaker and place the thermometer in the beaker, as shown in Fig. 2.1.

Record in Table 2.1 the temperature θ of the hot water at time t = 0. Immediately start the stopclock.

After 30 s, measure the temperature θ shown on the thermometer. Record the time t = 30 s and the temperature reading in Table 2.1.

Continue recording the time and temperature readings every 30 s until you have six sets of readings in Table 2.1.

[3]

View solution

Table 2.1

Beaker A, with lid	
t/s	θ/°C

Table 2.2

Beaker B, on mat	
t/s	θ/°C

(c) Pour 200 cm^3 of hot water into beaker B. Check that the beaker is on the mat and place the thermometer in the beaker, as shown in Fig. 2.2. Do **not** use the lid.

Record in Table 2.2 the temperature θ of the hot water at time t = 0. Immediately start the stopclock.

After 30 s, measure the temperature θ shown on the thermometer. Record the time t = 30 s and the temperature reading in Table 2.2.

Continue recording the time and temperature readings every 30 s until you have six sets of readings in Table 2.2.

[2]

View solution

(d) Look carefully at the readings in Table 2.1 and in Table 2.2.

View solution

(i) Tick the box to show your conclusion from the readings.

☐ The lid reduces the rate of cooling of the water significantly more than the mat reduces the rate of cooling of the water.

☐ The mat reduces the rate of cooling of the water significantly more than the lid reduces the rate of cooling of the water.

☐ There is no significant difference between the lid and the mat in reducing the rate of cooling of the water.

[1]

(ii) Justify your conclusion by reference to your readings.

View solution

.....

.....

[2]

(e) A student plans to repeat the experiment using the same apparatus and the same volume of water. Suggest **one** change to the procedure that would decrease the rate of cooling of the water.

.....

..... [1]

(f) State **one** precaution that you took in order to record accurate temperature readings.

View solution

.....

..... [1]

[Total: 11]

3 In this experiment, you will investigate resistance.

The circuit shown in Fig. 3.1 has been set up for you.

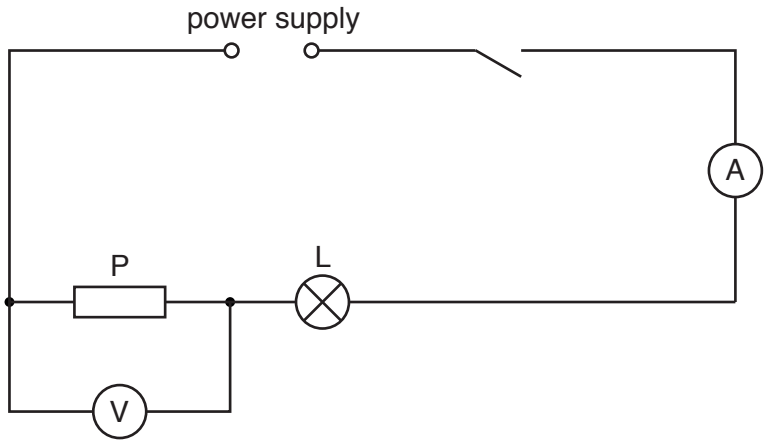

Fig. 3.1

View solution

(a) (i) Switch on. Measure and record the potential difference V_1 across the resistor P and the current I_1 in the circuit. Switch off.

V_1 = ...

I_1 = ...

[2]

(ii) Calculate the resistance R_1 of the resistor P using the equation $R_1 = \frac{V_1}{I_1}$.

View solution

R_1 = ... [1]

© UCLES 2019

(b) Disconnect the voltmeter.

View solution

Connect the voltmeter across the lamp L. Switch on.

Measure and record the potential difference V_2 across the lamp L. Switch off.

V_2 = ...

Calculate the resistance R_2 of the lamp L using the equation $R_2 = \frac{V_2}{I_1}$.

R_2 = ... [1]

(c) Disconnect the voltmeter. Replace the resistor P with the resistor Q.

View solution

Connect the voltmeter across the resistor Q. Switch on.

Measure and record the potential difference V_3 across the resistor Q and the current I_2 in the circuit. Switch off.

V_3 = ...

I_2 = ...

Calculate the resistance R_3 of the resistor Q using the equation $R_3 = \frac{V_3}{I_2}$.

R_3 = ... [1]

(d) Disconnect the voltmeter.

View solution

Connect the voltmeter across the lamp L. Switch on.

Measure and record the potential difference V_4 across the lamp L. Switch off.

V_4 = ...

Calculate the resistance R_4 of the lamp L using the equation $R_4 = \frac{V_4}{I_2}$.

R_4 = ... [1]

© UCLES 2019

(e) State whether your results suggest that resistor P and resistor Q have the same value of resistance, within the limits of experimental accuracy. Justify your statement by reference to your results.

statement .....

justification .....

.....

.....

[2]

(f) Complete the circuit diagram in Fig. 3.2 to show that:

View solution

- the two resistors and the lamp are all connected in parallel
- the voltmeter is connected to measure the potential difference across the resistors and the lamp

You are not required to set up this circuit.

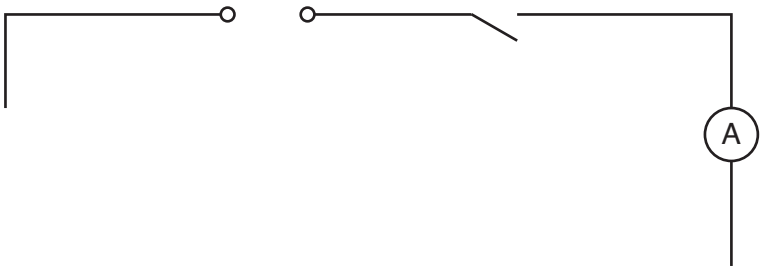

Fig. 3.2

[2]

(g) State the name of the circuit component that you would add to the circuit you have drawn to control the current in the circuit.

..... [1]

[Total: 11]

View solution

4 A student is investigating the relationship between the thickness of a converging (convex) lens and its focal length. Fig. 4.1 shows the cross-section of a converging lens.

The focal length f of a lens can be calculated if u (the distance between the object and the lens) and v (the distance between the lens and the image on a screen) are known.

View solution

The equation is: $f = \frac{uv}{(u+v)}$



Fig. 4.1

Plan an experiment to investigate the relationship between the thickness t and the focal length f of converging lenses. You may add to Fig. 4.1 as part of your answer. You are **not** required to carry out this experiment.

The following apparatus is available to the student:

illuminated object
selection of lenses of different thicknesses and a lens holder
screen
metre rule
30 cm ruler
two rectangular wooden blocks with the longest sides longer than the diameter of the lenses.

In your plan, you should:

- draw a diagram to show the arrangement of the apparatus, labelling u and v
- explain briefly how you would carry out the investigation, including the measurements you would take
- explain briefly how you would determine the thickness t of each lens (you may draw a diagram if it helps your explanation)
- draw a suitable table, with column headings, to show how you would display your readings (you do **not** need to use the equation to calculate focal length).

© UCLES 2019

.....

.....

.....

BLANK PAGE

Permission to reproduce items where third-party owned material protected by copyright is included has been sought and cleared where possible. Every reasonable effort has been made by the publisher (UCLES) to trace copyright holders, but if any items requiring clearance have unwittingly been included, the publisher will be pleased to make amends at the earliest possible opportunity.

To avoid the issue of disclosure of answer-related information to candidates, all copyright acknowledgements are reproduced online in the Cambridge Assessment International Education Copyright Acknowledgements Booklet. This is produced for each series of examinations and is freely available to download at www.cambridgeinternational.org after the live examination series.

Cambridge Assessment International Education is part of the Cambridge Assessment Group. Cambridge Assessment is the brand name of the University of Cambridge Local Examinations Syndicate (UCLES), which itself is a department of the University of Cambridge.

© UCLES 2019