Cambridge IGCSE

Cambridge Assessment International Education
Cambridge International General Certificate of Secondary Education

CANDIDATE NAME									
CENTRE NUMBER						CANDIDATE NUMBER				

PHYSICS **0625/53**

Paper 5 Practical Test **May/June 2019**

1 hour 15 minutes

Candidates answer on the Question Paper.

Additional Materials: As listed in the Confidential Instructions.

READ THESE INSTRUCTIONS FIRST

Write your centre number, candidate number and name in the spaces at the top of the page.
Write in dark blue or black pen.
You may use an HB pencil for any diagrams or graphs.
Do not use staples, paper clips, glue or correction fluid.
DO **NOT** WRITE IN ANY BARCODES.

Answer **all** questions.
You are advised to spend about 20 minutes on each of questions 1 to 3, and 15 minutes on question 4.
Electronic calculators may be used.
You may lose marks if you do not show your working or if you do not use appropriate units.

At the end of the examination, fasten all your work securely together.
The number of marks is given in brackets [ ] at the end of each question or part question.

For Examiner's Use	
1	
2	
3	
4	
Total	

This syllabus is regulated for use in England, Wales and Northern Ireland as a Cambridge International Level 1/Level 2 Certificate.

This document consists of **11** printed pages and **1** blank page.

© UCLES 2019

1 In this experiment, you will determine the mass of a block U by a balancing method.

Carry out the following instructions, referring to Fig. 1.1.

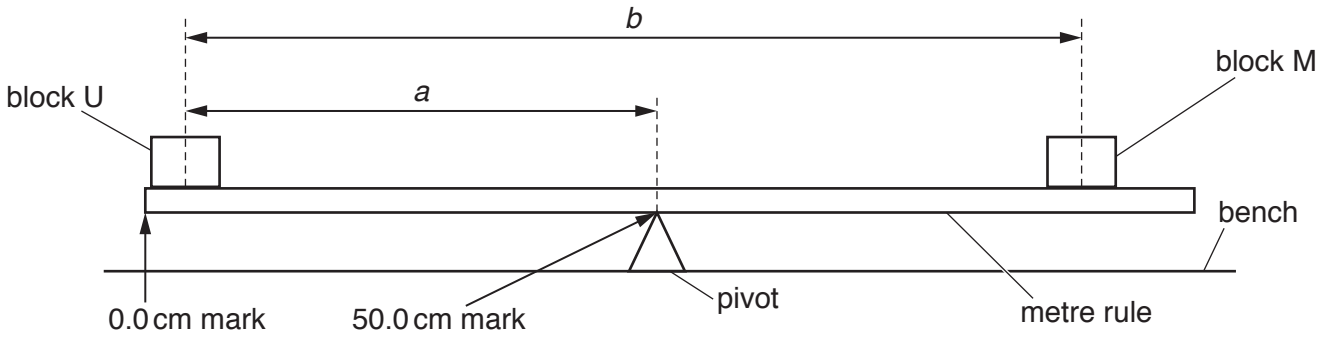

Fig. 1.1

(a) Place the metre rule with the pivot below the 50.0 cm mark. **The pivot must stay in this position for the duration of the experiment.**

View solution

Place block U on the metre rule with its centre at the 5.0 cm mark.

Place block M on the metre rule on the other side of the pivot as shown in Fig. 1.1. Adjust the position of block M until the metre rule is as near to being balanced as possible.

The distance *a* between the centre of block U and the 50.0 cm mark has been recorded in Table 1.1.

In Table 1.1, record the position of block M.

Calculate the distance *b* between the centre of block U and the centre of block M, using the equation:

$$b = \text{(position of block M} - \text{position of block U)}.$$

Repeat the procedure for positions of block U at the 10.0 cm, 15.0 cm, 20.0 cm and 25.0 cm marks.

Table 1.1

position of block U / cm	*a* / cm	position of block M / cm	*b* / cm
5.0	45.0		
10.0	40.0		
15.0	35.0		
20.0	30.0		
25.0	25.0		

[2]

© UCLES 2019

(b) Plot a graph of b/cm (y-axis) against a/cm (x-axis). You do not need to start the axis at the origin (0,0).

View solution

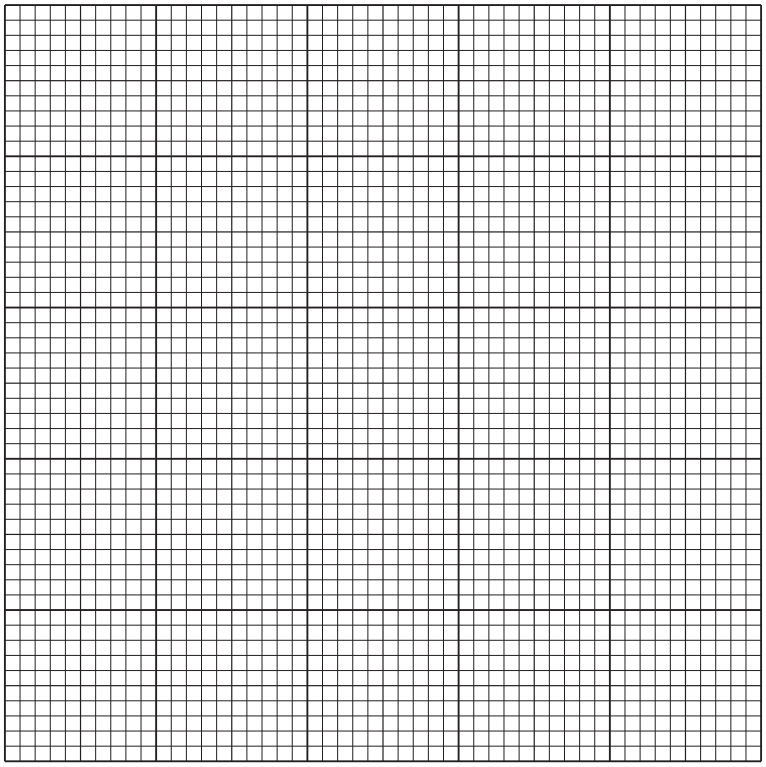

[4]

(c) **(i)** Determine the gradient G of the graph. Show clearly on the graph how you obtained the necessary information.

View solution

G = ... [1]

(ii) Calculate the mass M_U of block U using the equation $M_U = (G - 1) \times k$, where $k = 200\,g$.

View solution

Record the value of M_U to a suitable number of significant figures for this experiment.

M_U = ... [2]

© UCLES 2019

(d) Describe why it is difficult to place the block U at the correct mark on the metre rule each time. Explain how you overcame this difficulty. You may draw a diagram.

View solution

.....

.....

..... [1]

(e) It is difficult to balance the metre rule in this type of experiment.
Describe how to adjust the position of block M on the metre rule until the metre rule is as close to balance as possible.
You may draw a diagram if it helps your explanation.

View solution

.....

.....

..... [1]

[Total: 11]

© UCLES 2019

2 In this experiment, you will investigate the transfer of thermal energy between hot water in a beaker and cold water in a glass tube.

Carry out the following instructions, referring to Fig. 2.1.

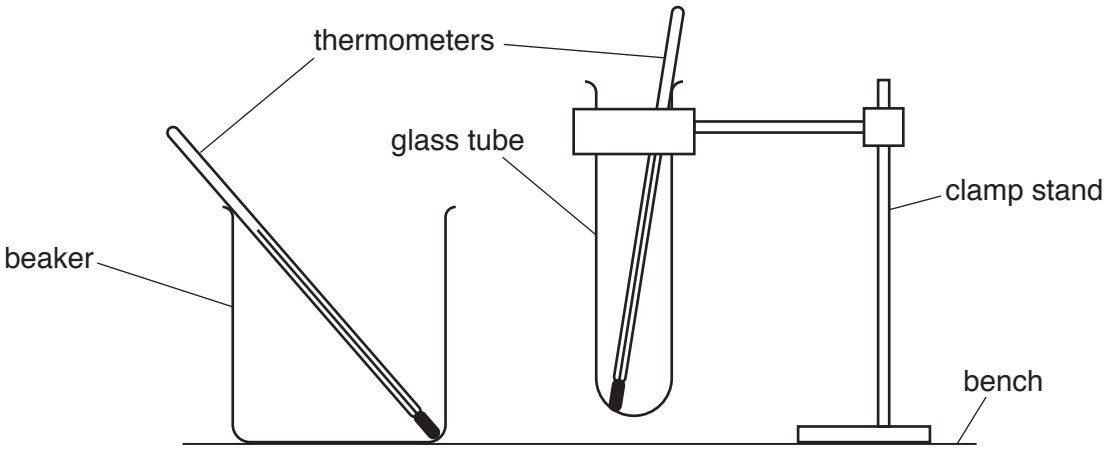

Fig. 2.1

The glass tube must remain in the clamp throughout the experiment.

(a) Use one of the thermometers to measure the room temperature θ_R.

View solution

θ_R = ... [1]

(b) Pour 50 cm^3 of cold water into the glass tube.

View solution

Pour 300 cm^3 of hot water into the beaker.

In the first row of Table 2.1, for $t = 0$, record the temperature θ_C of the water in the glass tube and the temperature θ_H of the water in the beaker.

Place the glass tube in the beaker and immediately start the stopclock.

Record, in Table 2.1, the temperatures θ_C of the water in the glass tube and the temperatures θ_H of the water in the beaker at times $t = 30$ s, 60 s, 90 s, 120 s, 150 s and 180 s.

[3]

© UCLES 2019

Table 2.1

	glass tube	beaker
t /	θ_C /	θ_H /
0		

(c) Complete the headings and the time column in the table. View solution [2]

(d) **(i)** State what you expect the temperature of the water in the glass tube will be when θ_C stops rising.
Justify your answer by reference to your readings. View solution

statement .....

justification .....

.....

.....
[2]

(ii) State what you expect the temperature θ_H of the water in the beaker will be after a few hours.

θ_H = ... [1]

(e) Suggest **two** changes that could be made to the apparatus or the procedure to ensure that the temperature θ_C of the cold water in the glass tube rises more quickly.

1. .....

.....

.....

2. .....

.....

.....
[2]

[Total: 11]

© UCLES 2019

3 In this experiment, you will investigate a circuit containing different resistors.

The circuit has been set up for you.
Carry out the following instructions, referring to Fig. 3.1.

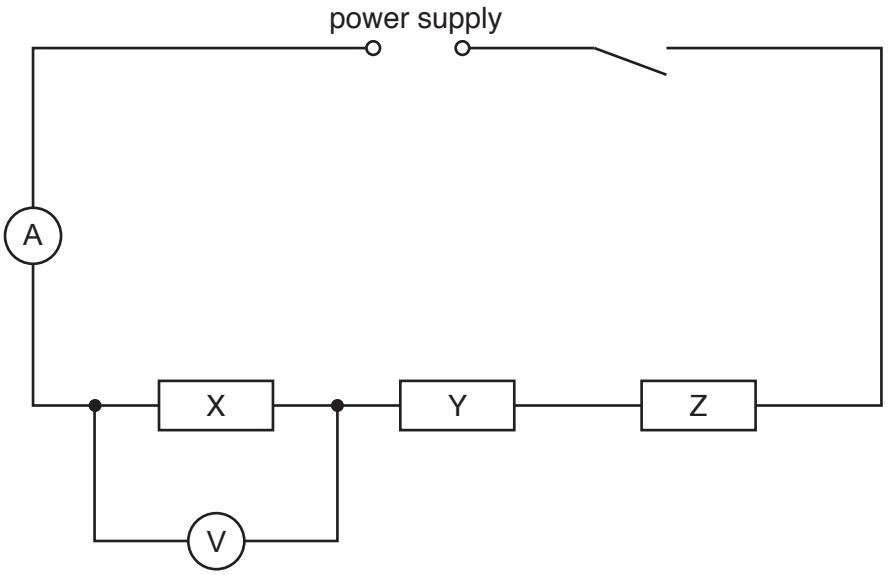

Fig. 3.1

View solution

(a) Switch on.

Measure, and record in Table 3.1, the current I in the circuit.

Use the voltmeter to measure and record the potential difference V across resistor X.

Table 3.1

resistor combination	I/	V/	R/
X			
X and Y			
X, Y and Z			

[1]

(b) Disconnect the voltmeter.

Connect the voltmeter to measure the potential difference V across the combination of resistors X and Y.

Measure, and record in Table 3.1, the current I in the circuit and the potential difference V across the combination of resistors X and Y.

[1]

View solution

(c) (i) Disconnect the voltmeter.

Connect the voltmeter to measure the potential difference V across the combination of resistors X, Y and Z.

Measure, and record in Table 3.1, the current I in the circuit and the potential difference V across the combination of resistors X, Y and Z.

View solution

Switch off.

Complete the headings in Table 3.1. [1]

(ii) A student suggests that the current should remain constant when the voltmeter is used to measure potential differences across the different combinations of resistors.

View solution

State whether your readings support this suggestion.

Justify your answer by reference to your readings.

statement .....

justification .....

.....

.....

[1]

(d) (i) Calculate, and record in Table 3.1, the resistance R of each combination of resistors.
Use your readings from Table 3.1 and the equation $R = \frac{V}{I}$.

View solution

[2]

(ii) For resistors in series, the total resistance of the combination is the sum of the individual resistances.
Use your results from Table 3.1 to calculate the resistances R_Y and R_Z of resistors Y and Z.

R_Y = ...

R_Z = ...

[1]

View solution

(e) The circuit components are to be rearranged so that

View solution

- resistors X, Y and Z are in parallel
- the ammeter will measure the current in the circuit
- the voltmeter will measure the potential difference across the resistors.

In the space below, draw a diagram of this circuit.

[2]

(f) Set up the circuit as described in **(e)**.

Switch on. Measure and record the current I_P in the circuit and the potential difference V_P across the resistors.

I_P = ...

V_P = ...

Switch off.

Calculate the resistance R_P of the resistors in parallel. Use your readings and the equation $R_P = \frac{V_P}{I_P}$.

View solution

R_P = ...

[2]

[Total: 11]

© UCLES 2019

4 A student wants to investigate the factors that affect the height to which a ball bounces when it is dropped.

Plan an experiment that will enable him to investigate in detail how the height from which a ball is dropped affects how high it bounces.


View solution

You are **not** required to carry out the experiment.

The apparatus available includes:

balls of different materials and sizes
sheets of different floor coverings.

Write a plan for the experiment.

In your plan, you should:

- list any additional apparatus needed
- explain briefly how you would carry out the experiment
- describe a precaution which could be taken to ensure that measurements of the height of bounce are reliable
- state the key variables that you would control
- draw a table, with column headings, to show how you would display your readings (you are **not** required to enter any readings in the table)
- explain how you could analyse your readings to reach a conclusion.

You may draw a diagram if it helps to explain your plan.

.....

.....

.....

.....

© UCLES 2019

.....

.....

.....

.....

.....

.....

.....

.....

.....

.....

.....

.....

.....

.....

.....

.....

.....

.....

.....

..... [7]

[Total: 7]

© UCLES 2019

BLANK PAGE

Permission to reproduce items where third-party owned material protected by copyright is included has been sought and cleared where possible. Every reasonable effort has been made by the publisher (UCLES) to trace copyright holders, but if any items requiring clearance have unwittingly been included, the publisher will be pleased to make amends at the earliest possible opportunity.

To avoid the issue of disclosure of answer-related information to candidates, all copyright acknowledgements are reproduced online in the Cambridge Assessment International Education Copyright Acknowledgements Booklet. This is produced for each series of examinations and is freely available to download at www.cambridgeinternational.org after the live examination series.

Cambridge Assessment International Education is part of the Cambridge Assessment Group. Cambridge Assessment is the brand name of the University of Cambridge Local Examinations Syndicate (UCLES), which itself is a department of the University of Cambridge.

© UCLES 2019