Cambridge IGCSE

**Cambridge Assessment International Education**
Cambridge International General Certificate of Secondary Education

| | | | | | | | | | |
|---|---|---|---|---|---|---|---|---|---|
| CANDIDATE NAME | | | | | | | | | |
| CENTRE NUMBER | | | | | | CANDIDATE NUMBER | | | | |

**PHYSICS** **0625/61**

Paper 6 Alternative to Practical **May/June 2019**

**1 hour**

Candidates answer on the Question Paper.

No Additional Materials are required.

**READ THESE INSTRUCTIONS FIRST**

Write your centre number, candidate number and name on all the work you hand in.
Write in dark blue or black pen.
You may use an HB pencil for any diagrams or graphs.
Do not use staples, paper clips, glue or correction fluid.
DO **NOT** WRITE IN ANY BARCODES.

Answer **all** questions.
Electronic calculators may be used.
You may lose marks if you do not show your working or if you do not use appropriate units.

At the end of the examination, fasten all your work securely together.
The number of marks is given in brackets [ ] at the end of each question or part question.

This syllabus is regulated for use in England, Wales and Northern Ireland as a Cambridge International Level 1/Level 2 Certificate.

This document consists of **12** printed pages.

© UCLES 2019

**1** A student is determining the weight of a metre rule using a balancing method.

Fig. 1.1 shows the apparatus.

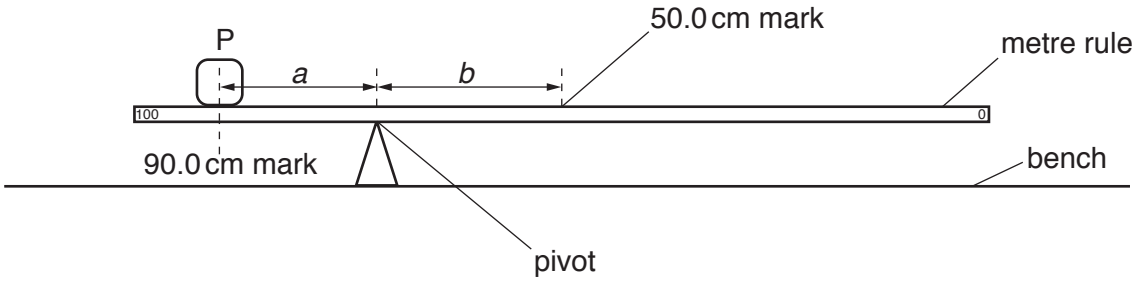


**Fig. 1.1**

The student places the metre rule on the pivot. He places the load P on the metre rule at the 90.0 cm mark. Keeping load P at the 90.0 cm mark, he adjusts the position of the metre rule on the pivot so that the metre rule is as near as possible to being balanced.

He records the distance *a* from the 90.0 cm mark to the pivot.

He records the distance *b* from the pivot to the 50.0 cm mark.

He repeats the steps, placing the load P at the 85.0 cm, the 80.0 cm, the 75.0 cm and the 70.0 cm marks.

The readings are shown in Table 1.1.

**Table 1.1**

| *a*/cm | *b*/cm |
|---|---|
| 21.0 | 19.1 |
| 18.0 | 17.2 |
| 16.0 | 14.1 |
| 13.0 | 11.8 |
| 10.5 | 9.5 |

© UCLES 2019

**(a)** Plot a graph of $a$/cm ($y$-axis) against $b$/cm ($x$-axis). You do **not** need to begin your axes at the origin (0,0).

View solution

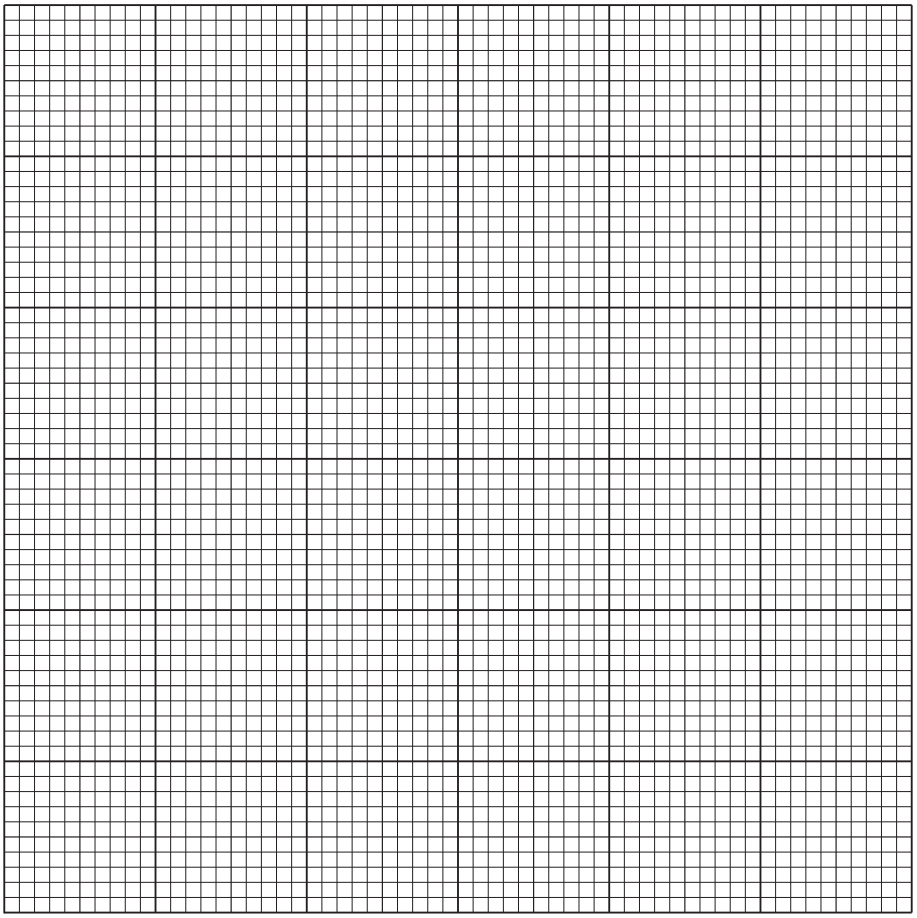

[4]

**(b)** Determine the gradient $G$ of the graph. Show clearly on the graph how you obtained the necessary information.

View solution

$G$ = ..... [2]

**(c)** Calculate the weight $W_1$ of the metre rule using the equation $W_1 = G \times P$, where $P = 1.0\,\text{N}$.

View solution

$W_1$ = ..... [2]

**(d)** Suggest **one** practical reason why it is difficult to obtain accurate readings for $a$ and $b$ in this type of experiment.

.....

..... [1]

© UCLES 2019

**(e)** The student measures the mass of the rule on a balance. Write down the mass $m$ shown on the balance in Fig. 1.2 to the nearest gram.

View solution

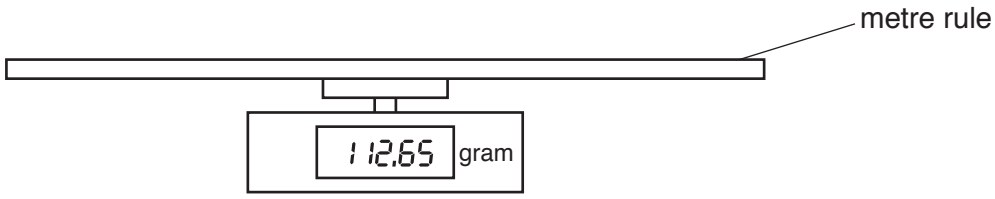


**Fig. 1.2**

$m$ = ..... g [1]

**(f)** **(i)** Calculate the weight $W_2$ of the metre rule using the equation $W_2 = mg$, where $g = 10.0\,\text{N/kg}$.

$W_2$ = ..... N [1]

**(ii)** State and explain whether this value of $W_2$ can be considered equal to the value of $W_1$ obtained in part **(c)** within the limits of experimental accuracy.

.....

..... [1]

[Total: 12]

View solution

**2** A student is determining the resistance of a resistance wire.

The circuit is shown in Fig. 2.1.

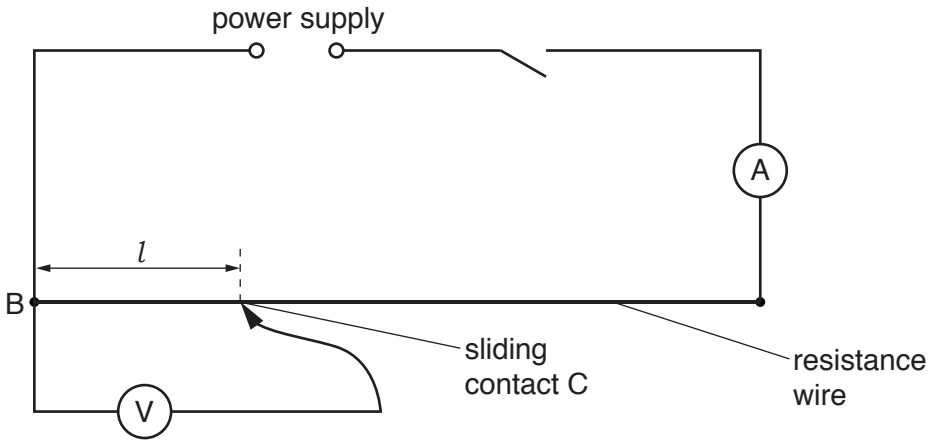


**Fig. 2.1**

**(a)** Record the current $I$ in the circuit, as shown on the ammeter in Fig. 2.2.

View solution

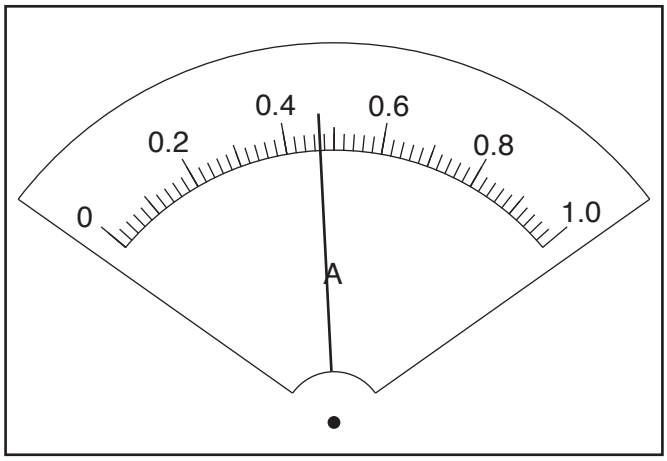


**Fig. 2.2**

$I$ = ..... [1]

**(b)** The student places the sliding contact C at a distance $l$ = 20.0 cm from B.

She records the potential difference $V$ across the length $l$ of the resistance wire.

She repeats the procedure using $l$ values of 40.0 cm, 60.0 cm, 80.0 cm and 100.0 cm. All the readings are shown in Table 2.1.

Calculate, and record in Table 2.1, $\frac{V}{l}$ for each value of $l$.

Complete the $\frac{V}{l}$ column heading.

**Table 2.1**

| $l$/cm | $V$/V | $\frac{V}{l}$ / |
|---|---|---|
| 20.0 | 0.50 | |
| 40.0 | 0.92 | |
| 60.0 | 1.62 | |
| 80.0 | 2.08 | |
| 100.0 | 2.40 | |

[3]

**(c)** Look carefully at the values of $\frac{V}{l}$ in Table 2.1.

**(i)** Tick the box to show your conclusion from the results.

☐ $\frac{V}{l}$ is approximately constant.

☐ $\frac{V}{l}$ is decreasing as $V$ increases.

☐ $\frac{V}{l}$ is increasing as $V$ increases.

☐ There is no simple pattern for $\frac{V}{l}$ in the results.

[1]

**(ii)** Justify your conclusion by reference to your results.

.....

..... [1]

**(d)** Calculate the resistance of 100 cm of the resistance wire using the equation $R = \frac{V}{I}$, where $V$ is the potential difference across 100 cm of the resistance wire. Use the value of current $I$ from part **(a)**. Give your answer to a suitable number of significant figures for this experiment and include the unit.

View solution

$R$ = ..... [3]

**(e)** In this type of experiment, it is sensible to keep the temperature of the resistance wire as close to room temperature as possible. Suggest **one** way to minimise the rise in temperature of the resistance wire.

.....

..... [1]

**(f)** Draw the circuit symbol for a variable resistor.

View solution

[1]

[Total: 11]

© UCLES 2019

**3** A student is investigating the rate of cooling of water under different conditions. A greater rate of cooling occurs if there is a greater change in the temperature during the same period of time.

Fig. 3.1 shows some of the apparatus.

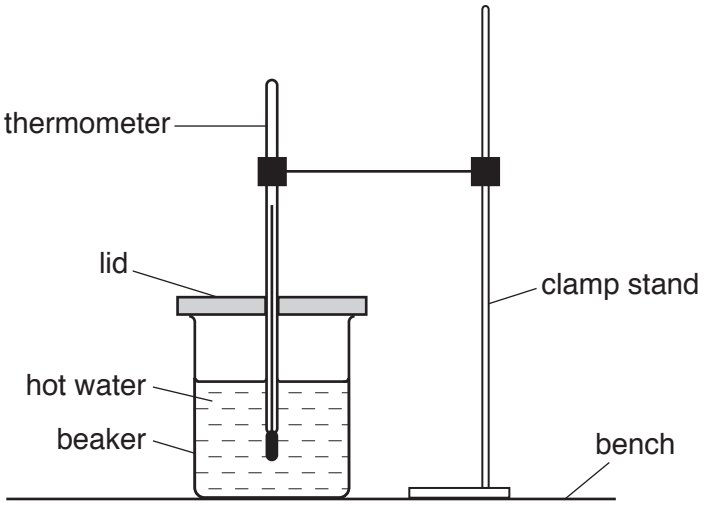


**Fig. 3.1**

**(a)** The thermometer in Fig. 3.2 shows the room temperature $\theta_R$ at the beginning of the experiment. Record $\theta_R$.

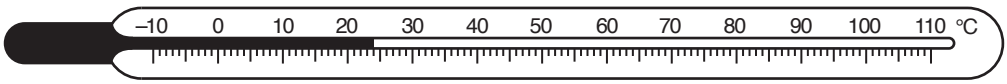


View solution

**Fig. 3.2**

$\theta_R$ = ..... [1]

**(b)** The student pours 200 $cm^3$ of hot water into the beaker.

She records the temperature $\theta$ of the hot water at time $t$ = 0. She immediately starts a stopclock.

She continues recording the time and the temperature readings every 30 s. The readings are shown in Table 3.1.

**Table 3.1**

beaker

| *t*/ | *θ*/ |
|---|---|
| 0 | 94 |
| 30 | 93 |
| 60 | 92 |
| 90 | 91 |
| 120 | 90 |
| 150 | 89 |

**Table 3.2**

can

| *t*/ | *θ*/ |
|---|---|
| 0 | 93 |
| 30 | 91 |
| 60 | 90 |
| 90 | 89 |
| 120 | 88 |
| 150 | 87 |

The student repeats the procedure using a metal can, painted matt black, in place of the beaker.

The readings are shown in Table 3.2.

**(i)** Complete the column headings in Table 3.1 and in Table 3.2. [1]

**(ii)** Look carefully at the readings in Table 3.1 and in Table 3.2.

View solution

Tick the box to show your conclusion from the readings.

☐ The water in the beaker has a greater rate of cooling than the water in the can.

☐ The water in the beaker has a smaller rate of cooling than the water in the can.

☐ There is no significant difference between the rates of cooling of the water in the beaker and the can.

[1]

**(iii)** Justify your conclusion by reference to the readings.

.....

.....

.....

..... [2]

**(c)** A student in another school carries out the experiment and reports that the rate of cooling of the water in the can is different from the rate of cooling of the water in the beaker. He plans a change to the experiment to find out whether this difference in the rates of cooling is caused by

- the matt black surface of the can being a better radiator of thermal energy than the shiny surface of the beaker
- the metal of the can being a better conductor of thermal energy than the material of the beaker.

View solution

**(i)** Suggest **two** suitable changes to the apparatus that the student could make.

1. .....

.....

2. .....

.....

[2]

**(ii)** Suggest **two** variables that should be controlled in order to make the experiment a fair test.

1. .....

.....

2. .....

.....

[2]

**(d)** State **one** precaution that you would take in order to record accurate temperature readings.

.....

..... [1]

[Total: 10]

View solution

© UCLES 2019

**4** A student is investigating the work required to pull a box containing some masses up a sloping wooden board. Fig. 4.1 shows the board and the box.

Plan an experiment to investigate how the work required to pull the box up the slope depends on the mass of the box and its contents.

View solution

Work done is calculated using the equation:

work done = force × distance moved in the direction of the force.

The following apparatus is available to the students:

a wooden board
a box with a length of string attached
a selection of masses that fit in the box
a metre rule
an electronic balance.

In your plan, you should:

- list any other apparatus that you would use
- explain briefly how you would carry out the investigation, including the measurements you would take
- state the key variables that you would control
- draw a suitable table, with column headings, to show how you would display your readings (you are **not** required to enter any readings in the table)
- explain how you would use the results to reach a conclusion.

You may add to the diagram if it helps your explanation.

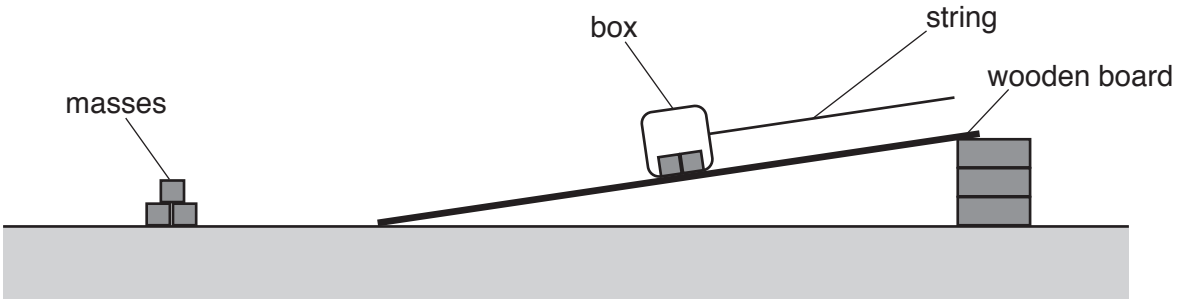


**Fig. 4.1**

.....

.....

.....