Cambridge IGCSE

Cambridge Assessment International Education
Cambridge International General Certificate of Secondary Education

CANDIDATE NAME									
CENTRE NUMBER						CANDIDATE NUMBER			

PHYSICS **0625/62**

Paper 6 Alternative to Practical **May/June 2019**

1 hour

Candidates answer on the Question Paper.

No Additional Materials are required.

READ THESE INSTRUCTIONS FIRST

Write your centre number, candidate number and name on all the work you hand in.
Write in dark blue or black pen.
You may use an HB pencil for any diagrams or graphs.
Do not use staples, paper clips, glue or correction fluid.
DO **NOT** WRITE IN ANY BARCODES.

Answer **all** questions.
Electronic calculators may be used.
You may lose marks if you do not show your working or if you do not use appropriate units.

At the end of the examination, fasten all your work securely together.
The number of marks is given in brackets [ ] at the end of each question or part question.

This syllabus is regulated for use in England, Wales and Northern Ireland as a Cambridge International Level 1/Level 2 Certificate.

This document consists of **12** printed pages.

© UCLES 2019

1 A student is investigating moments using a balancing method.

Fig. 1.1 shows the apparatus.

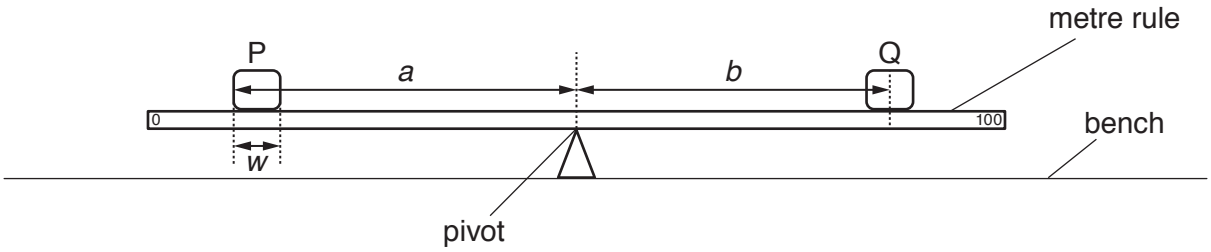

Fig. 1.1

View solution

(a) The student places the metre rule, without the loads, on the pivot and adjusts its position so that the metre rule is as near as possible to being balanced. She keeps the rule at this position on the pivot throughout the experiment.

Explain briefly why this position on the pivot may not be exactly at the 50.0 cm mark of the rule.

.....

..... [1]

(b) She places a load P on the metre rule so that the **edge** that is furthest from the pivot is exactly at the 10.0 cm mark on the rule.

She measures the distance *a* between this **edge** of the load P and the pivot, as shown in Fig. 1.1.

She places a load Q on the metre rule and adjusts the position of load Q so that the metre rule is as near as possible to being balanced.

She measures the distance *b* between the **centre** of load Q and the pivot, as shown in Fig. 1.1.

She repeats the procedure, with the **edge** of the load P that is furthest from the pivot at the 15.0 cm, 20.0 cm, 25.0 cm and 30.0 cm marks. All the readings are shown in Table 1.1.

View solution

Table 1.1

a/cm	*b*/cm
38.0	44.5
33.0	38.5
28.0	33.6
23.0	27.2
18.0	22.0

© UCLES 2019

Plot a graph of a/cm (y-axis) against b/cm (x-axis). Start both axes at the origin (0,0).

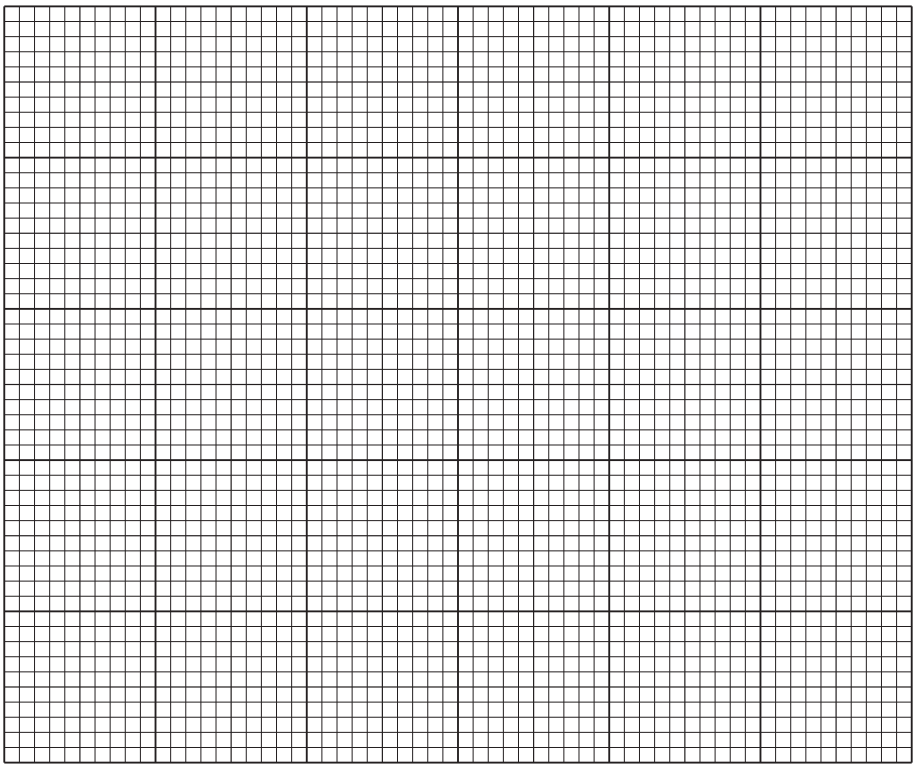

[4]

(c) Determine the gradient G of the graph. Show clearly on the graph how you obtained the necessary information.

View solution

G = ... [2]

(d) Determine the intercept C on the x-axis of the graph. This is the value of b when $a = 0$.

View solution

C = ... [1]

(e) On Fig. 1.2, measure the width w of the load P.

View solution

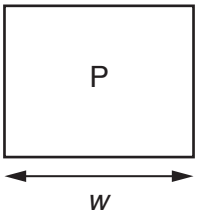

Fig. 1.2

w = ... [1]

(f) Another student suggests that the value of the intercept *C* should be equal to half the width *w* of the load P. State whether the results support the suggestion. Justify your answer by reference to the results.

statement .....

justification .....

.....

[2]

(g) Suggest **one** practical reason why it is difficult to obtain accurate values for *a* and for *b*.

View solution

.....

..... [1]

[Total: 12]

© UCLES 2019

2 A student is investigating the rate of cooling of water under different conditions. A greater rate of cooling occurs if there is a greater change in the temperature during the same period of time.

Fig. 2.1 and Fig. 2.2 show the apparatus used.

Beaker A has a lid. Beaker B is on a mat made of the same material as the lid. The mat and the lid have the same thickness.

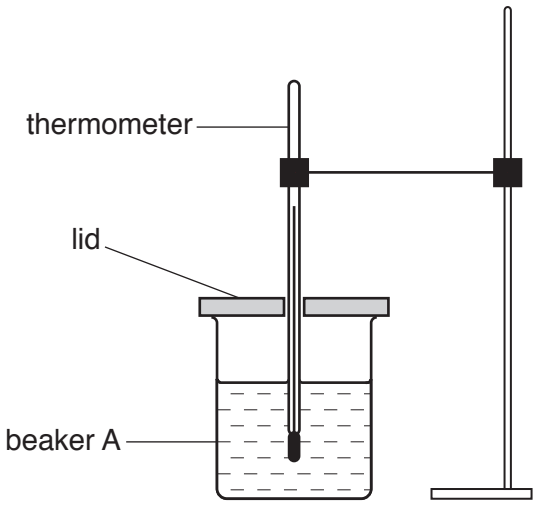

Fig. 2.1

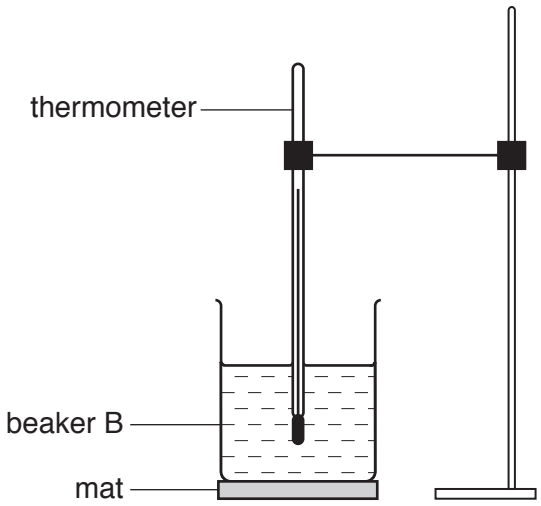

Fig. 2.2

(a) The thermometer in Fig. 2.3 shows the room temperature θ_R at the beginning of the experiment. Record θ_R.

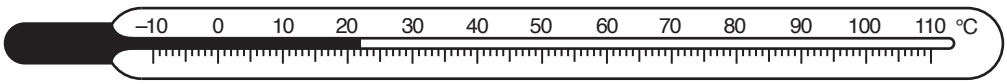

View solution

Fig. 2.3

θ_R = ... [1]

(b) The student pours 200 cm^3 of hot water into beaker A. He places the lid on the beaker and places the thermometer in the beaker, as shown in Fig. 2.1.

He records the temperature θ of the hot water at time t = 0. He immediately starts the stopclock.

He records the time and temperature readings every 30 s until he has six sets of readings.

He repeats the procedure using beaker B. This beaker is on a mat but has no lid.

All the readings are shown in Table 2.1 and Table 2.2.

Table 2.1

Beaker A, with lid	
t/	θ/
0	81
30	80
60	79
90	78
120	77
150	76

Table 2.2

Beaker B, on a mat	
t/	θ/
0	83
30	82
60	80
90	79
120	78
150	77

(i) Complete the column headings in Table 2.1 and in Table 2.2. [1]

(ii) Look carefully at the readings in Table 2.1 and in Table 2.2.

Tick the box to show your conclusion from the readings.

☐ The lid reduces the rate of cooling of the water significantly more than the mat reduces the rate of cooling of the water.

☐ The mat reduces the rate of cooling of the water significantly more than the lid reduces the rate of cooling of the water.

☐ There is no significant difference between the lid and the mat in reducing the rate of cooling of the water.

[1]

(iii) Justify your conclusion by reference to the readings.

.....

..... [2]

(c) A student plans to repeat the experiment using the same apparatus and the same volume of water. Suggest **one** change to the procedure that will decrease the rate of cooling of the water.

.....

..... [1]

(d) State **one** precaution that you must take in order to record accurate temperature readings.

.....

..... [1]

(e) Suggest **two** variables that must be controlled in order to make the experiment a fair test.

View solution

1. .....

.....

2. .....

.....

[2]

(f) It is important to view a measuring cylinder correctly to obtain an accurate value of the volume of a liquid. Tick the box that gives the best description of how to read a measuring cylinder.

View solution

- ☐ The line of sight should be along the scale.
- ☐ The line of sight should be vertical.
- ☐ The line of sight should be at right-angles to the scale.
- ☐ The line of sight should be parallel to the scale.

[1]

[Total: 10]

3 A student is investigating electrical resistance.

She uses the circuit shown in Fig. 3.1.

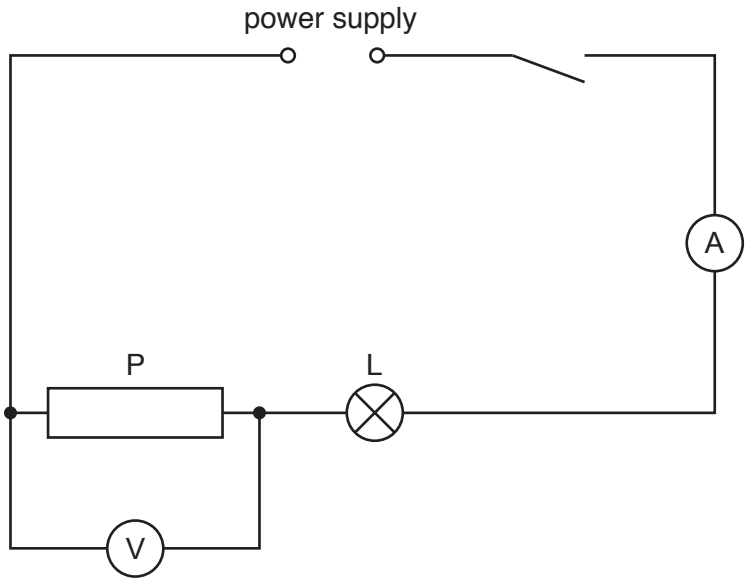

Fig. 3.1

(a) Write down the readings shown on the meters in Figs. 3.2 and 3.3.

View solution

V_1 = ...

I_1 = ...

[2]

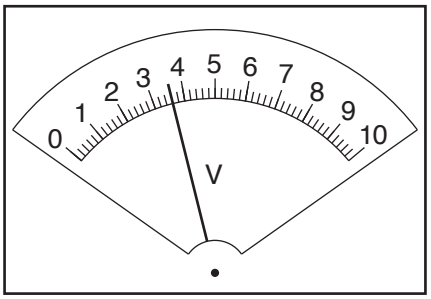

Fig. 3.2

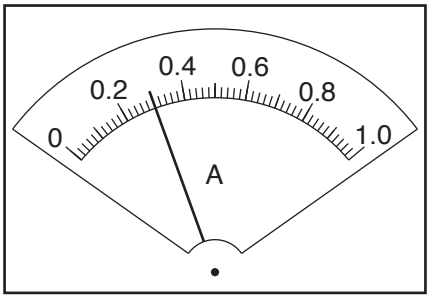

Fig. 3.3

(b) Calculate the resistance R_1 of the resistor P using the equation $R_1 = \frac{V_1}{I_1}$.

View solution

R_1 = ... [1]

(c) The student connects the voltmeter across the lamp L.

View solution

She records the potential difference V_2 across the lamp L.

V_2 = 2.4 V

Calculate the resistance R_2 of the lamp L using the equation $R_2 = \frac{V_2}{I_1}$.

R_2 = ... [1]

(d) The student replaces the resistor P with the resistor Q.

She records the potential difference V_3 across the resistor Q and the current I_2 in the circuit.

View solution

V_3 = 3.5 V

I_2 = 0.31 A

(i) Calculate the resistance R_3 of the resistor Q using the equation $R_3 = \frac{V_3}{I_2}$.

R_3 = ... [1]

(ii) State whether the results R_1 and R_3 suggest that resistor P and resistor Q have the same value of resistance, within the limits of experimental accuracy. Justify your statement by reference to your results.

statement .....

justification .....

.....

.....

[2]

View solution

(e) The student connects the voltmeter across the lamp L.

View solution

She records the potential difference V_4 across the lamp L.

V_4 = 2.5 V

She calculates the resistance R_4 of the lamp L.

R_4 = 8.1 Ω

She suggests that the change in resistance of the lamp from part **(c)** is due to a change in temperature of the lamp filament. Suggest an observation that she could make to confirm that the temperature of the lamp filament changes.

..... [1]

(f) Complete the circuit diagram in Fig. 3.4 to show that:

View solution

- the two resistors and the lamp are all connected in parallel
- the voltmeter is connected to measure the potential difference across the resistors and the lamp.

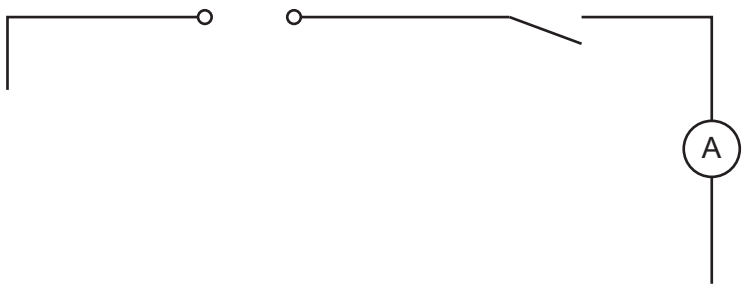

Fig. 3.4

[2]

(g) State the name of the circuit component that you would add to the circuit you have drawn to control the current in the circuit.

..... [1]

[Total: 11]

View solution

© UCLES 2019

4 A student is investigating the relationship between the thickness of a converging (convex) lens and its focal length. Fig. 4.1 shows the cross-section of a converging lens.

The focal length f of a lens can be calculated if u (the distance between the object and the lens) and v (the distance between the lens and the image on a screen) are known.

The equation is: $f = \frac{uv}{(u + v)}$

View solution



Fig. 4.1

Plan an experiment to investigate the relationship between the thickness t and the focal length f of converging lenses. You may add to Fig. 4.1 as part of your answer.

The following apparatus is available to the student:

illuminated object
selection of lenses of different thicknesses and a lens holder
screen
metre rule
30 cm ruler
two rectangular wooden blocks with the longest sides longer than the diameter of the lenses.

In your plan, you should:

- draw a diagram to show the arrangement of the apparatus, labelling u and v
- explain briefly how you would carry out the investigation, including the measurements you would take
- explain briefly how you would determine the thickness t of each lens (you may draw a diagram if it helps your explanation)
- draw a suitable table, with column headings, to show how you would display your readings (you do **not** need to use the equation to calculate focal length).

© UCLES 2019

.....

.....

.....