Cambridge IGCSE

Cambridge Assessment International Education
Cambridge International General Certificate of Secondary Education

CANDIDATE NAME									
CENTRE NUMBER						CANDIDATE NUMBER			

PHYSICS **0625/63**

Paper 6 Alternative to Practical **May/June 2019**

1 hour

Candidates answer on the Question Paper.

No Additional Materials are required.

READ THESE INSTRUCTIONS FIRST

Write your centre number, candidate number and name on all the work you hand in.
Write in dark blue or black pen.
You may use an HB pencil for any diagrams or graphs.
Do not use staples, paper clips, glue or correction fluid.
DO **NOT** WRITE IN ANY BARCODES.

Answer **all** questions.
Electronic calculators may be used.
You may lose marks if you do not show your working or if you do not use appropriate units.

At the end of the examination, fasten all your work securely together.
The number of marks is given in brackets [ ] at the end of each question or part question.

This syllabus is regulated for use in England, Wales and Northern Ireland as a Cambridge International Level 1/Level 2 Certificate.

This document consists of **12** printed pages.

© UCLES 2019

1 Some students are determining the mass of a block U by a balancing method.

They are using the apparatus shown in Fig. 1.1.

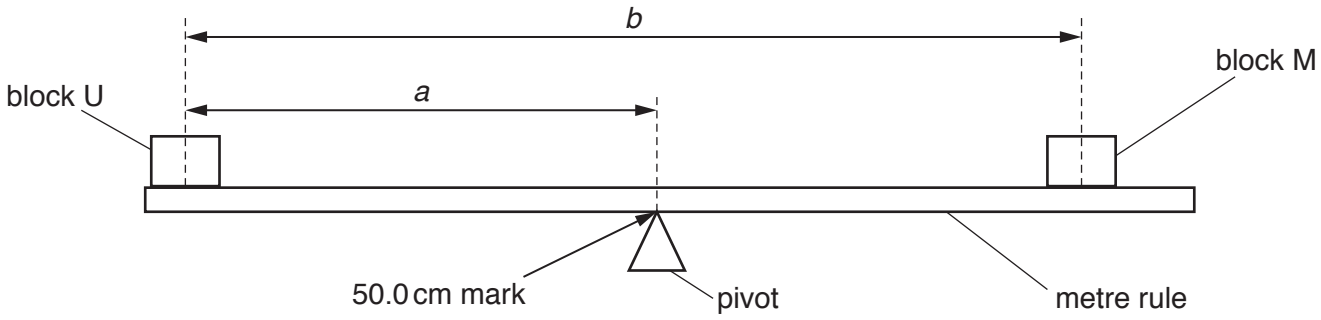

Fig. 1.1

(a) One student places the metre rule on the pivot at the 50.0 cm mark and then places block U with its centre at the 5.0 cm mark.
Suggest why it might be difficult to place block U accurately at the 5.0 cm mark. Explain how the student could overcome this difficulty. You may draw a diagram.

View solution

.....

.....

..... [1]

(b) **(i)** The student places block M on the metre rule as shown in Fig. 1.1 and adjusts the position of block M until the metre rule is as near to being balanced as possible.

Briefly describe a method to find the position at which the metre rule is as near to being balanced as possible.

View solution

.....

.....

.....

..... [1]

© UCLES 2019

(ii) The student determines the distance *a* between the centre of block U and the pivot. He also determines the distance *b* between the centre of block U and the centre of block M. He repeats the procedure for positions of block U at the 10.0 cm, 15.0 cm, 20.0 cm and 25.0 cm marks.
His results are shown in Table 1.1.

View solution

Table 1.1

position of block U / cm	*a* / cm	*b* / cm
5.0	45.0	65.5
10.0	40.0	59.0
15.0	35.0	51.8
20.0	30.0	45.0
25.0	25.0	38.6

Plot a graph of *b* / cm (*y*-axis) against *a* / cm (*x*-axis). You do not need to start the axes at the origin (0,0).

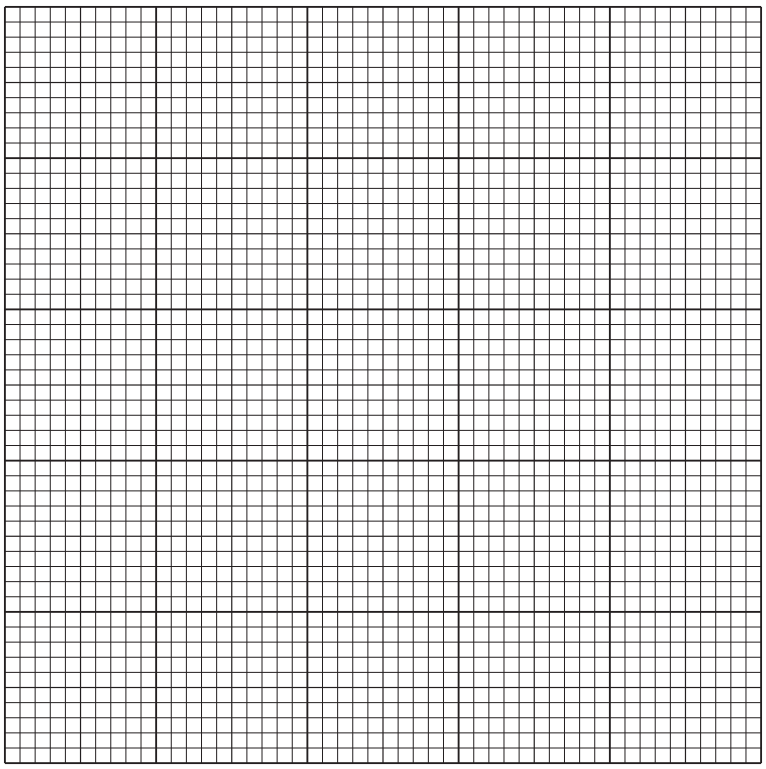

[4]

© UCLES 2019

(c) **(i)** Determine the gradient G of the graph. Show clearly on the graph how you obtained the necessary information.

View solution

G = ... [1]

(ii) Calculate the mass M_U of block U using the equation $M_U = (G - 1) \times k$, where $k = 200$ g.

View solution

Record the value of M_U to a suitable number of significant figures for this experiment.

M_U = ... [2]

(d) A student suggests that a and b are proportional.
State whether the results support this suggestion.
Justify your statement by reference to some results from Table 1.1.

View solution

statement .....

justification .....

.....

.....

[2]

[Total: 11]

© UCLES 2019

2 A student is investigating the transfer of thermal energy between hot water in a beaker and cold water in a glass boiling tube.

He is using the apparatus shown in Fig. 2.1.

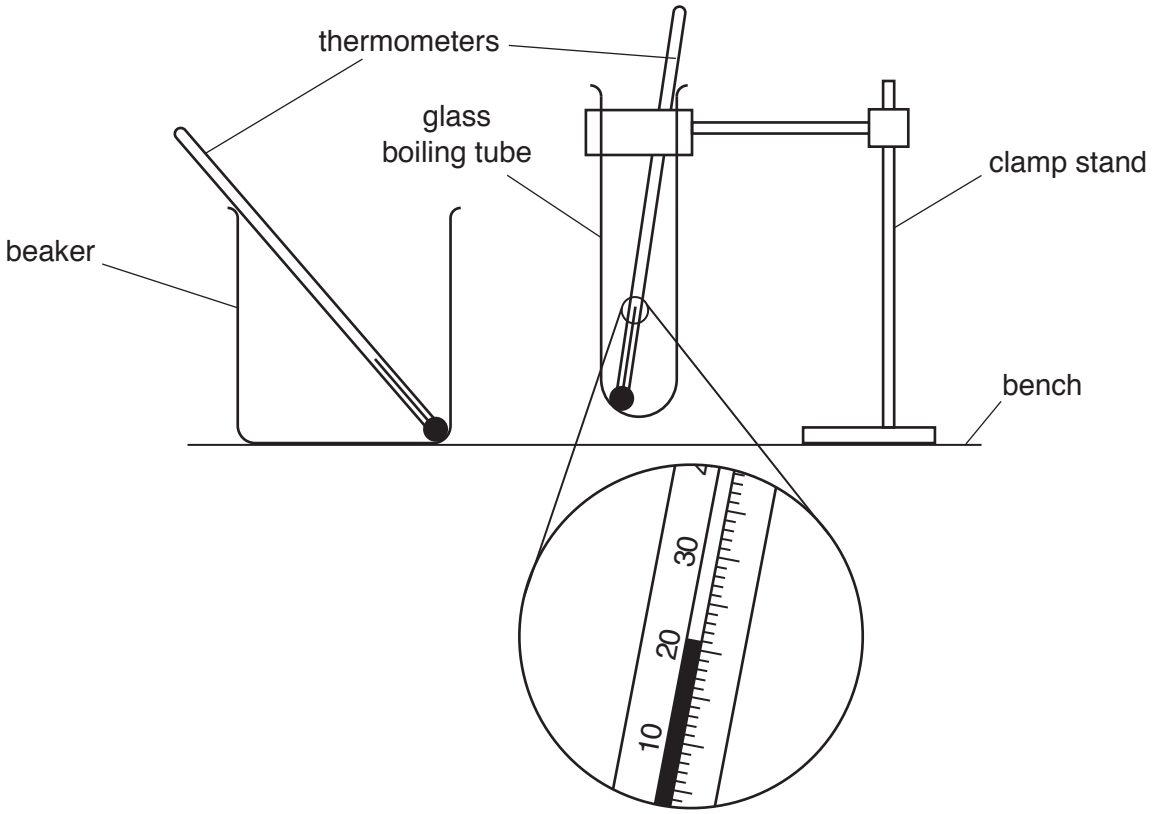

Fig. 2.1

(a) Record the room temperature θ_R, shown on the thermometer in the boiling tube.

View solution

θ_R = ... [1]

(b) The student pours cold water into the boiling tube and hot water into the beaker.
He places the boiling tube into the beaker of hot water.
He then records the temperatures θ_C of the water in the boiling tube and the temperatures θ_H of the water in the beaker every 30 s.

His readings are shown in Table 2.1.

View solution

(i) Complete the headings and the time column in Table 2.1. [2]

(ii) It is difficult to read both thermometers every 30 s.
Describe briefly a technique that would ensure the temperature readings are as accurate as possible in the experiment.

.....

.....

..... [1]

View solution

Table 2.1

	boiling tube	beaker	difference in temperature
t/	θ_C/	θ_H/	$(\theta_H - \theta_C)$/
0	19.5	88.5	69.0
	31.0	83.0	52.0
	39.5	80.0	40.5
	47.5	77.5	30.0
	54.0	75.5	21.5
	59.0	74.0	15.0
	63.0	73.0	10.0

(c) Write a conclusion stating how the difference in temperature between the cold water and the hot water affects the rate of heating of the water in the boiling tube.

Justify your answer by reference to the readings.

View solution

.....

.....

.....

..... [2]

© UCLES 2019

(d) **(i)** State what you expect the temperature in the boiling tube will be when θ_C stops rising. Justify your answer by reference to the readings.

statement .....

justification .....

.....

.....

[2]

(ii) State what you predict the temperature θ_H of the water in the beaker will be after a few hours.

View solution

θ_H = ... [1]

(e) Suggest **two** changes that could be made to the apparatus or the procedure to ensure that the temperature θ_C of the cold water in the boiling tube rises more quickly.

1. .....

.....

.....

2. .....

.....

.....

[2]

[Total: 11]

View solution

3 Some students are investigating a circuit containing different resistors.

They are using the circuit shown in Fig. 3.1.

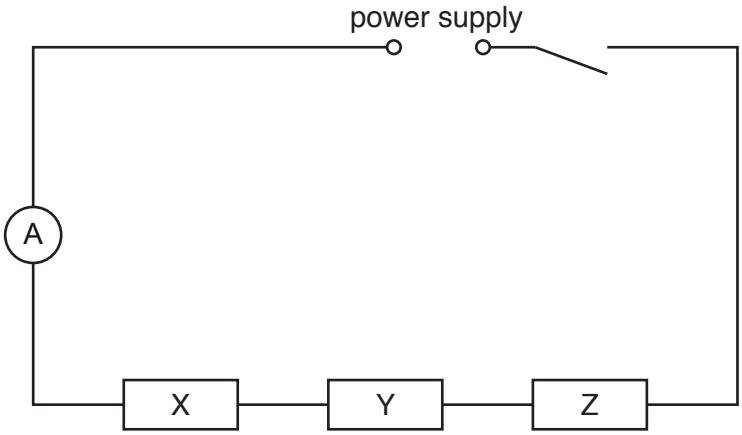

Fig. 3.1

View solution

(a) On Fig. 3.1, draw the symbol for a voltmeter connected to measure the potential difference V across resistor X. [1]

(b) A student connects the voltmeter as described in **(a)** and measures the current I in the circuit and the potential difference V across resistor X.

View solution

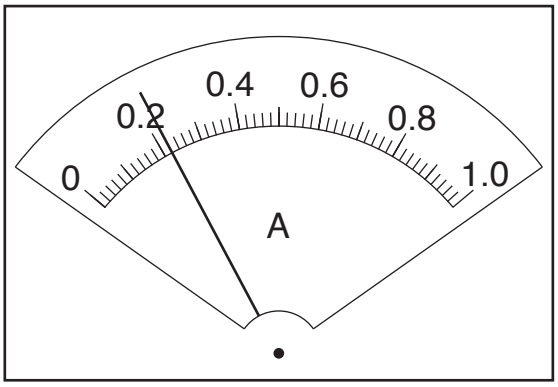

Fig. 3.2

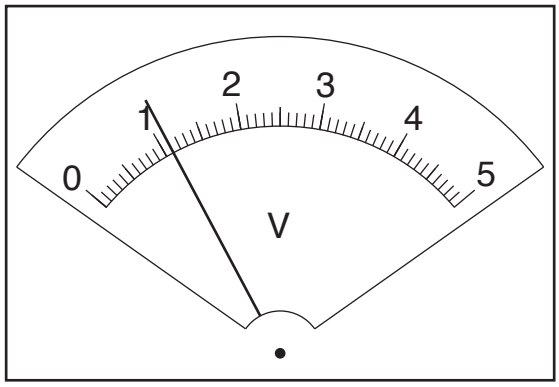

Fig. 3.3

Read, and record in Table 3.1, the values of I and V shown on the meters in Fig. 3.2 and in Fig. 3.3.

© UCLES 2019

Table 3.1

resistor combination	*I*/	*V*/	*R*/
X			
X and Y	0.23	3.3	
X, Y and Z	0.21	5.0	

The student connects the voltmeter to measure the potential difference *V* across the combination of resistors X and Y together and then X, Y and Z together.
Her readings are shown in Table 3.1.

Complete the headings in Table 3.1.

[3]

(c) A student suggests that the current should remain constant when the voltmeter is used to measure potential differences across the different combinations of resistors.
State whether the readings in Table 3.1 support this suggestion.
Justify your answer by reference to the readings.

View solution

statement .....

justification .....

.....

.....

[1]

(d) **(i)** Calculate, and record in Table 3.1, the resistance *R* of each combination of resistors.
Use the readings from Table 3.1 and the equation $R = \frac{V}{I}$.

View solution

[2]

(ii) For resistors in series, the total resistance of the combination is the sum of the individual resistances.
Use your results from Table 3.1 to calculate the resistances R_Y and R_Z of resistors Y and Z.

View solution

R_Y = ...

R_Z = ...

[1]

© UCLES 2019

(e) (i) The circuit components are to be rearranged so that

View solution

- resistors X, Y and Z are in parallel
- the ammeter will measure the current in the circuit
- the voltmeter will measure the potential difference across the resistors.

In the space below, draw a diagram of this circuit.

[2]

(ii) One student sets up the circuit as described in **(e)(i)**.
She measures the current I_P in the circuit and the potential difference V_P across the resistors.
She uses these values to calculate the resistance R_P of the resistors in parallel.

View solution

R_P = ... 2.31 ..... Ω

Use the student's result and your result from Table 3.1 to compare R_P with the resistance R_S of the three resistors connected in series.
Tick the box next to the description that most closely matches the results.

- ☐ $R_P = R_S$
- ☐ $R_P = 10R_S$
- ☐ $10R_P = R_S$
- ☐ None of these descriptions apply

[1]

[Total: 11]

© UCLES 2019

4 A student wants to investigate the factors that affect the height to which a ball bounces when it is dropped.

Plan an experiment that will enable him to investigate in detail how the height from which a ball is dropped affects how high it bounces.



The apparatus available includes:

balls of different materials and sizes
sheets of different floor coverings.

Write a plan for the experiment.

In your plan, you should:

- list any additional apparatus needed
- explain briefly how you would carry out the experiment
- describe a precaution which could be taken to ensure that measurements of the height of bounce are reliable
- state the key variables that you would control
- draw a table, with column headings, to show how you would display your readings (you are **not** required to enter any readings in the table)
- explain how you could analyse your readings to reach a conclusion.

You may draw a diagram if it helps to explain your plan.

.....

.....

.....

.....

.....

.....

.....

.....