Cambridge Assessment International Education

Cambridge IGCSE™

PHYSICS **0625/12**

Paper 1 Multiple Choice (Core) **May/June 2020**

45 minutes

You must answer on the multiple choice answer sheet.

You will need: Multiple choice answer sheet
Soft clean eraser
Soft pencil (type B or HB is recommended)

INSTRUCTIONS

- There are **forty** questions on this paper. Answer **all** questions.
- For each question there are four possible answers **A**, **B**, **C** and **D**. Choose the **one** you consider correct and record your choice in soft pencil on the multiple choice answer sheet.
- Follow the instructions on the multiple choice answer sheet.
- Write in soft pencil.
- Write your name, centre number and candidate number on the multiple choice answer sheet in the spaces provided unless this has been done for you.
- Do **not** use correction fluid.
- Do **not** write on any bar codes.
- You may use a calculator.
- Take the weight of 1.0 kg to be 10 N (acceleration of free fall = 10 m / s^2).

INFORMATION

- The total mark for this paper is 40.
- Each correct answer will score one mark. A mark will not be deducted for a wrong answer.
- Any rough working should be done on this question paper.

This document has **20** pages. Blank pages are indicated.

© UCLES 2020

1 Five athletes P, Q, R, S and T compete in a race. The table shows the finishing times for the athletes.

View solution

athlete	P	Q	R	S	T
finishing time / s	22.50	24.40	25.20	26.50	23.20

Which statement is correct?

A Athlete P won the race and was 0.70 s ahead of the athlete in second place.

B Athlete P won the race and was 1.90 s ahead of the athlete in second place.

C Athlete S won the race and was 1.30 s ahead of the athlete in second place.

D Athlete S won the race and was 2.10 s ahead of the athlete in second place.

2 The graph shows how the speed of an object varies with time.

View solution

At which labelled time is the acceleration greatest?

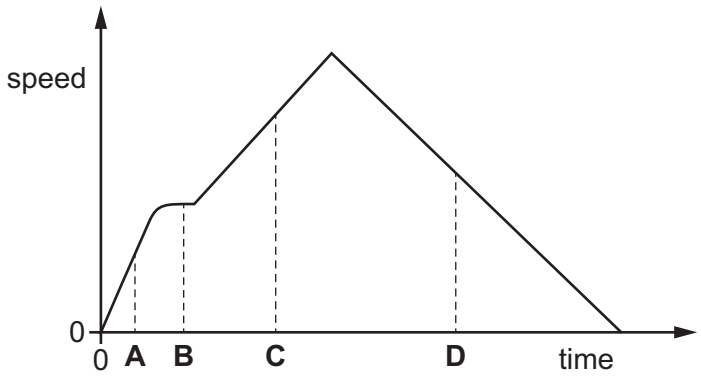

3 Which statement about acceleration is correct?

View solution

A It is related to the changing speed of an object.

B It is the distance an object travels in one second.

C It is the force acting on an object divided by the distance it travels in one second.

D It is the force acting on an object when it is near to the Earth.

© UCLES 2020

4 Two metal blocks P and Q have identical dimensions. They hang on identical spring balances.

View solution

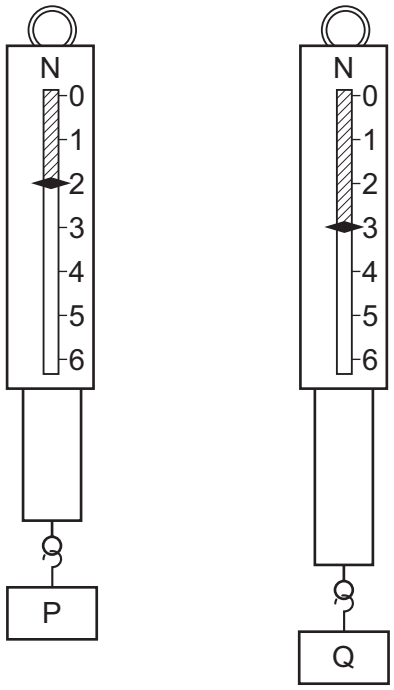

Which statement about P and Q is correct?

A They have different volumes and different weights.

B They have different volumes and equal weights.

C They have equal volumes and equal weights.

D They have equal volumes and different weights.

5 A space probe is taken from the Earth to Mars.

View solution

The force of gravity on the surface of Mars is less than the force of gravity on the surface of the Earth.

How do the weight and the mass of a space probe on the surface of Mars compare to their values when the probe is on the surface of the Earth?

	weight on Mars	mass on Mars
A	decreased	decreased
B	decreased	unchanged
C	unchanged	decreased
D	unchanged	unchanged

© UCLES 2020

6 Water has a density of 1000 kg / m^3.

View solution

A rectangular swimming pool has an average depth of 1.6 m.

The length of the pool is 25 m.

The width of the pool is 10 m.

What is the mass of the water in the swimming pool?

A 2.5 kg **B** 400 kg **C** 400 000 kg **D** 800 000 kg

7 The diagram shows an extension–load graph for a spring.

View solution

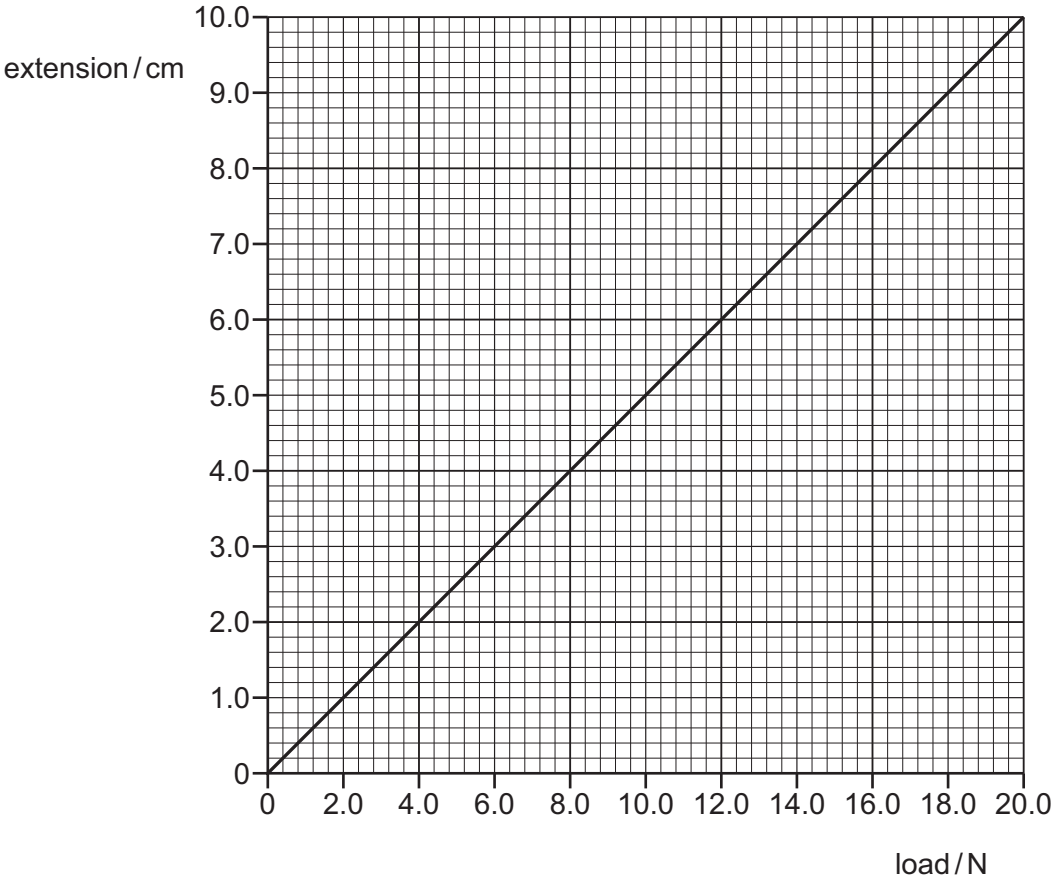

An empty can of weight 3.0 N is suspended from the spring.

Liquid is poured into the can until the extension is 8.0 cm.

What is the weight of the liquid?

A 4.0 N **B** 10.0 N **C** 13.0 N **D** 16.0 N

© UCLES 2020

8 What is meant by the moment of a force on an object?

View solution

A the magnitude of the force on the object

B the direction of the force on the object

C the time for which the force acts on the object

D the turning effect of the force on the object

9 Which energy resource is **not** renewable?

View solution

A geothermal

B nuclear fission

C solar

D wind

10 Two motors X and Y lift loads of the same weight through the same vertical distance.

View solution

Motor X is more efficient than motor Y.

Which statement about the motors is correct?

A The useful energy output of motor X is larger than that of motor Y.

B The useful energy output of motor X is smaller than that of motor Y.

C The energy input of motor X is larger than that of motor Y.

D The energy input of motor X is smaller than that of motor Y.

© UCLES 2020

11 A man can either take an escalator or a lift to travel up between two floors in a hotel.

View solution

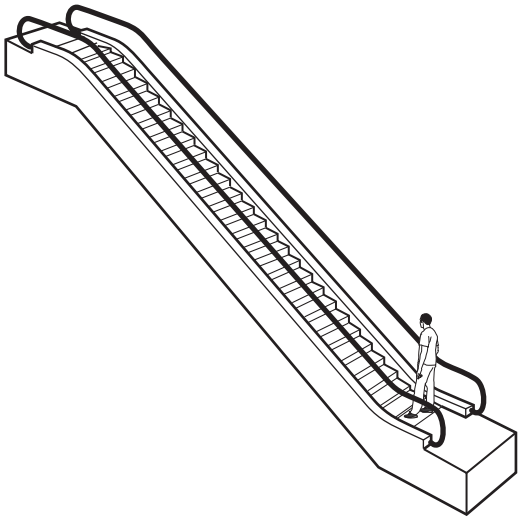

escalator

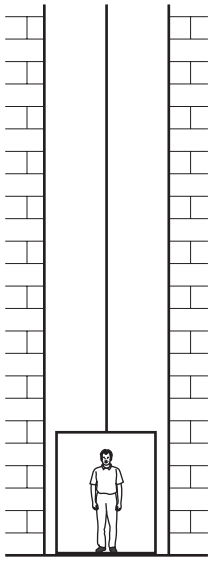

lift

The escalator takes 20 seconds to carry the man between the two floors. The useful work done against gravity is *W*. The useful power developed is *P*.

The lift takes 30 seconds to carry the same man between the same two floors.

How much useful work against gravity is done by the lift, and how much useful power is developed by the lift?

	useful work done against gravity by lift	useful power developed by lift
A	more than *W*	less than *P*
B	more than *W*	*P*
C	*W*	less than *P*
D	*W*	*P*

© UCLES 2020

12 The diagram shows a solid block resting on a bench. The dimensions of the block are shown.

View solution

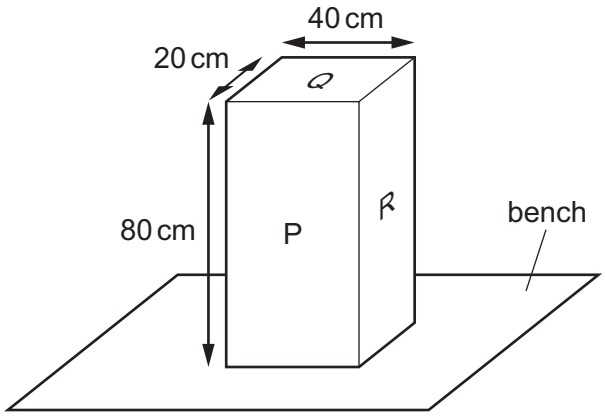

On which labelled surface should the block rest to produce the smallest pressure on the bench?

A P

B Q

C R

D P, Q and R produce the same pressure

13 A beaker contains a liquid.

View solution

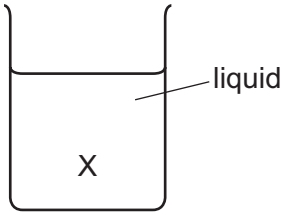

On what does the liquid pressure at position X depend?

A both the density of the liquid and the depth of X below the surface

B both the surface area of the liquid and the depth of X below the surface

C both the surface area of the liquid and the volume of the liquid

D the depth of X below the surface only

14 Evaporation occurs from the surface of a pool of water.

View solution

Which statement describes this change of state?

A Electrons move from the liquid and become a gas.

B Molecules that move from the liquid have the same energy as those that stay in the liquid.

C The more energetic molecules escape the liquid.

D The more energetic molecules remain in the liquid.

© UCLES 2020

15 A gas, in a sealed container, is compressed slowly so that its temperature does not change.

View solution

What happens to the molecules of the gas as a result of this compression?

A The average speed of the molecules increases.

B The average force in a collision between a molecule and the container increases.

C There are more frequent collisions between molecules and the container.

D The volume of each molecule decreases.

16 The diagram shows a liquid-in-glass thermometer.

View solution

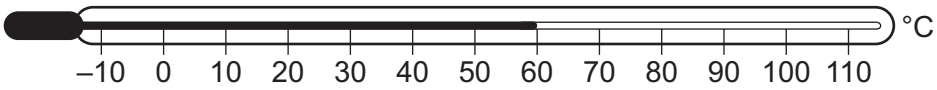

What is the temperature difference between the two fixed points on the Celsius scale?

A 10 °C **B** 100 °C **C** 110 °C **D** 120 °C

17 A metal block is left overnight in a cool, shady room. In the morning, the metal block is moved into warm surroundings.

View solution

Which statement about the metal block is correct in the morning?

A The internal energy of the metal block increases.

B The temperature of the metal block decreases.

C Convection transfers energy throughout the metal block.

D The metal contracts slightly.

18 The diagrams show four blocks of steel. The blocks are all drawn to the same scale.

View solution

The same quantity of thermal energy is given to each block.

Which block shows the greatest rise in temperature?

A **B** **C** **D**

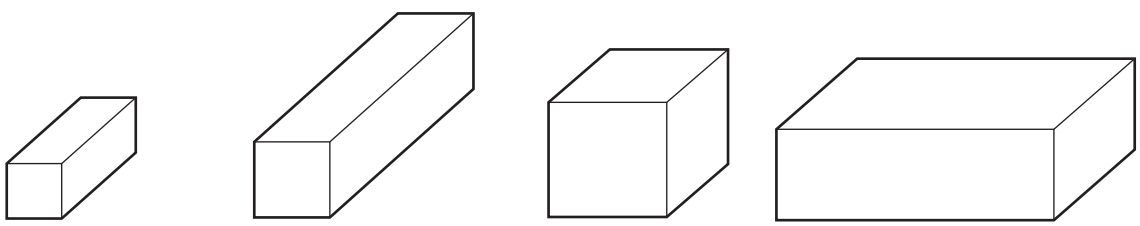

19 A room is heated by a radiator. The diagrams X and Y show two possible circulations of hot air, which heat the room.

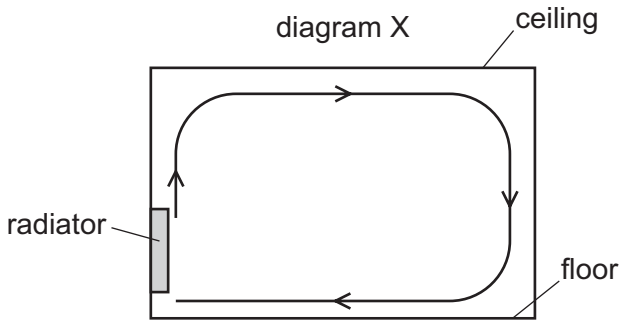

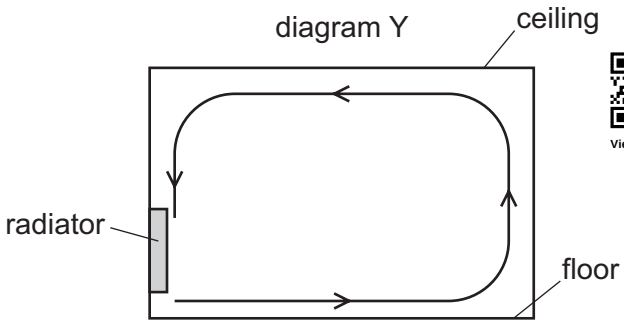

View solution

Which diagram and reason explain the heating of the room by convection?

	diagram	reason
A	X	air density decreases when air is heated
B	X	air density increases when air is heated
C	Y	air density decreases when air is heated
D	Y	air density increases when air is heated

View solution

20 Two similar liquid-in-glass thermometers P and Q are placed in direct sunlight.

The bulb of thermometer P is painted white. The bulb of thermometer Q is painted black.

How and why would the thermometer readings differ?

A P would read higher than Q because black is a good absorber of radiation.

B P would read higher than Q because black is a poor absorber of radiation.

C P would read lower than Q because black is a good absorber of radiation.

D P would read lower than Q because black is a poor absorber of radiation.

© UCLES 2020

21 The diagram shows a wave.

View solution

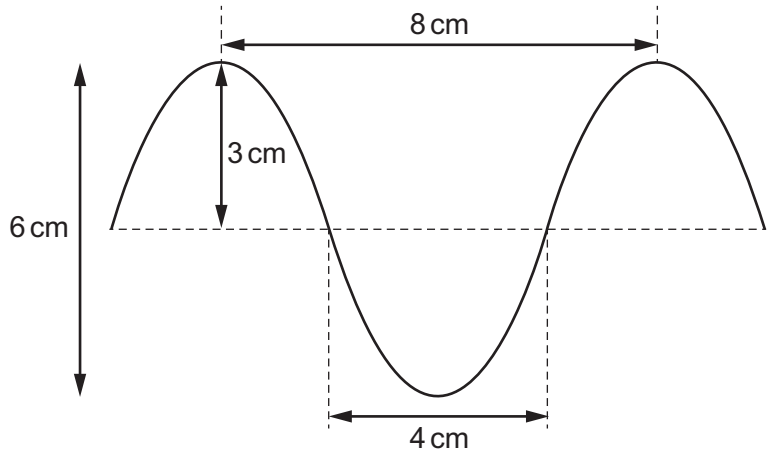

What are the amplitude and the wavelength of this wave?

	amplitude / cm	wavelength / cm
A	3	4
B	3	8
C	6	4
D	6	8

22 Waves travel more quickly on the surface of water when the water is deep.

View solution

A stone is dropped at point X into a pool of varying depth. The diagram shows the first three wavefronts on the surface of the pool.

The region between X and which labelled point is likely to be the deepest?

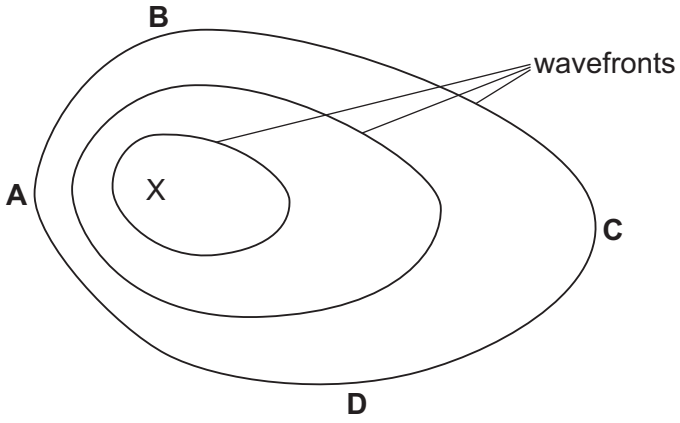

23 The diagram shows a ray of light incident on the surface of a glass block.

View solution

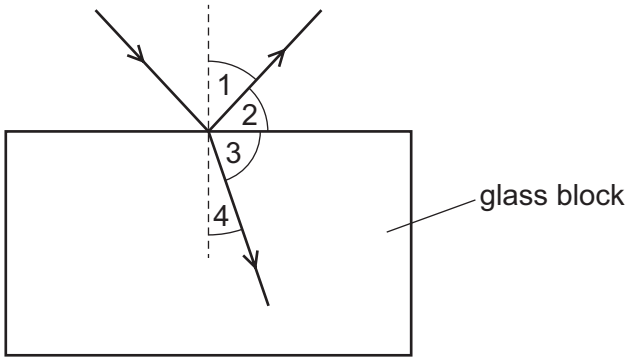

The ray of light is partially reflected back into the air and partially refracted into the glass block.

Which row correctly identifies the angle of reflection and the angle of refraction?

	angle of reflection	angle of refraction
A	1	3
B	1	4
C	2	3
D	2	4

24 A beam of light consists of yellow and blue light.

View solution

The beam of light is incident on a glass prism.

Which diagram is correct?

A

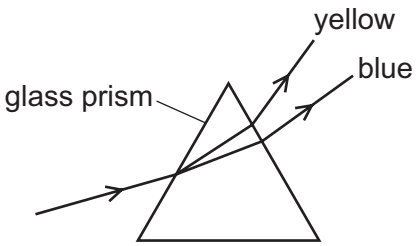

B

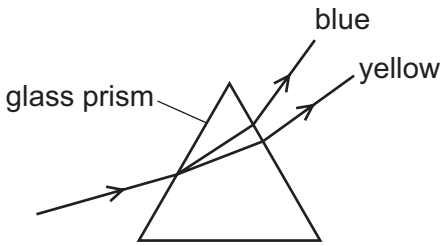

C

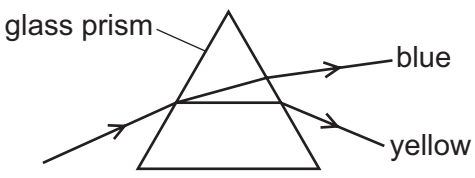

D

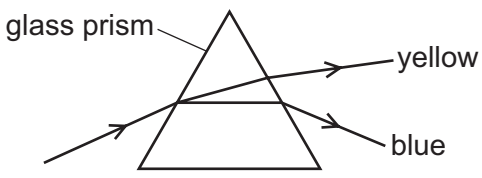

25 An intruder alarm sensor detects that a person is warmer than his surroundings.

View solution

Which type of electromagnetic wave does the sensor detect?

A infrared

B radio

C ultraviolet

D visible light

26 A dolphin sends out a sound wave. An echo returns 0.010 s later from a fish which is 7.5 m from the dolphin.

View solution

What is the speed of the sound wave in water?

A 0.075 m / s **B** 0.15 m / s **C** 750 m / s **D** 1500 m / s

27 The diagrams show two bar magnets which are attracting each other.

View solution

Which diagram shows the magnetic field pattern between the poles?

A

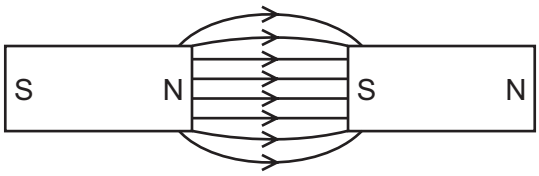

B

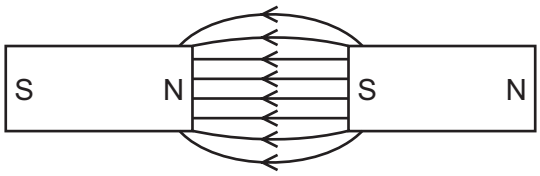

C

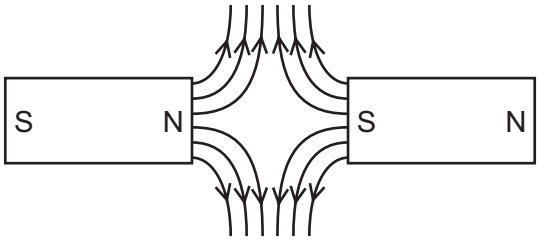

D

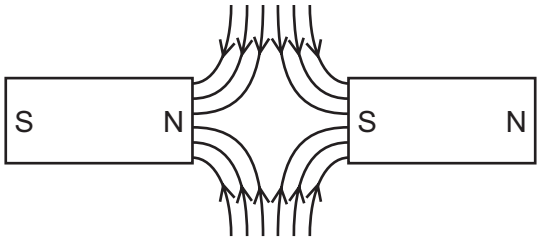

28 Four nails **A**, **B**, **C** and **D** are tested to find which makes the strongest permanent magnet.

One of the nails is placed against a bar magnet and the number of paper clips which the nail can support is recorded.

View solution

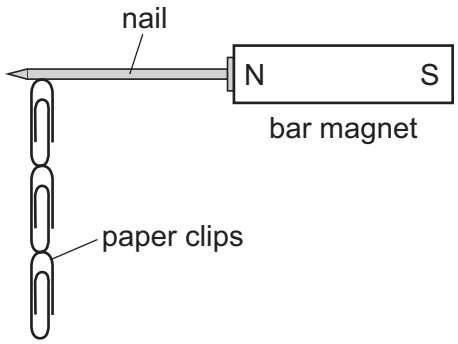

The bar magnet is then removed and the number of paper clips remaining attached to the nail is recorded. Each nail is tested individually.

Which nail becomes the strongest permanent magnet?

	number of paper clips attached to the nail	
	bar magnet present	bar magnet removed
A	2	0
B	2	1
C	4	3
D	5	2

29 A cloth is used to rub an uncharged plastic rod.

View solution

Both the rod and the cloth become charged.

Why does the plastic rod become negatively charged and the cloth become positively charged?

A The rod gains electrons and the cloth gains positive charges.

B The rod gains electrons and the cloth loses electrons.

C The rod loses electrons and the cloth gains electrons.

D The rod loses electrons and the cloth loses positive charges.

© UCLES 2020

30 The diagram shows a circuit. The wire between P and Q can be removed and replaced by a circuit component.

View solution

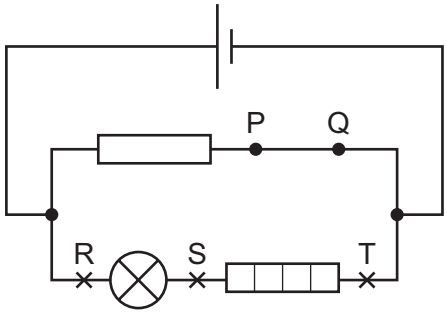

Where should a voltmeter be connected to measure the potential difference (p.d.) across the lamp?

A between P and Q in place of the wire

B in parallel with R and S

C in parallel with R and T

D in parallel with S and T

31 A student uses the circuit shown to determine the resistance of two identical resistors.

View solution

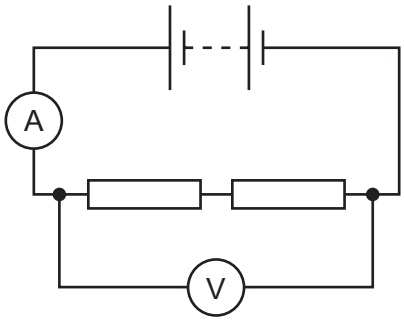

The voltmeter reading is 2.2 V and the ammeter reading is 0.25 A.

What is the resistance of each resistor?

A 0.275 Ω **B** 0.55 Ω **C** 4.4 Ω **D** 8.8 Ω

© UCLES 2020

32 The circuit shown contains five lamps J, K, L, M and N. All the lamps are glowing.

View solution

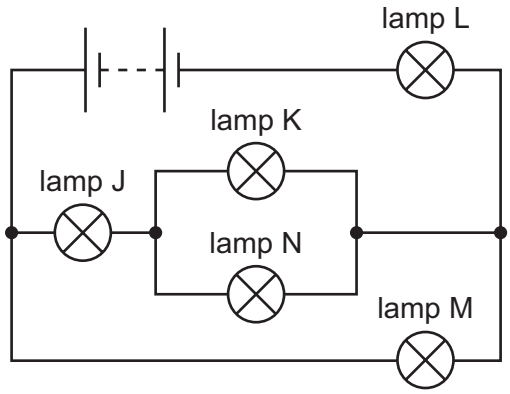

One lamp is removed and two other lamps go out.

Which lamp is removed?

A lamp J

B lamp K

C lamp L

D lamp M

33 The diagram shows a control circuit. The lamp is lit.

View solution

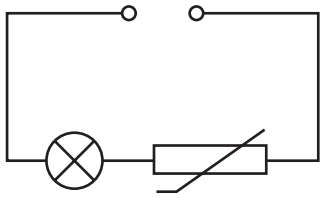

The temperature of the surroundings increases.

What will happen to the brightness of the lamp?

A It will be brighter.

B It will be less bright.

C It will not change.

D It will become brighter and then less bright.

© UCLES 2020

34 A student constructs four circuits, each containing a fuse.

The fuse blows in one circuit and both lamps in the circuit go out.

In which circuit does the fuse blow and both lamps go out?

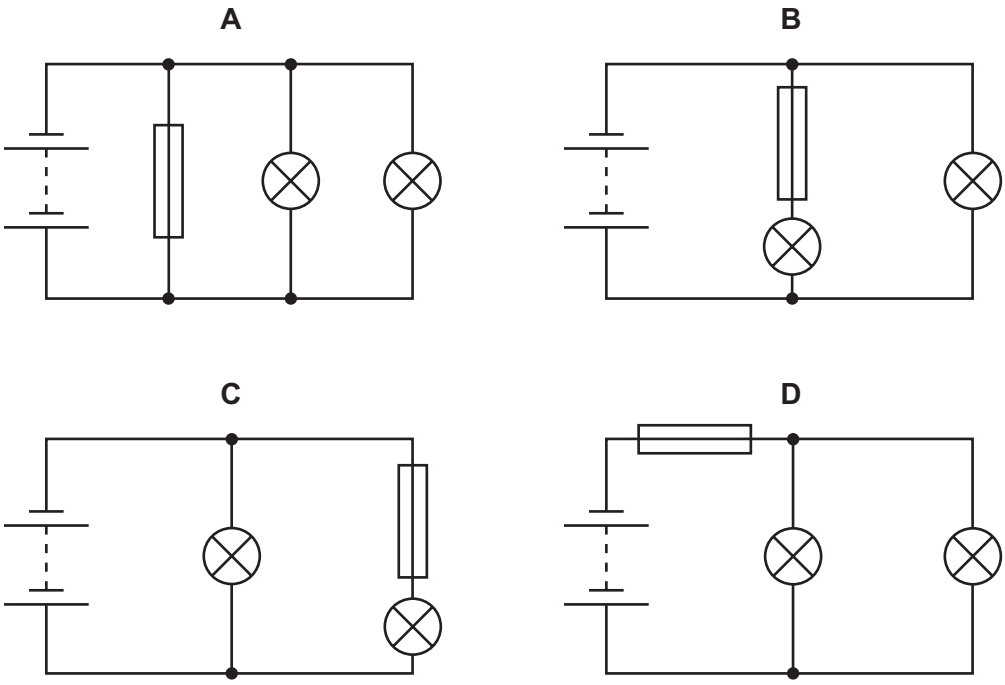

35 The diagrams P, Q and R show three voltage–time graphs.

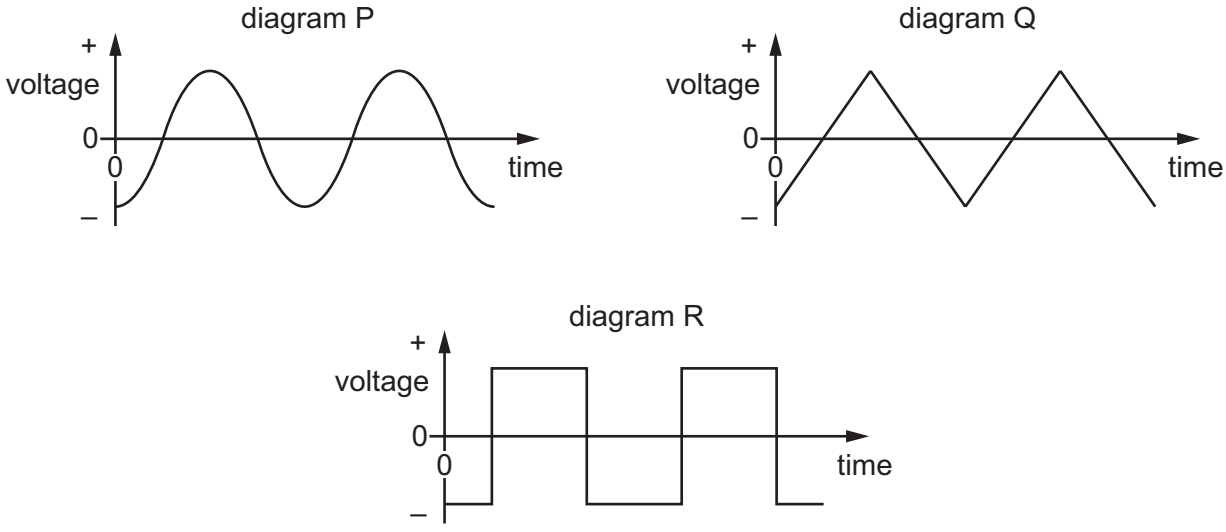

Which graphs show an alternating voltage?

A P and Q only **B** P and R only **C** Q and R only **D** P, Q and R

36 The diagram shows a transformer.

View solution

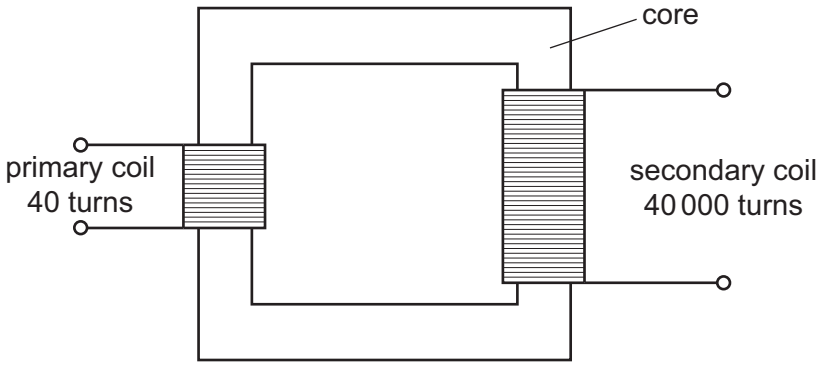

Which statement about this transformer is correct?

A It can operate from a 12 V battery.

B It has a core which is made of steel.

C It steps the input voltage up by a factor of 1000.

D It steps the input voltage down by a factor of 1000.

37 A nuclide of the element iron has the symbol shown.

View solution

$$^{56}_{26}\mathrm{Fe}$$

What does a neutral atom of this nuclide contain?

	protons	neutrons	electrons
A	26	30	26
B	26	56	30
C	30	26	56
D	56	26	30

38 Which statement about the nuclei of all atoms is correct?

View solution

A They all contain electrons.

B They are all always stable.

C They all contain protons and electrons.

D They all have a positive charge.

© UCLES 2020

39 A thin sheet of paper is placed between a radioactive source and a radiation detector. The count rate falls to a very low reading.

View solution

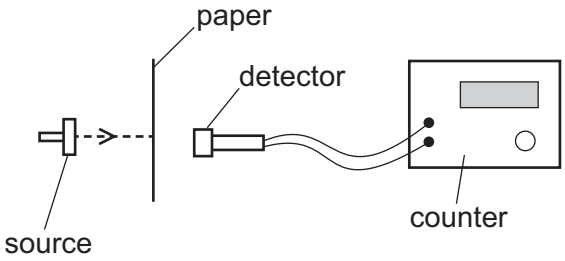

From this result, which type of radiation is the source emitting?

A α-particles

B β-particles

C γ-rays

D X-rays

40 A radioactive isotope has a half-life of 120 minutes.

View solution

It emits radiation at a rate of 100 particles per second.

How long does it take for the rate of emission to fall to 25 particles per second?

A 30 minutes **B** 45 minutes **C** 90 minutes **D** 240 minutes

© UCLES 2020

BLANK PAGE

BLANK PAGE

Permission to reproduce items where third-party owned material protected by copyright is included has been sought and cleared where possible. Every reasonable effort has been made by the publisher (UCLES) to trace copyright holders, but if any items requiring clearance have unwittingly been included, the publisher will be pleased to make amends at the earliest possible opportunity.

To avoid the issue of disclosure of answer-related information to candidates, all copyright acknowledgements are reproduced online in the Cambridge Assessment International Education Copyright Acknowledgements Booklet. This is produced for each series of examinations and is freely available to download at www.cambridgeinternational.org after the live examination series.

Cambridge Assessment International Education is part of the Cambridge Assessment Group. Cambridge Assessment is the brand name of the University of Cambridge Local Examinations Syndicate (UCLES), which itself is a department of the University of Cambridge.

© UCLES 2020