Cambridge Assessment International Education

Cambridge IGCSE™

PHYSICS **0625/21**

Paper 2 Multiple Choice (Extended) **May/June 2020**

45 minutes

You must answer on the multiple choice answer sheet.

You will need: Multiple choice answer sheet
Soft clean eraser
Soft pencil (type B or HB is recommended)

INSTRUCTIONS

- There are **forty** questions on this paper. Answer **all** questions.
- For each question there are four possible answers **A**, **B**, **C** and **D**. Choose the **one** you consider correct and record your choice in soft pencil on the multiple choice answer sheet.
- Follow the instructions on the multiple choice answer sheet.
- Write in soft pencil.
- Write your name, centre number and candidate number on the multiple choice answer sheet in the spaces provided unless this has been done for you.
- Do **not** use correction fluid.
- Do **not** write on any bar codes.
- You may use a calculator.
- Take the weight of 1.0 kg to be 10 N (acceleration of free fall = 10 m / s^2).

INFORMATION

- The total mark for this paper is 40.
- Each correct answer will score one mark. A mark will not be deducted for a wrong answer.
- Any rough working should be done on this question paper.

This document has **16** pages. Blank pages are indicated.

© UCLES 2020

1 A pendulum makes 50 complete swings in 2 min 40 s.

View solution

What is the time period for 1 complete swing?

A 1.6 s **B** 3.2 s **C** 4.8 s **D** 6.4 s

2 A student investigates the motion of a ball rolling down a slope.

View solution

The diagram shows the speed v of the ball at different times t.

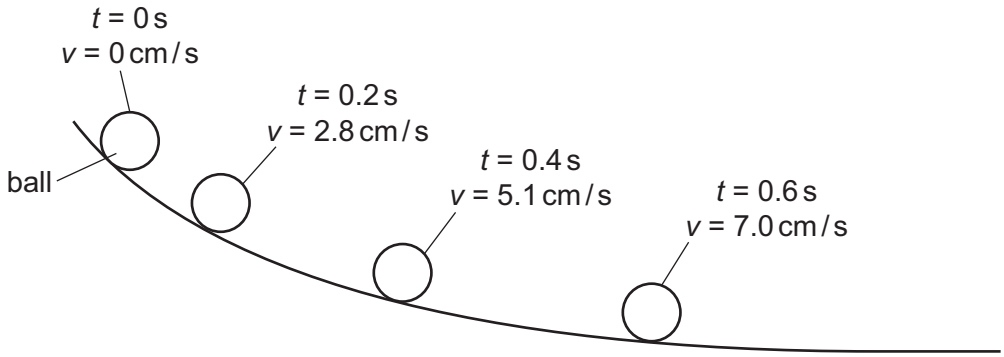

Which statement describes the motion of the ball?

A The acceleration is not constant.

B The acceleration is negative.

C The speed is decreasing.

D The velocity is constant.

3 Which statement about acceleration is correct?

View solution

A It is related to the changing speed of an object.

B It is the distance an object travels in one second.

C It is the force acting on an object divided by the distance it travels in one second.

D It is the force acting on an object when it is near to the Earth.

4 Which statement correctly describes the effects of placing a heavy load in a car?

View solution

A It is easier to accelerate the car and easier to bring the car to rest.

B It is easier to accelerate the car but more difficult to bring the car to rest.

C It is more difficult to accelerate the car and more difficult to bring the car to rest.

D It is more difficult to accelerate the car but easier to bring the car to rest.

© UCLES 2020

5 A mass of 6.0 kg rests on the surface of a planet.

View solution

On this planet, g = 20 N / kg.

What is the weight of the object?

A 0.30 N **B** 0.60 N **C** 60 N **D** 120 N

6 The mass of a measuring cylinder is 190 g.

View solution

400 cm^3 of liquid is put into the measuring cylinder.

The total mass of the measuring cylinder and the liquid is 560 g.

Four solid objects are lowered in turn into the liquid. The densities of the objects are shown.

1 0.40 g / cm^3

2 0.90 g / cm^3

3 1.2 g / cm^3

4 2.7 g / cm^3

Which objects will float in the liquid?

A 1 only **B** 1 and 2 only **C** 1, 2 and 3 **D** 3 and 4 only

7 The diagram shows a wooden beam PQ, of negligible weight, which is attached to a wall by a hinge at P and kept in a horizontal position by a vertical rope attached at Q.

View solution

The beam is 3.0 m in length.

A man of weight 800 N walks along the beam from P to Q.

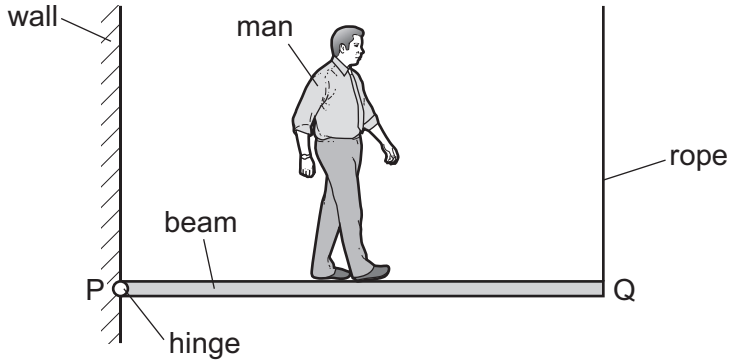

What is the distance of the man from P when the tension in the rope at Q becomes equal to 500 N?

A 0.53 m **B** 1.1 m **C** 1.9 m **D** 2.5 m

© UCLES 2020

8 Which quantity is a vector?

View solution

A acceleration

B distance

C speed

D mass

9 An object of mass 1.2 kg is moving with a velocity of 2.0 m / s when it is acted on by a force of 4.0 N. The velocity of the object increases to 5.0 m / s.

View solution

For what period of time does the force act on the object?

A 0.90 s **B** 1.1 s **C** 1.5 s **D** 3.6 s

10 The diagram shows part of a rollercoaster ride with the car at different positions.

View solution

The car runs freely down from position X to position Y and up the hill on the other side.

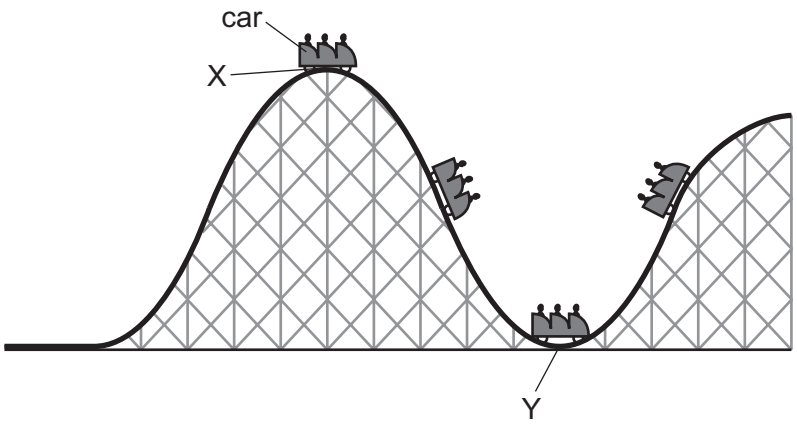

What happens to the kinetic energy and to the gravitational potential energy of the car as it moves from position X to position Y?

	kinetic energy	gravitational potential energy
A	decreases	decreases
B	decreases	increases
C	increases	decreases
D	increases	increases

© UCLES 2020

11 Which energy resource does **not** have the Sun as the original source?

View solution

A coal

B geothermal

C hydroelectric

D wind

12 The diagram shows a solid block resting on a bench. The dimensions of the block are shown.

View solution

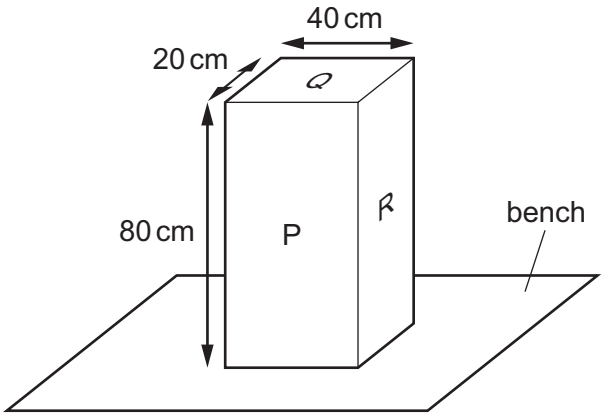

On which labelled surface should the block rest to produce the smallest pressure on the bench?

A P

B Q

C R

D P, Q and R produce the same pressure

13 The pressure due to the liquid on an object immersed in that liquid is 4500 Pa.

View solution

The density of the liquid is 900 kg / m^3.

What is the depth of the object below the surface of the liquid?

A 0.5 cm **B** 2.0 cm **C** 50 cm **D** 200 cm

14 A gas is heated in a sealed container.

View solution

The volume of the container does not change.

What happens to the molecules of the gas?

A The average distance between molecules increases.

B The average kinetic energy of the molecules increases.

C The mass of each molecule increases.

D The volume of each molecule increases.

© UCLES 2020

15 Water in a beaker evaporates when left on a bench for a period of time.

View solution

Which three factors all affect the rate of evaporation of the water?

A wind speed, surface area, temperature

B wind speed, temperature, volume

C wind speed, surface area, volume

D surface area, temperature, volume

16 A solid is heated causing it to expand.

View solution

What effect does this have on its mass and on its density?

	mass	density
A	decreases	decreases
B	decreases	stays constant
C	stays constant	decreases
D	stays constant	stays constant

17 The diagrams show four blocks of steel. The blocks are all drawn to the same scale.

View solution

The same quantity of thermal energy is given to each block.

Which block shows the greatest rise in temperature?

A **B** **C** **D**

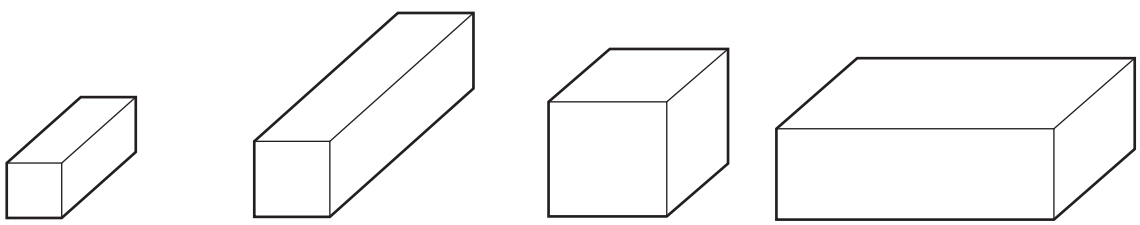

18 Why are metals better thermal conductors than other solids?

View solution

A Metals contain free electrons which help transfer the energy.

B Molecules in metals are in fixed positions.

C Molecules in metals can move freely.

D Molecules in metals vibrate faster than those in other solids.

© UCLES 2020

19 Two freezers X and Y are identical except that one has a door opening at the front and the other has a door opening at the top.

View solution

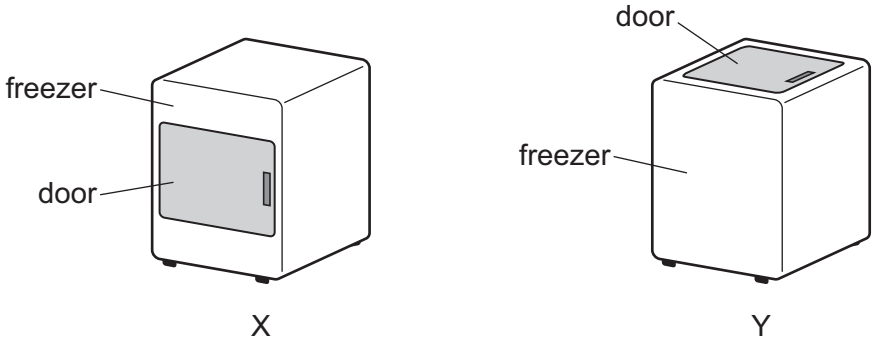

Both doors are the same size and are opened for the same amount of time.

Which freezer gains the least amount of thermal energy in this time and why?

	freezer gaining the least thermal energy	reason
A	X	cold air falls
B	X	warm air falls
C	Y	cold air falls
D	Y	warm air falls

20 A wave of frequency 6600 Hz travels 1320 m in 4.0 s.

View solution

What is the wavelength?

A 0.050 m **B** 0.80 m **C** 1.3 m **D** 20 m

© UCLES 2020

21 The diagram shows a wave.

View solution

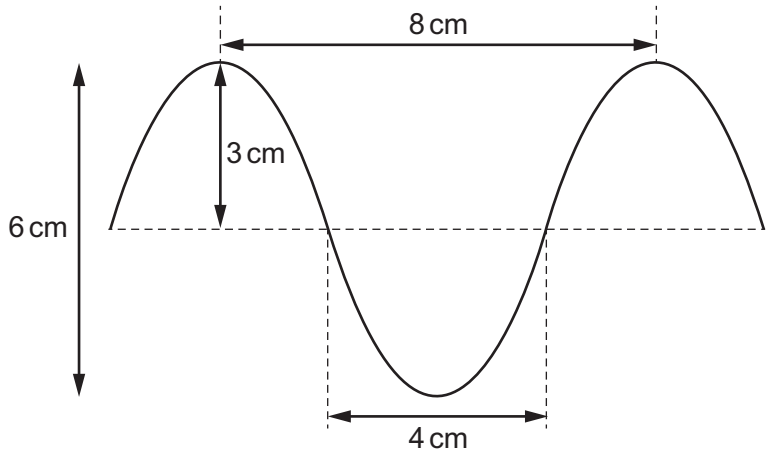

What are the amplitude and the wavelength of this wave?

	amplitude / cm	wavelength / cm
A	3	4
B	3	8
C	6	4
D	6	8

22 Which statement is correct?

A The speed of light in glass is equal to the speed of light in a vacuum multiplied by the refractive index of glass.

B The incident angle of a light ray at an air-glass surface is the angle between the ray and the glass surface.

C The sine of the critical angle at an air-glass surface is equal to $\frac{1}{\text{refractive index of glass}}$.

View solution

D The angle of refraction for light passing through an air-glass surface is proportional to the angle of incidence at that surface.

© UCLES 2020

23 A narrow beam of white light passes through a prism and is dispersed into a spectrum.

View solution

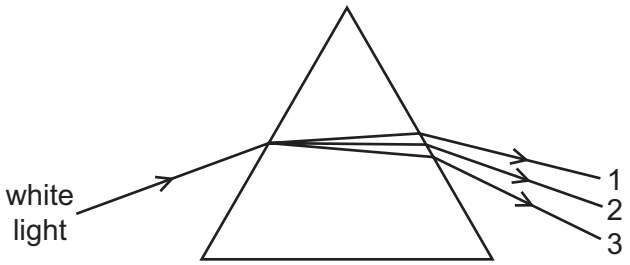

Which row is correct?

	colour 1	colour 2	colour 3
A	blue	yellow	red
B	red	blue	yellow
C	red	yellow	blue
D	yellow	blue	red

24 An intruder alarm sensor detects that a person is warmer than his surroundings.

View solution

Which type of electromagnetic wave does the sensor detect?

A infrared

B radio

C ultraviolet

D visible light

25 Sound travels through air as a series of compressions and rarefactions.

View solution

Which statement correctly compares a compression with a rarefaction?

A In a compression the wavelength is longer than in a rarefaction.

B In a compression the wavelength is shorter than in a rarefaction.

C In a compression the density of the air is greater than in a rarefaction.

D In a compression the density of the air is lower than in a rarefaction.

© UCLES 2020

26 Four nails **A**, **B**, **C** and **D** are tested to find which makes the strongest permanent magnet.

One of the nails is placed against a bar magnet and the number of paper clips which the nail can support is recorded.

View solution

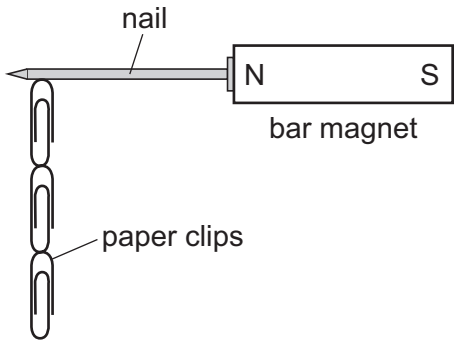

The bar magnet is then removed and the number of paper clips remaining attached to the nail is recorded. Each nail is tested individually.

Which nail becomes the strongest permanent magnet?

	number of paper clips attached to the nail	
	bar magnet present	bar magnet removed
A	2	0
B	2	1
C	4	3
D	5	2

27 The circuit shows one method of magnetising a steel bar.

View solution

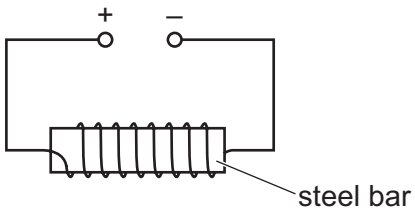

How can the circuit be altered so that it can be used to demagnetise the magnetised steel bar?

A remove the steel bar from the coil whilst the current is switched on

B replace the d.c. supply with an a.c. supply and gradually reduce the supply voltage to zero

C reverse the polarity of the d.c. supply

D reverse the polarity of the d.c. supply and gradually reduce the supply voltage to zero

28 A student uses the circuit shown to determine the resistance of two identical resistors.

View solution

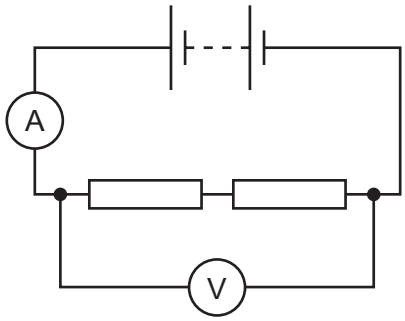

The voltmeter reading is 2.2 V and the ammeter reading is 0.25 A.

What is the resistance of each resistor?

A 0.275 Ω **B** 0.55 Ω **C** 4.4 Ω **D** 8.8 Ω

29 An electric fire is connected to a 240 V supply and transfers energy at a rate of 1.0 kW.

View solution

How much charge passes through the fire in 1.0 h?

A 42 C **B** 250 C **C** 1.5×10^4 C **D** 2.4×10^5 C

30 The diagram shows an incomplete circuit. The temperature and light levels around the circuit remain unchanged.

View solution

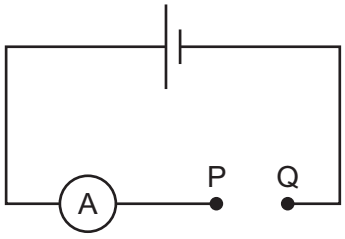

Four electrical components are connected in turn across PQ. The cell is reversed and the four electrical components are connected again in turn across PQ.

For which component is there a significant change in the magnitude of the current?

A diode

B light-dependent resistor

C resistor

D thermistor

© UCLES 2020

31 In the circuit shown, A_1 and A_2 are ammeters.

View solution

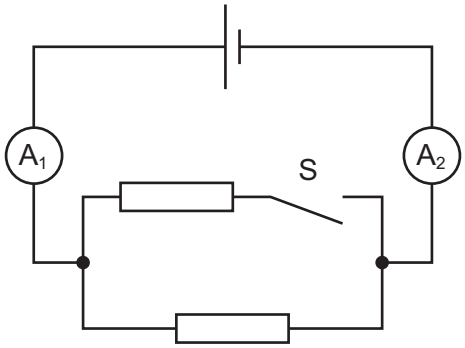

Switch S is closed.

Which row is correct?

	the resistance of the whole circuit	reading of A_1	reading of A_2
A	decreases	stays the same	increases
B	decreases	increases	increases
C	increases	stays the same	stays the same
D	increases	decreases	decreases

32 Which symbol represents an OR gate?

View solution

A



B



C

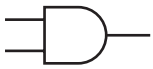

D



© UCLES 2020

33 A digital circuit consists of two logic gates.

View solution

When the input to the circuit is 1 and 1, the output is 0.

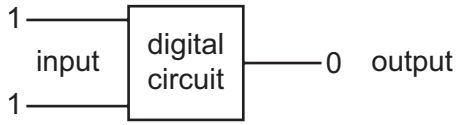

Which combination of logic gates gives this result?

A

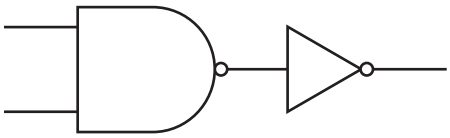

B

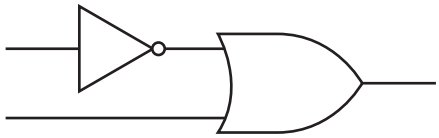

C

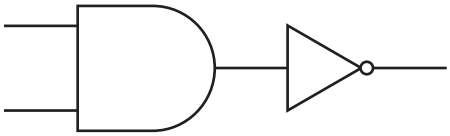

D

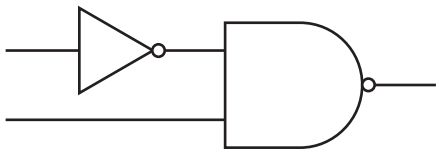

34 The diagram shows a wire between the poles of a magnet.

View solution

The wire is perpendicular to the page.

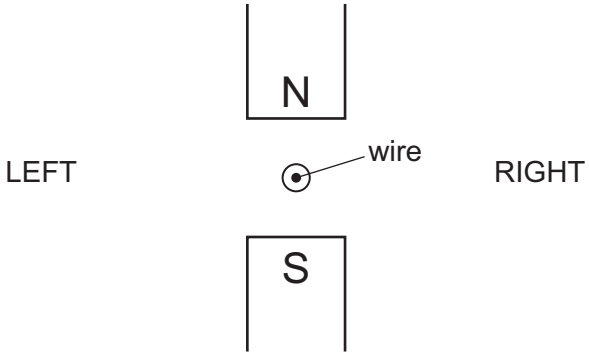

The wire is moved and a current is induced upwards, out of the paper.

In which direction is the wire moved?

A left to right

B right to left

C up the page

D down the page

35 A 100% efficient transformer converts a 240 V input voltage to a 12 V output voltage. The output power of the transformer can be a maximum of 20 W.

View solution

The output is connected to two 0.30 A bulbs in parallel. One of the bulbs fails.

How does the current in the primary coil change?

A It decreases by 0.30 A.

B It decreases by 0.015 A.

C It increases by 0.15 A.

D It remains unchanged.

36 Cables transmit electrical power from the output of the transformer at a power station to the input of the transformer at a substation.

View solution

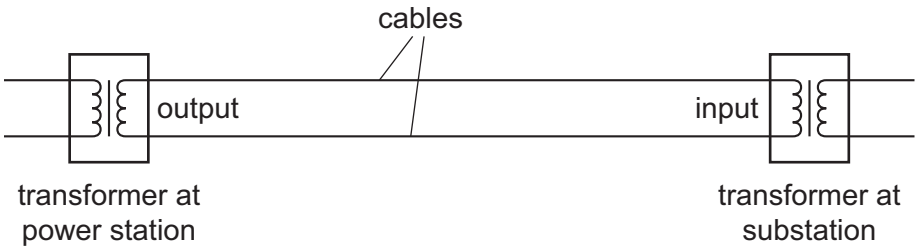

The power at the output of the transformer at the power station is 400 MW.

Which situation delivers the most power to the input of the transformer at the substation?

	potential difference at power station transformer output / kV	diameter of cables
A	200	large
B	200	small
C	400	large
D	400	small

© UCLES 2020

37 Uranium-235 is a radioactive isotope. It undergoes a chain of decays and eventually forms the stable isotope lead-207. These two isotopes are represented as shown.

View solution

$$^{235}_{92}U \qquad\qquad ^{207}_{82}Pb$$

During this chain of decay, how many protons and how many neutrons are lost from a single nucleus of uranium-235 to form a single nucleus of lead-207?

	protons	neutrons
A	10	18
B	10	28
C	18	10
D	28	10

38 A radioactive material has a half-life of 20 days.

View solution

A sample of the material contains 8.0×10^{10} atoms.

How many atomic nuclei have decayed after 60 days?

A 1.0×10^{10} **B** 4.0×10^{10} **C** 6.0×10^{10} **D** 7.0×10^{10}

39 A thin sheet of paper is placed between a radioactive source and a radiation detector. The count rate falls to a very low reading.

View solution

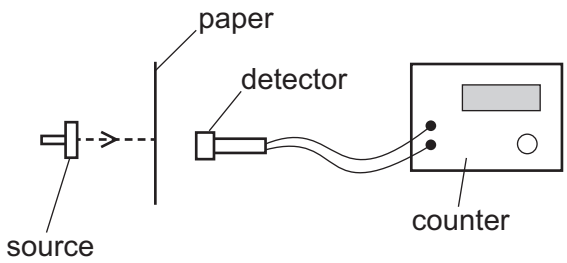

From this result, which type of radiation is the source emitting?

A α-particles

B β-particles

C γ-rays

D X-rays

© UCLES 2020

40 α-particles, β-particles and γ-rays are emitted by radioactive nuclei when they decay.

View solution

Which emissions can be deflected by an electric field?

A α-particles and β-particles only

B β-particles and γ-rays only

C γ-rays and α-particles only

D α-particles, β-particles and γ-rays

Permission to reproduce items where third-party owned material protected by copyright is included has been sought and cleared where possible. Every reasonable effort has been made by the publisher (UCLES) to trace copyright holders, but if any items requiring clearance have unwittingly been included, the publisher will be pleased to make amends at the earliest possible opportunity.

To avoid the issue of disclosure of answer-related information to candidates, all copyright acknowledgements are reproduced online in the Cambridge Assessment International Education Copyright Acknowledgements Booklet. This is produced for each series of examinations and is freely available to download at www.cambridgeinternational.org after the live examination series.

Cambridge Assessment International Education is part of the Cambridge Assessment Group. Cambridge Assessment is the brand name of the University of Cambridge Local Examinations Syndicate (UCLES), which itself is a department of the University of Cambridge.

© UCLES 2020