Cambridge Assessment International Education

Cambridge IGCSE™

PHYSICS **0625/23**

Paper 2 Multiple Choice (Extended) **May/June 2020**

45 minutes

You must answer on the multiple choice answer sheet.

You will need: Multiple choice answer sheet
Soft clean eraser
Soft pencil (type B or HB is recommended)

INSTRUCTIONS

- There are **forty** questions on this paper. Answer **all** questions.
- For each question there are four possible answers **A**, **B**, **C** and **D**. Choose the **one** you consider correct and record your choice in soft pencil on the multiple choice answer sheet.
- Follow the instructions on the multiple choice answer sheet.
- Write in soft pencil.
- Write your name, centre number and candidate number on the multiple choice answer sheet in the spaces provided unless this has been done for you.
- Do **not** use correction fluid.
- Do **not** write on any bar codes.
- You may use a calculator.
- Take the weight of 1.0 kg to be 10 N (acceleration of free fall = 10 m / s^2).

INFORMATION

- The total mark for this paper is 40.
- Each correct answer will score one mark. A mark will not be deducted for a wrong answer.
- Any rough working should be done on this question paper.

This document has **20** pages. Blank pages are indicated.

© UCLES 2020

1 Diagram 1 shows a solid, rectangular-sided block.

View solution

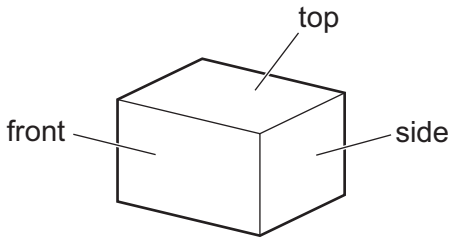

diagram 1

Diagram 2 shows the same block from the front and from the side.

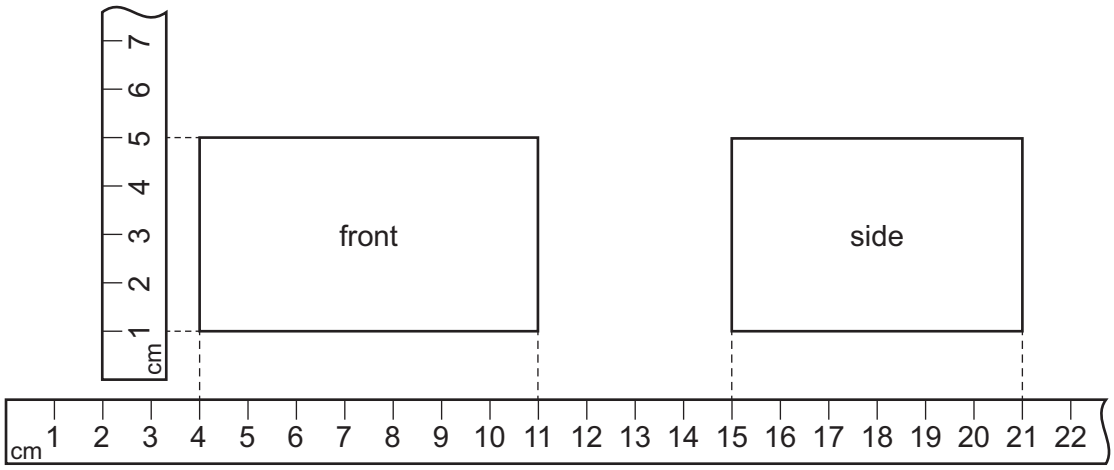

diagram 2

Metre rules have been shown close to the edges of the block.

What is the volume of the block?

A 120 cm^3 **B** 168 cm^3 **C** 264 cm^3 **D** 1155 cm^3

© UCLES 2020

2 A student investigates the motion of a ball rolling down a slope.

View solution

The diagram shows the speed v of the ball at different times t.

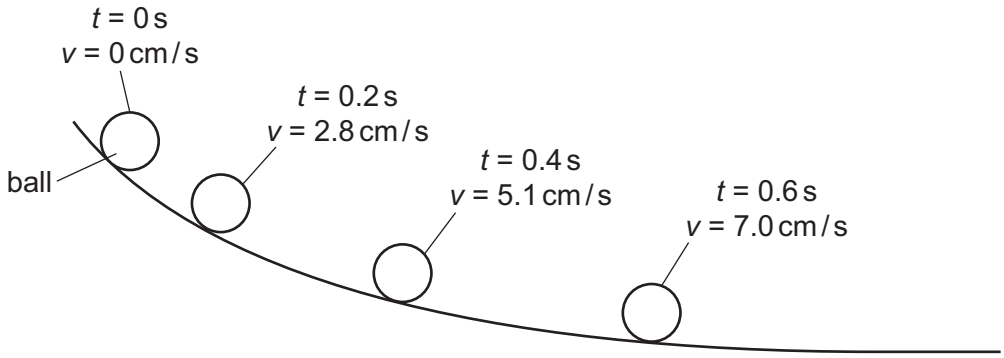

Which statement describes the motion of the ball?

A The acceleration is not constant.

B The acceleration is negative.

C The speed is decreasing.

D The velocity is constant.

3 Which statement about acceleration is correct?

View solution

A It is related to the changing speed of an object.

B It is the distance an object travels in one second.

C It is the force acting on an object divided by the distance it travels in one second.

D It is the force acting on an object when it is near to the Earth.

4 Which statement correctly describes the effects of placing a heavy load in a car?

View solution

A It is easier to accelerate the car and easier to bring the car to rest.

B It is easier to accelerate the car but more difficult to bring the car to rest.

C It is more difficult to accelerate the car and more difficult to bring the car to rest.

D It is more difficult to accelerate the car but easier to bring the car to rest.

© UCLES 2020

5 Which row gives the correct weight for the mass shown?

View solution

The value of g is 10 N / kg.

	mass / kg	weight / N
A	2	20
B	10	1
C	10	10
D	20	2

6 A rectangular gymnasium is 50 m long, 25 m wide and 8.0 m high.

View solution

The density of air is 1.2 kg / m^3.

What is the best estimate of the mass of air in the gymnasium?

A 0.00012 kg **B** 100 kg **C** 8300 kg **D** 12 000 kg

7 Which moving object has a resultant force acting on it?

View solution

A a diver rising vertically through water at constant speed

B an aircraft circling an airport at constant speed

C a parachutist descending vertically at terminal velocity

D a train going up a straight slope at constant speed

8 Which quantity is **not** a vector?

View solution

A acceleration

B temperature

C velocity

D weight

© UCLES 2020

9 A ball falls vertically to the floor and rebounds vertically upwards.

View solution

Just before it hits the floor, its speed is 4.0 m / s.

As it rebounds, its speed is 3.0 m / s.

The mass of the ball is 0.50 kg.

What is the change in momentum of the ball?

A 0.50 kg m / s downwards

B 0.50 kg m / s upwards

C 3.5 kg m / s downwards

D 3.5 kg m / s upwards

10 A mass bounces up and down on a steel spring. The diagram shows the mass and the spring at different points during the motion.

View solution

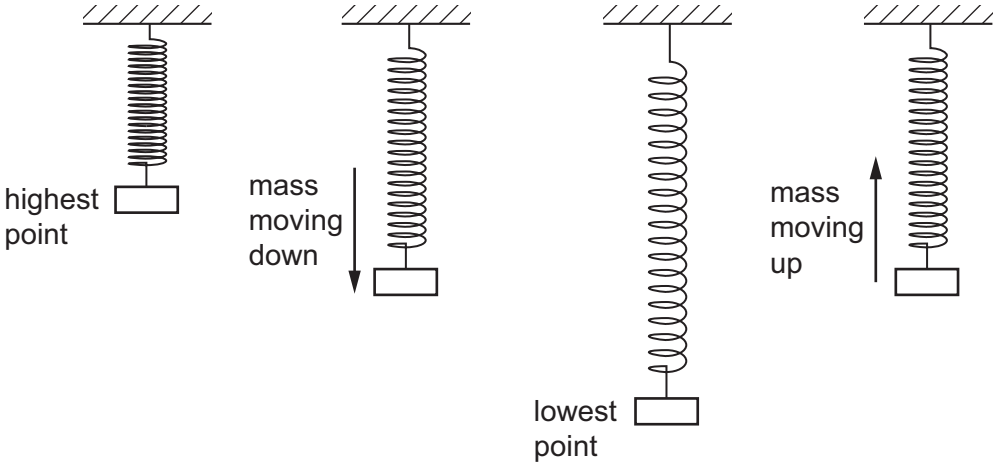

At which point does the mass have the least gravitational potential energy and at which point is the most elastic energy stored in the spring?

	least amount of gravitational potential energy	most elastic energy stored in spring
A	mass moving down	mass moving up
B	mass moving down	lowest point
C	lowest point	mass moving up
D	lowest point	lowest point

© UCLES 2020

11 The velocity v of an object increases as it falls towards the ground.

View solution

Which quantity is directly proportional to v^2?

A the speed of the object

B the gravitational potential energy of the object

C the kinetic energy of the object

D the momentum of the object

12 The diagram shows a solid block resting on a bench. The dimensions of the block are shown.

View solution

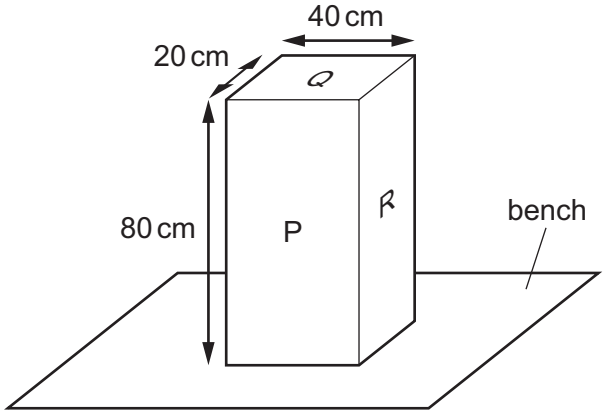

On which labelled surface should the block rest to produce the smallest pressure on the bench?

A P

B Q

C R

D P, Q and R produce the same pressure

13 A pipe full of water connects a water supply on a hill to a tap lower down the hill.

View solution

The length of the pipe is 500 m. The height of the supply above the tap is 100 m.

The density of the water is 1000 kg / m^3. The effect of atmospheric pressure is negligible.

What is the water pressure at the tap?

A 100 000 Pa

B 500 000 Pa

C 1 000 000 Pa

D 5 000 000 Pa

© UCLES 2020

14 When a molecule rebounds from a wall, a force is exerted on the wall.

View solution

What causes this force?

A the kinetic energy gained by the molecule

B the kinetic energy lost by the molecule

C the change of momentum of the molecule

D the change of speed of the molecule

15 The relationship between pressure p and volume V of a gas is given as pV = constant.

View solution

Under which conditions for the mass of a gas and for its temperature does the equation hold?

	mass	temperature
A	changing	changing
B	changing	constant
C	constant	changing
D	constant	constant

16 The diagram shows a liquid-in-glass thermometer.

View solution



Which row gives the correct labels for the thermometer?

	X	Y
A	water	narrow tube of uniform diameter
B	alcohol	narrow tube of uniform diameter
C	water	this end immersed in substance to be measured
D	alcohol	this end immersed in substance to be measured

© UCLES 2020

17 The diagrams show four blocks of steel. The blocks are all drawn to the same scale.

The same quantity of thermal energy is given to each block.

Which block shows the greatest rise in temperature?

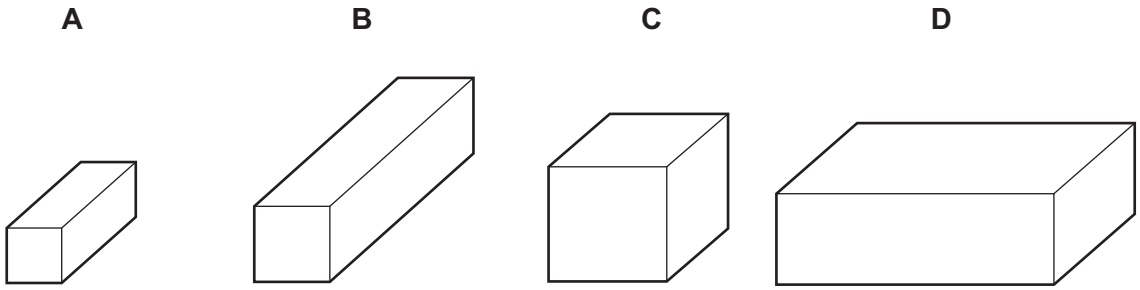

18 Why are metals better conductors of thermal energy than non-metals?

A They contain free electrons.

B Their molecules are further apart.

C Their molecules vibrate at a higher frequency.

D They have smoother surfaces.

19 The diagram shows a vacuum flask used to keep a liquid warm.

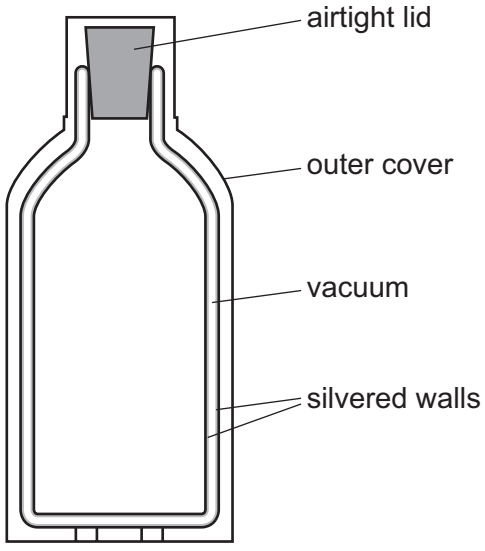

Which methods of heat loss are reduced by the **vacuum** between the silvered walls?

A conduction only

B conduction and convection only

C convection and radiation only

D conduction, convection and radiation

© UCLES 2020

20 An earthquake-monitoring station records the arrival of 16 complete waves of an earthquake wave in 20 s.

View solution

The speed of the earthquake wave is 6.0 km / s.

What is the wavelength of the earthquake wave?

A 1.3×10^{-4} m

B 2.1×10^{-4} m

C 4.8×10^{3} m

D 7.5×10^{3} m

21 The diagram shows a wave.

View solution

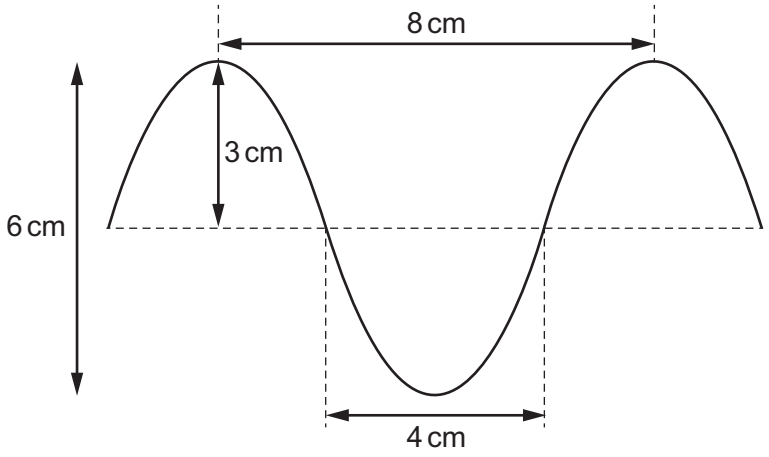

What are the amplitude and the wavelength of this wave?

	amplitude / cm	wavelength / cm
A	3	4
B	3	8
C	6	4
D	6	8

22 Which statement is correct?

A The speed of light in glass is equal to the speed of light in a vacuum multiplied by the refractive index of glass.

B The incident angle of a light ray at an air-glass surface is the angle between the ray and the glass surface.

View solution

C The sine of the critical angle at an air-glass surface is equal to $\frac{1}{\text{refractive index of glass}}$.

D The angle of refraction for light passing through an air-glass surface is proportional to the angle of incidence at that surface.

© UCLES 2020

23 Which statement about converging lenses is correct?

View solution

A A real image of an object projected onto a screen by a converging lens is always inverted.

B The image formed by a converging lens is always upright.

C The image formed by a converging lens when used as a magnifying glass is a real image.

D Parallel rays entering a converging lens are focused at a distance greater than the focal length from the lens.

24 An intruder alarm sensor detects that a person is warmer than his surroundings.

View solution

Which type of electromagnetic wave does the sensor detect?

A infrared

B radio

C ultraviolet

D visible light

25 Two people are standing outdoors on either side of a high wall.

View solution

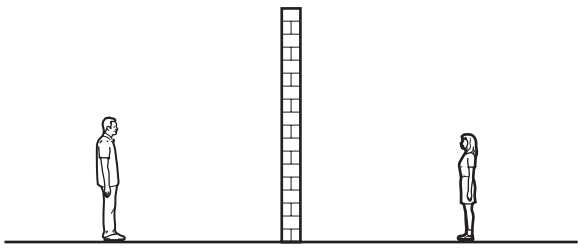

Person 1 can hear person 2 talking although he cannot see her.

Which statement explains this?

A The sound waves have diffracted around the wall.

B The sound waves have passed unaffected through the wall.

C The sound waves have reflected around the wall.

D The sound waves have refracted around the wall.

© UCLES 2020

26 Four nails **A**, **B**, **C** and **D** are tested to find which makes the strongest permanent magnet.

One of the nails is placed against a bar magnet and the number of paper clips which the nail can support is recorded.

View solution

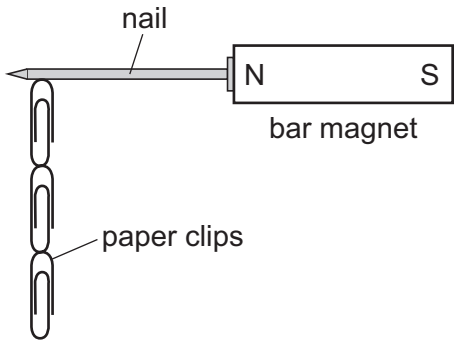

The bar magnet is then removed and the number of paper clips remaining attached to the nail is recorded. Each nail is tested individually.

Which nail becomes the strongest permanent magnet?

	number of paper clips attached to the nail	
	bar magnet present	bar magnet removed
A	2	0
B	2	1
C	4	3
D	5	2

© UCLES 2020

27 The diagrams show a magnetised steel rod inside a solenoid connected to a potentiometer.

View solution

In diagram 1, the potentiometer is connected to a d.c. power supply.

In diagram 2, the potentiometer is connected to an a.c. power supply.

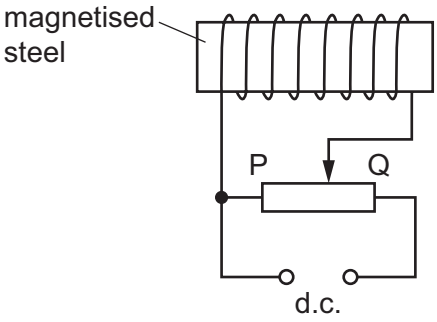

diagram 1

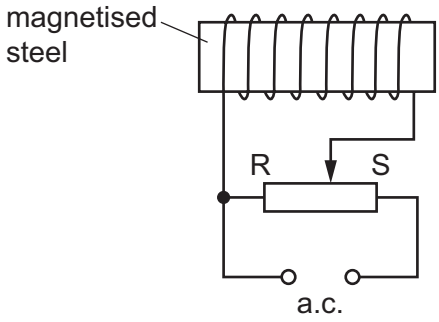

diagram 2

Which action would demagnetise the piece of steel?

A In diagram 1, move the potentiometer slide from P to Q.

B In diagram 1, move the potentiometer slide from Q to P.

C In diagram 2, move the potentiometer slide from R to S.

D In diagram 2, move the potentiometer slide from S to R.

28 The diagram shows a positively charged conducting sphere and a wire connected to earth.

View solution

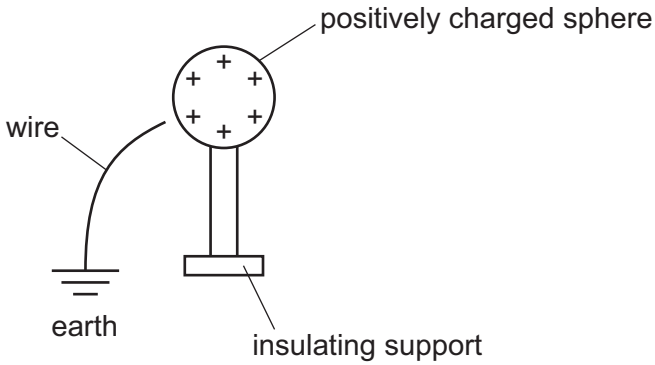

What happens when the wire is touched onto the sphere?

A Electrons flow from earth to the sphere.

B Electrons flow from the sphere to earth.

C Positive charges flow from earth to the sphere.

D Positive charges flow from the sphere to earth.

© UCLES 2020

29 A student uses the circuit shown to determine the resistance of two identical resistors.

View solution

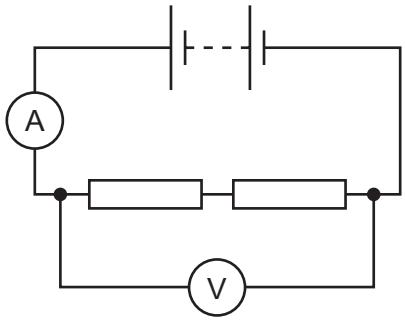

The voltmeter reading is 2.2 V and the ammeter reading is 0.25 A.

What is the resistance of each resistor?

A 0.275 Ω **B** 0.55 Ω **C** 4.4 Ω **D** 8.8 Ω

View solution

30 There is a current of 2.0 A in a resistor of resistance 8.0 Ω.

How much power is dissipated in the resistor?

A 0.25 W **B** 4.0 W **C** 16 W **D** 32 W

View solution

31 The lamps, the diodes and the batteries in the circuits are identical.

In which circuit does the ammeter give the greatest reading?

A

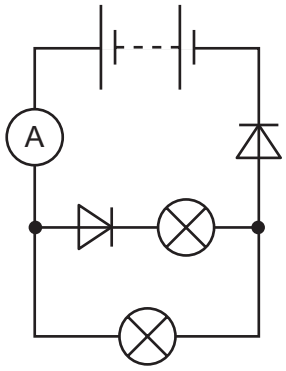

B

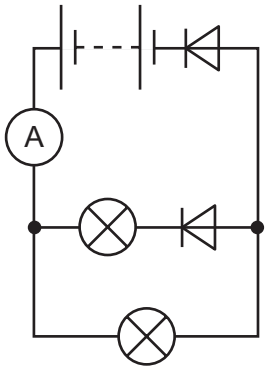

C

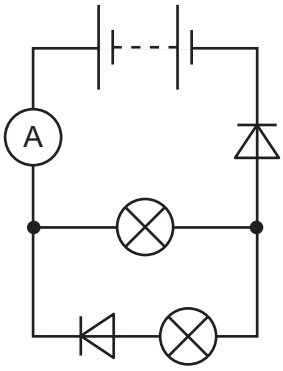

D

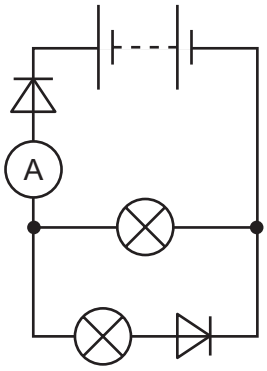

View solution

32 Two resistors are connected in series with a power supply.

Which statement about the circuit is correct?

A The current from the supply is greater than the current in each resistor.

B The current from the supply is equal to the current in each resistor.

C The current from the supply is less than the current in each resistor.

D The current from the supply is the sum of the currents in each resistor.

33 Which two logic gates each have a high output when both of their inputs are high?

View solution

A AND and OR

B AND and NOR

C NAND and NOR

D NAND and OR

34 The diagram shows a series of logic gates and part of its corresponding truth table.

View solution

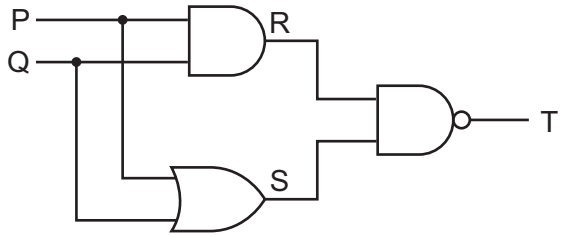

P	Q	R	S	T
0	0	0	0	1
0	1			
1	0	0	1	1
1	1	1	1	0

What are the missing values in row 2 of the truth table?

A 0 1 0 **B** 0 1 1 **C** 1 0 0 **D** 1 1 1

35 The graphs show how the currents in three circuits vary with time.

View solution

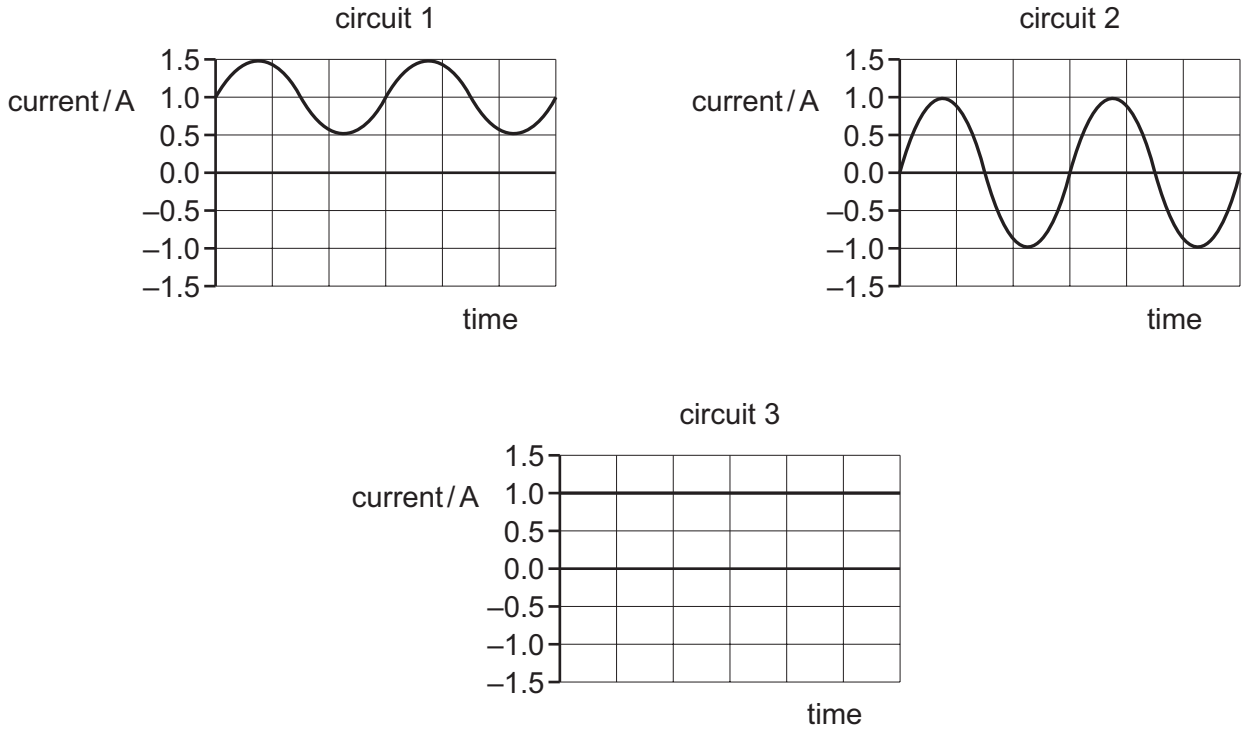

In which circuits is there a direct current?

A 1 and 2 **B** 1 and 3 **C** 2 only **D** 3 only

36 The coil of a simple a.c. generator rotates steadily in a uniform magnetic field.

View solution

The diagram shows the position of the coil at time $t = 0$.

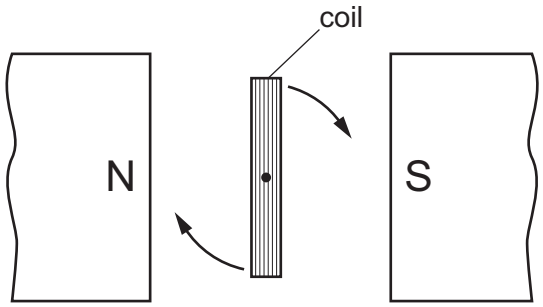

Which graph shows the output voltage for one revolution of the coil?

A

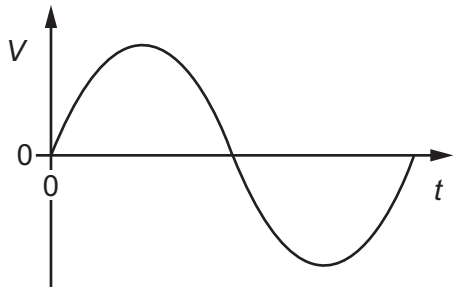

B

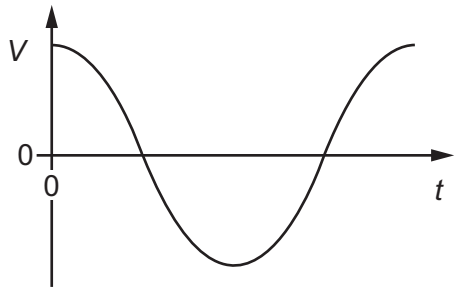

C

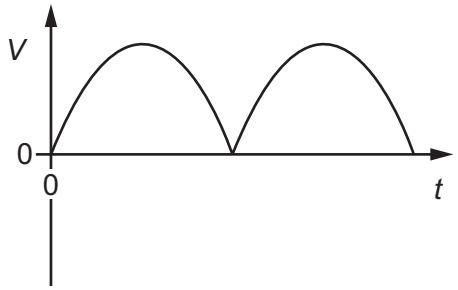

D

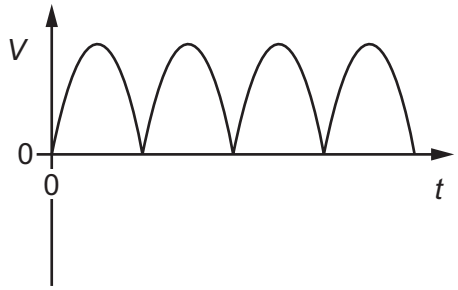

37 What occurs during nuclear fusion?

View solution

A Two light atomic nuclei join together and emit energy.

B Two light atomic nuclei join together and absorb energy.

C A heavy atomic nucleus splits and emits energy.

D A heavy atomic nucleus splits and absorbs energy.

© UCLES 2020

38 A radioactive material has a half-life of 20 days.

View solution

A sample of the material contains 8.0×10^{10} atoms.

How many atomic nuclei have decayed after 60 days?

A 1.0×10^{10} **B** 4.0×10^{10} **C** 6.0×10^{10} **D** 7.0×10^{10}

39 A thin sheet of paper is placed between a radioactive source and a radiation detector. The count rate falls to a very low reading.

View solution

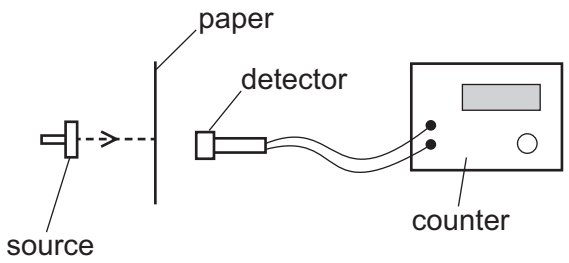

From this result, which type of radiation is the source emitting?

A α-particles

B β-particles

C γ-rays

D X-rays

40 α-particles, β-particles and γ-rays are emitted by radioactive nuclei when they decay.

View solution

Which emissions can be deflected by an electric field?

A α-particles and β-particles only

B β-particles and γ-rays only

C γ-rays and α-particles only

D α-particles, β-particles and γ-rays

© UCLES 2020

BLANK PAGE

BLANK PAGE

BLANK PAGE

Permission to reproduce items where third-party owned material protected by copyright is included has been sought and cleared where possible. Every reasonable effort has been made by the publisher (UCLES) to trace copyright holders, but if any items requiring clearance have unwittingly been included, the publisher will be pleased to make amends at the earliest possible opportunity.

To avoid the issue of disclosure of answer-related information to candidates, all copyright acknowledgements are reproduced online in the Cambridge Assessment International Education Copyright Acknowledgements Booklet. This is produced for each series of examinations and is freely available to download at www.cambridgeinternational.org after the live examination series.

Cambridge Assessment International Education is part of the Cambridge Assessment Group. Cambridge Assessment is the brand name of the University of Cambridge Local Examinations Syndicate (UCLES), which itself is a department of the University of Cambridge.

© UCLES 2020