Cambridge Assessment International Education

Cambridge IGCSE™

CANDIDATE NAME									
CENTRE NUMBER						CANDIDATE NUMBER			

PHYSICS **0625/61**

Paper 6 Alternative to Practical **May/June 2020**

1 hour

You must answer on the question paper.

No additional materials are needed.

INSTRUCTIONS

- Answer **all** questions.
- Use a black or dark blue pen. You may use an HB pencil for any diagrams or graphs.
- Write your name, centre number and candidate number in the boxes at the top of the page.
- Write your answer to each question in the space provided.
- Do **not** use an erasable pen or correction fluid.
- Do **not** write on any bar codes.
- You may use a calculator.
- You should show all your working and use appropriate units.

INFORMATION

- The total mark for this paper is 40.
- The number of marks for each question or part question is shown in brackets [ ].

This document has **12** pages. Blank pages are indicated.

© UCLES 2020

1 A student investigates the balancing of a metre rule.

Fig. 1.1 shows the arrangement.

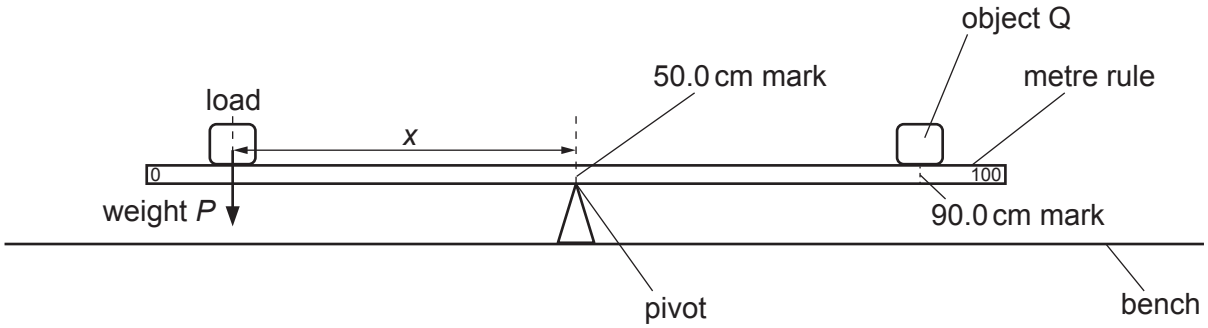

Fig. 1.1

(a) The student places the metre rule on the pivot at the 50.0 cm mark. He places an object Q on the metre rule with its centre at the 90.0 cm mark. He places a load of weight P = 2.0 N on the metre rule and adjusts the position of the load so that the metre rule is as near as possible to being balanced.

View solution

He measures the distance x from the centre of the load to the pivot.

He repeats the procedure using loads of weight P = 3.0 N, 4.0 N, 5.0 N and 6.0 N. All the values of P and x are recorded in Table 1.1.

Table 1.1

P/N	x/cm	$\frac{1}{x} \Big/ \frac{1}{\text{cm}}$
2.0	40.0	
3.0	27.0	
4.0	20.0	
5.0	15.9	
6.0	13.3	

Calculate, and record in Table 1.1, the values of $\frac{1}{x}$. [2]

(b) Plot a graph of P/N (y-axis) against $\frac{1}{x} \Big/ \frac{1}{\text{cm}}$ (x-axis). Start both axes at the origin (0,0).

View solution

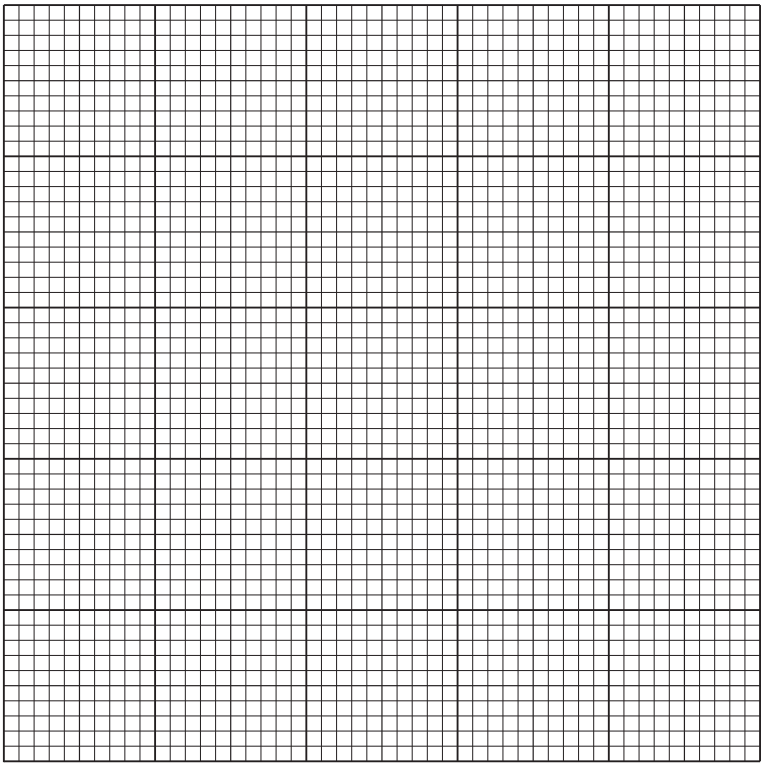

[4]

(c) In this experiment, x_{max}, the maximum possible value for x is 50.0 cm. Calculate $\frac{1}{x_{max}}$.

View solution

$$\frac{1}{x_{max}} = \text{.....} \frac{1}{\text{cm}}$$

Use the graph to determine the minimum value of P required to balance the metre rule in this experiment. Show clearly on the graph how you determined this value.

minimum value of P = ... [2]

© UCLES 2020

(d) In this experiment, the width of object Q is slightly greater than the width of the metre rule. Explain briefly how you would place the object Q as accurately as possible on the 90.0 cm mark of the metre rule. You may draw a diagram.

View solution

.....

.....

.....

..... [1]

(e) In this experiment, it is difficult to determine the exact position of the load that will make the metre rule balance.

View solution

(i) Explain briefly why this is difficult.

.....

.....

..... [1]

(ii) Explain briefly how you would find the best position of the load that will make the metre rule balance.

.....

.....

..... [1]

[Total: 11]

View solution

2 A student determines the resistances of some filament lamps.

Fig. 2.1 shows the first circuit she uses.

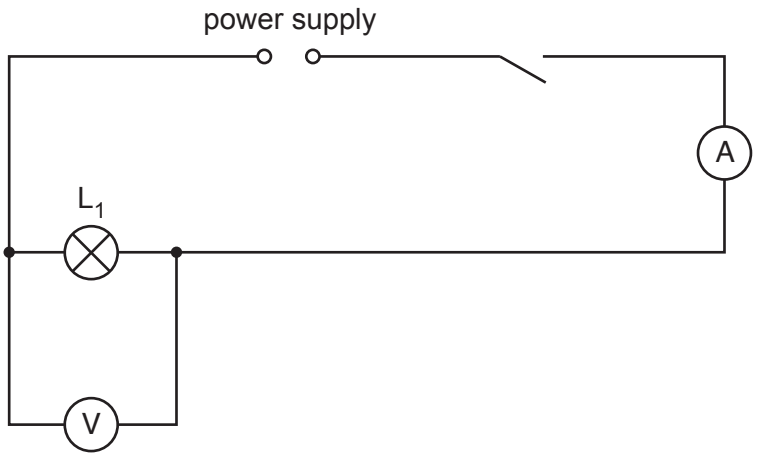

Fig. 2.1

(a) (i) Record the potential difference V_1 across the lamp L_1, as shown on the voltmeter in Fig. 2.2.

View solution

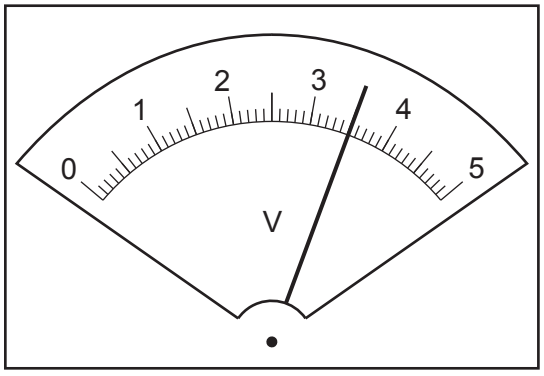

Fig. 2.2

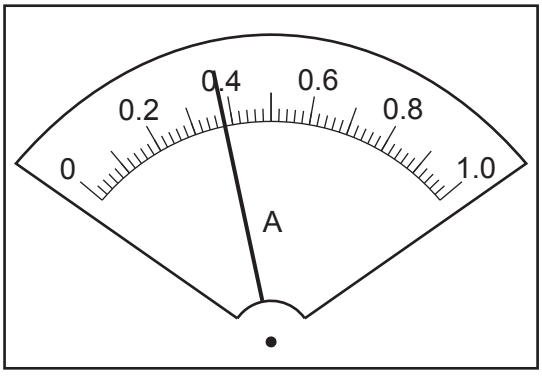

Fig. 2.3

V_1 = ... V [1]

(ii) Record the current I_1 in the circuit, as shown in Fig. 2.3.

View solution

I_1 = ... A [1]

(iii) Calculate the resistance R_1 of the filament of lamp L_1. Use the equation $R_1 = \frac{V_1}{I_1}$. Include the unit.

View solution

R_1 = ... [2]

(b) The student disconnects the voltmeter. She connects lamp L_2 in series with lamp L_1. She connects the voltmeter across lamp L_2.

She measures the current I_2 in the circuit and the potential difference V_2 across lamp L_2.

I_2 = 0.30 A

V_2 = 1.7 V

Calculate the resistance R_2 of the filament of lamp L_2. Use the equation $R_2 = \frac{V_2}{I_2}$.

R_2 = ...

The student disconnects the voltmeter. She connects lamp L_3 in series with lamps L_1 and L_2. She connects the voltmeter across lamp L_3.

She measures the current I_3 in the circuit and the potential difference V_3 across lamp L_3.

I_3 = 0.26 A

V_3 = 1.2 V

Calculate the resistance R_3 of the filament of lamp L_3. Use the equation $R_3 = \frac{V_3}{I_3}$.

R_3 = ...

[1]

(c) Calculate $R_1 + R_2 + R_3$. Give your answer to a suitable number of significant figures for this experiment.

$R_1 + R_2 + R_3$ = ... [1]

(d) Some students make suggestions about the results of the experiment.

Suggestion **A**: $R_1 + R_2 + R_3$ should be equal to $3 \times R_1$.

Suggestion **B**: $R_1 + R_2 + R_3$ should be less than $3 \times R_1$.

Suggestion **C**: $R_1 + R_2 + R_3$ should be greater than $3 \times R_1$.

State which suggestion **A**, **B** or **C** agrees with your results. Justify your answer by reference to your results.

statement .....

justification .....

.....

[2]

(e) Draw a circuit diagram to show the circuit used in part **(b)** with all three lamps connected in series.

View solution

[3]

[Total: 11]

3 A student investigates the position of the image in a plane mirror.

Fig. 3.1 shows the ray-trace sheet he uses.

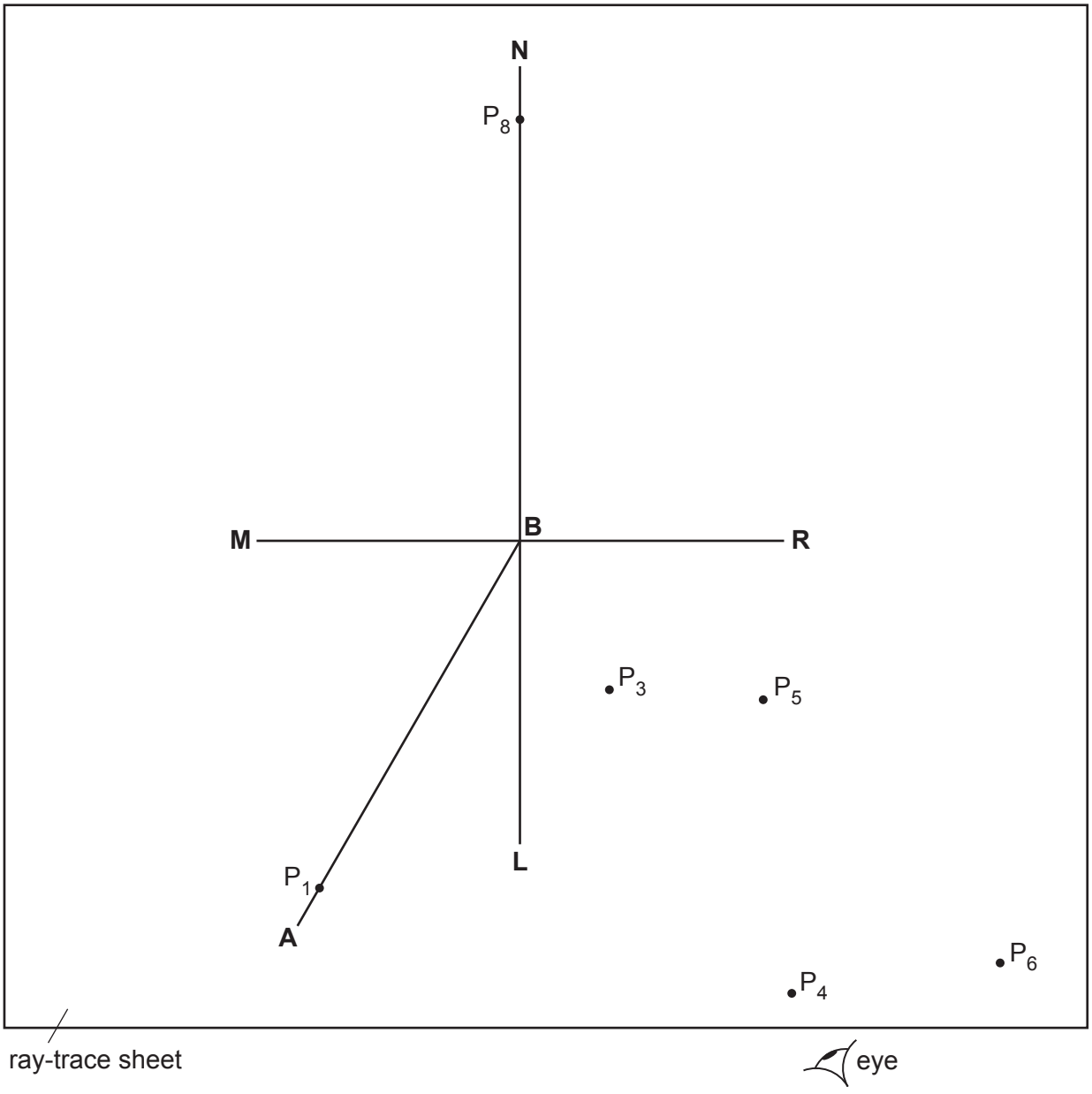

Fig. 3.1

(a)

View solution

- The student draws the line **MR**.
- He draws a normal **NL** to this line that passes through the centre of **MR**.
- He labels the point at which **NL** crosses **MR** with the letter **B**.
- He draws a line from **B** at an angle of incidence $i = 30°$ to the normal below **MR** and to the left of the normal. He labels the end of this line **A**.
- He places a pin P_1 on line **AB**, as shown in Fig. 3.1. He places another pin P_2 on the line **AB**.
- He places the reflecting face of the mirror vertically on the line **MR**.
- He views the images of pins P_1 and P_2 from the direction indicated by the eye in Fig. 3.1.

(i) On Fig. 3.1, mark with a cross a suitable position for pin P_2 in this experiment. [1]

- He places two pins P_3 and P_4 some distance apart so that pin P_3 and the images of P_2 and P_1 all appear exactly behind pin P_4. The positions of P_3 and P_4 are shown on Fig. 3.1.

(ii) Draw the line joining the positions of P_3 and P_4. Continue the line until it extends at least 7.0 cm beyond **MR**. [2]

(b)

- The student keeps pin P_1 in the same position but moves pin P_2 so that the angle of incidence $i = 40°$.

View solution

- The pin positions P_5 and P_6 for the reflected ray are marked on Fig. 3.1.

(i) Draw the line joining the positions of P_5 and P_6. Continue the line until it extends at least 7.0 cm beyond **MR**.

Label with the letter **Y** the point where the two lines cross beyond **MR**. [1]

(ii) Draw a line from P_1 to **MR** that meets **MR** at a right angle. Measure and record the length *a* of this line.

a = ... [1]

(iii) Draw a line from the point labelled **Y** to **MR** that meets **MR** at a right angle. Measure and record the length *b* of this line.

b = ... [1]

© UCLES 2020

(c)

- The student removes all the pins. He places pin P_7 on the normal at a distance 6.0 cm from the front of the mirror.

View solution

- He views the image of P_7 in the mirror.
- He places pin P_8 on the normal behind the mirror.
- He adjusts the position of P_8 so that the image of the bottom of the pin P_7 and the top of pin P_8 seen over the mirror appear as one pin when viewed from all angles in front of the mirror.

(i) On Fig. 3.1, measure the distance x along the normal between P_8 and the mirror.

x = ... [1]

(ii) Complete the diagram in Fig. 3.2 to show the appearance of the image of pin P_7 and pin P_8 as described in **(c)**.

View solution

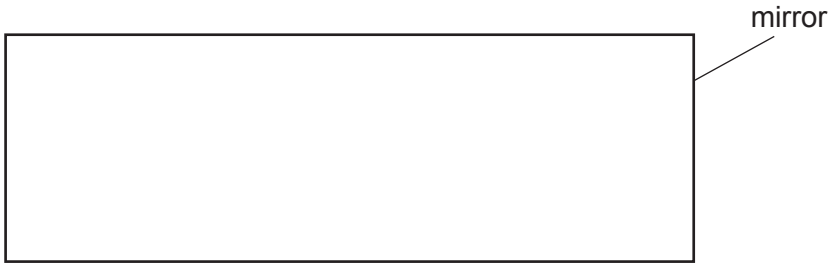

Fig. 3.2

[1]

(d) The student expects the readings to show that the image formed in a plane mirror is the same distance behind the mirror as the object is in front of the mirror. Readings of $a = b$ and x = 6.0 cm will show this.

State whether your readings show that the image formed in a plane mirror is the same distance behind the mirror as the object is in front of the mirror. Justify your statement by reference to the readings.

statement .....

justification .....

.....

[2]

(e) The student carries out this experiment with care. Suggest a practical reason why the results may not be accurate.

.....

..... [1]

[Total: 11]

© UCLES 2020

4 A student investigates the effect of the colour of the surface of a metal container on the rate of loss of heat from the container. She knows that black surfaces are better radiators of thermal energy than white surfaces and wants to investigate the effect of other colours.

View solution

The following apparatus is available:

metal containers each with the outer surface painted a different colour
a thermometer
a stop-watch
a supply of hot water.

She can also use other apparatus and materials that are usually available in a school laboratory.

Plan an experiment to investigate the effect of the colour of the surface of a metal container on the rate of loss of heat from the container.

You should:

- draw a diagram of the apparatus used
- explain briefly how you would carry out the investigation
- state the key variables to be kept constant
- draw a table, or tables, with column headings, to show how you would display your readings (you are **not** required to enter any readings in the table)
- explain how you would use your readings to reach a conclusion.

.....

.....

.....

.....

© UCLES 2020

.....

.....

.....

.....

.....

.....

.....

.....

.....

.....

.....

.....

.....

.....

.....

.....

..... [7]

[Total: 7]

Permission to reproduce items where third-party owned material protected by copyright is included has been sought and cleared where possible. Every reasonable effort has been made by the publisher (UCLES) to trace copyright holders, but if any items requiring clearance have unwittingly been included, the publisher will be pleased to make amends at the earliest possible opportunity.

To avoid the issue of disclosure of answer-related information to candidates, all copyright acknowledgements are reproduced online in the Cambridge Assessment International Education Copyright Acknowledgements Booklet. This is produced for each series of examinations and is freely available to download at www.cambridgeinternational.org after the live examination series.

Cambridge Assessment International Education is part of the Cambridge Assessment Group. Cambridge Assessment is the brand name of the University of Cambridge Local Examinations Syndicate (UCLES), which itself is a department of the University of Cambridge.