Cambridge Assessment International Education

# Cambridge IGCSE™

| | | | | | | | | | |
|---|---|---|---|---|---|---|---|---|---|
| CANDIDATE NAME | | | | | | | | | |
| CENTRE NUMBER | | | | | | CANDIDATE NUMBER | | | |

**PHYSICS** **0625/62**

Paper 6 Alternative to Practical **May/June 2020**

**1 hour**

You must answer on the question paper.

No additional materials are needed.

**INSTRUCTIONS**

- Answer **all** questions.
- Use a black or dark blue pen. You may use an HB pencil for any diagrams or graphs.
- Write your name, centre number and candidate number in the boxes at the top of the page.
- Write your answer to each question in the space provided.
- Do **not** use an erasable pen or correction fluid.
- Do **not** write on any bar codes.
- You may use a calculator.
- You should show all your working and use appropriate units.

**INFORMATION**

- The total mark for this paper is 40.
- The number of marks for each question or part question is shown in brackets [ ].

This document has **12** pages. Blank pages are indicated.

© UCLES 2020

**1** A student investigates the period of a pendulum. Fig. 1.1 and Fig. 1.2 show the apparatus she uses.

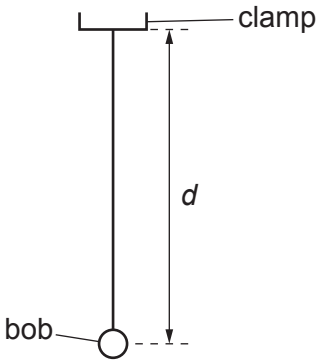


**Fig. 1.1**

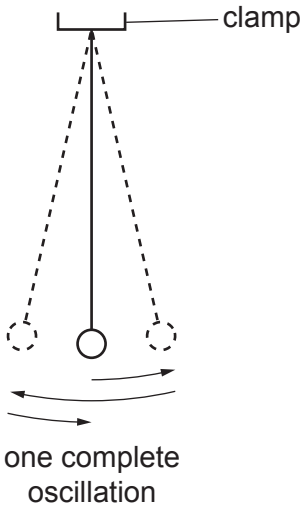


**Fig. 1.2**

**(a)** Explain briefly, with the help of a diagram, how you would use a metre rule and set square to measure the length *d* of a pendulum as accurately as possible.

View solution

Diagram:

.....

.....

..... [3]

**(b)** The student adjusts the pendulum so that $d$ = 50.0 cm. She displaces the bob slightly and releases it so that it swings. Fig. 1.2 shows one complete oscillation of the pendulum. She measures the time $t_1$ for 20 complete oscillations.

View solution

**(i)** Record the time $t_1$ shown in Fig. 1.3.




**Fig. 1.3**

$t_1$ = ..... [1]

**(ii)** Calculate the period $T_1$ of the pendulum. The period is the time for one complete oscillation.

View solution

$T_1$ = ..... [1]

**(c)** The student adjusts the pendulum until the distance $d$ is 100.0 cm.

View solution

She repeats the procedure and records the time $t_2$ for 20 oscillations and the period $T_2$.

$t_2$ = 39.80 s

$T_2$ = 1.99 s

She measures the mass $m_A$ of the pendulum bob. The reading on the balance is shown in Fig. 1.4.

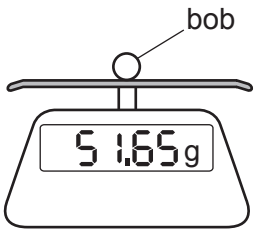


**Fig. 1.4**

Record mass $m_A$ of the pendulum bob to the nearest gram.

$m_A$ = ..... g [1]

The student repeats the procedure using a pendulum bob of mass $m_B$.

$m_B$ = 109 g

She obtains these results:

distance $d$ = 50.0 cm

period $T_3$ = 1.39 s

distance $d$ = 100.0 cm

period $T_4$ = 2.02 s

© UCLES 2020

**(d)** **(i)** Using the results $T_1$, $T_2$, $T_3$ and $T_4$, for the period of each of the pendulums, tick (✓) the response that matches your results within the limits of experimental accuracy.

View solution

☐ the period $T$ is affected by $d$ only

☐ the period $T$ is affected by both $d$ and $m$

☐ the period $T$ is affected by $m$ only

☐ the period $T$ is not affected by $d$ or $m$

[1]

**(ii)** Justify your answer to **(d)(i)** by reference to the results.

View solution

.....

..... [1]

**(e)** The student now investigates the effect of the size of the oscillations on the period of the pendulum.

**(i)** Suggest briefly how you would measure the size of an oscillation. You may draw a diagram.

View solution

.....

..... [2]

**(ii)** State **one** variable that you would keep constant during this part of the investigation.

..... [1]

[Total: 11]

View solution

**2** A student determines the resistance of a resistance wire.

Fig. 2.1 shows the circuit he uses.

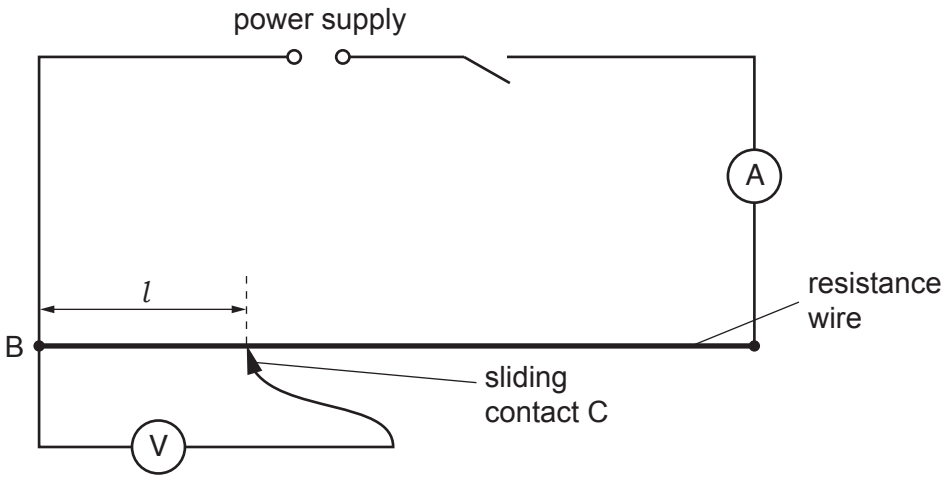


**Fig. 2.1**

**(a)**

- The student places the sliding contact C on the resistance wire at a distance $l$ = 10.0 cm from B.
- Record, in the first row of Table 2.1, the potential difference $V$ across the length $l$ = 10.0 cm of resistance wire, as shown on the voltmeter in Fig. 2.2.

View solution

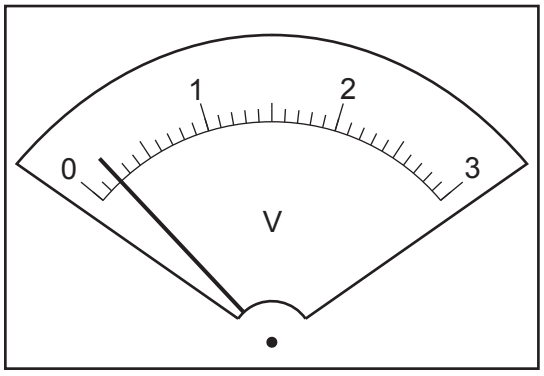


**Fig. 2.2**

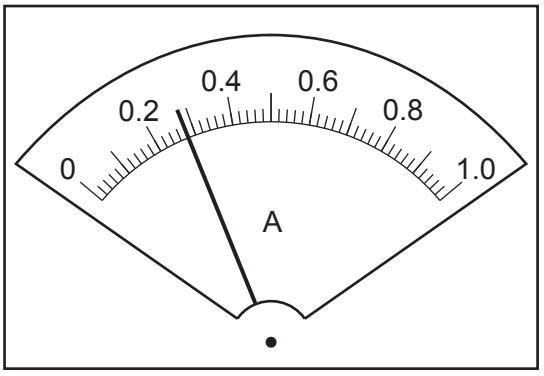


**Fig. 2.3**

- Record, in the first row of Table 2.1, the current $I$ in the circuit as shown in Fig. 2.3.
- Complete the column headings in Table 2.1.

© UCLES 2020

**Table 2.1**

| $l$/ | $V$/ | $I$/ |
|---|---|---|
| 10.0 | | |
| 30.0 | 0.7 | 0.30 |
| 50.0 | 1.1 | 0.27 |
| 70.0 | 1.5 | 0.28 |
| 90.0 | 2.1 | 0.29 |

[3]

**(b)** The student repeats the procedure using $l$ = 30.0 cm, 50.0 cm, 70.0 cm and 90.0 cm. The readings are shown in Table 2.1.

Plot a graph of $V$/V ($y$-axis) against $l$/cm ($x$-axis). Start both axes at the origin (0,0).

View solution

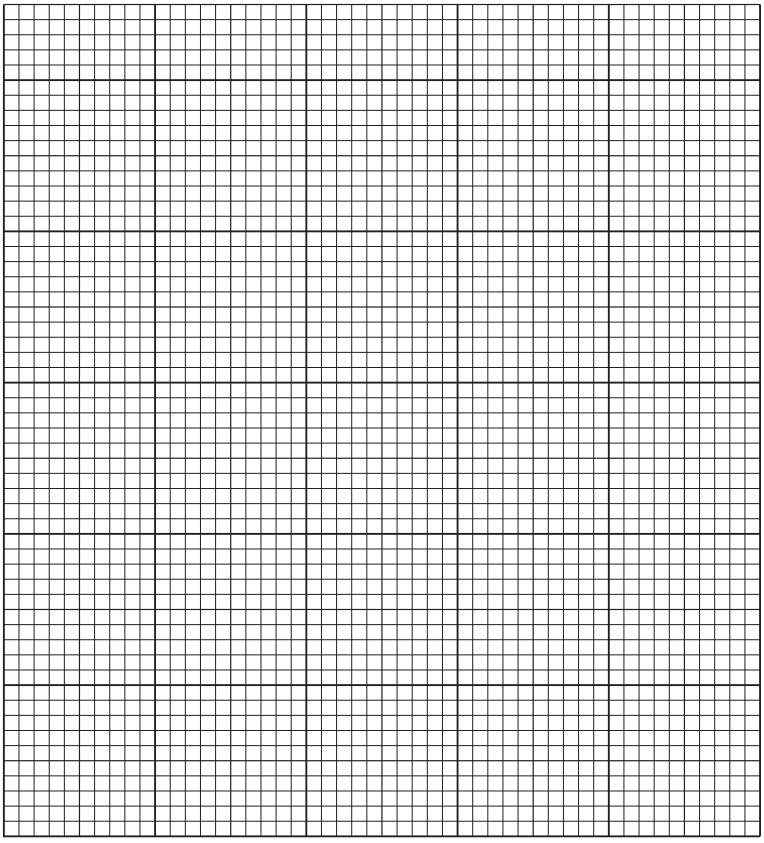

[4]

**(c)** **(i)** Write a conclusion about the value of the current $I$ in the circuit as the position of the sliding contact C is changed.

.....

..... [1]

**(ii)** Justify your conclusion by reference to your results.

View solution

.....

..... [1]

**(d)** Using the graph, determine the potential difference $V_L$ when the length $l$ = 60.0 cm.

View solution

Show clearly on the graph how you obtained your result.

$V_L$ = ..... [2]

[Total: 11]

**3** A student investigates some thermal properties of sand and water.

Fig. 3.1 shows the apparatus.

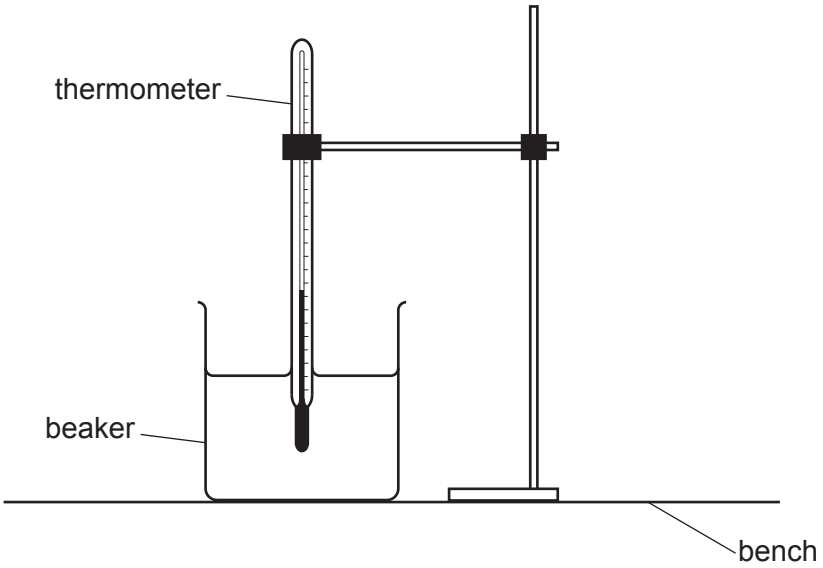


**Fig. 3.1**

**(a)** The thermometer in Fig. 3.2 shows the room temperature $\theta_S$ at the beginning of the experiment. Record $\theta_S$.

View solution

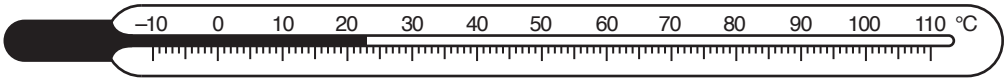


**Fig. 3.2**

$\theta_S$ = ..... °C [1]

**(b)** The student is supplied with hot water at a temperature $\theta_H$. She records the temperature of the hot water.

$\theta_H$ = 84 °C

She pours 100 $cm^3$ of hot water into a beaker that contains sand. Initially, the sand is at room temperature.

She measures the highest temperature $\theta_M$ of the mixture.

View solution

$\theta_M$ = 70 °C

**(i)** Calculate the rise in temperature $\theta_R$ of the sand using the equation $\theta_R = (\theta_M - \theta_S)$.

$\theta_R$ = ..... °C [1]

**(ii)** Explain briefly what the student does after pouring the hot water into the sand and before taking the temperature, in order to obtain a reliable value for $\theta_M$.

.....

..... [1]

© UCLES 2020

**(iii)** Calculate the fall in temperature $\theta_F$ of the hot water using the equation $\theta_F = (\theta_H - \theta_M)$.

$\theta_F$ = ..... °C

Calculate the ratio $S$ using the equation $S = \frac{\theta_R}{\theta_F}$. Give your answer to a suitable number of significant figures for this experiment.

$S$ = ..... [1]

**(c)** The student pours 100 $cm^3$ of the hot water into a clean beaker that contains 100 $cm^3$ of water at room temperature. She records the highest temperature $\theta_M$ of the mixture.

$\theta_M$ = 49° C

Calculate the rise in temperature $\theta_R$ of the cold water using the equation $\theta_R = (\theta_M - \theta_S)$. Use the value of room temperature $\theta_S$ recorded in **(a)**.

View solution

$\theta_R$ = .....

Calculate the fall in temperature $\theta_F$ of the hot water using the equation $\theta_F = (\theta_H - \theta_M)$.

$\theta_F$ = .....

Calculate the ratio $W$ using the equation $W = \frac{\theta_R}{\theta_F}$.

$W$ = ..... [2]

**(d)** The student studies the thermal properties of sand and water. She predicts that $S$ should be equal to 6 × $W$.

State whether the results support the prediction. Justify your answer by reference to the readings.

View solution

statement .....

justification .....

.....

.....

[2]

**(e)** Suggest **two** temperatures that it would be sensible to keep constant when carrying out the experiments.

View solution

1. .....

2. .....

[2]

**(f)** The student measures the volume of the dry sand using a measuring cylinder before carrying out the experiment. Tick (✓) the boxes that show the precautions that she should take in order to obtain an accurate reading.

View solution

- ☐ Take the reading at the bottom of the meniscus.
- ☐ Tap the measuring cylinder to make sure the top of the sand is horizontal.
- ☐ View the scale of the measuring cylinder at right angles.

[1]

[Total: 11]

**4** A student investigates the bending of 1 m length strips of different materials. She compares how far they bend when loaded at one end.

Plan an experiment to investigate how the material from which the strips are made affects the bending of the strips when loaded at one end.

View solution

The following apparatus is available to the student:

strips of wood, plastic, steel and aluminium, each of length 1 m
a set of slotted masses
a metre rule
a G-clamp (used to hold the strips to the laboratory bench).

Other apparatus normally available in a school laboratory can also be used.

In your plan, you should:

- draw a diagram to show the arrangement of the apparatus
- explain briefly how you would carry out the investigation, including the measurements you would take
- state the key variables to be kept constant
- draw a suitable table, with column headings, to show how you would display your readings (you are **not** required to enter any readings in the table)
- explain how you would use the results to reach a conclusion.

.....

.....

.....

.....

© UCLES 2020

.....

.....

.....

.....

.....

.....

.....

.....

.....

.....

.....

.....

.....

.....

.....

.....

..... [7]

[Total: 7]

Permission to reproduce items where third-party owned material protected by copyright is included has been sought and cleared where possible. Every reasonable effort has been made by the publisher (UCLES) to trace copyright holders, but if any items requiring clearance have unwittingly been included, the publisher will be pleased to make amends at the earliest possible opportunity.

To avoid the issue of disclosure of answer-related information to candidates, all copyright acknowledgements are reproduced online in the Cambridge Assessment International Education Copyright Acknowledgements Booklet. This is produced for each series of examinations and is freely available to download at www.cambridgeinternational.org after the live examination series.

Cambridge Assessment International Education is part of the Cambridge Assessment Group. Cambridge Assessment is the brand name of the University of Cambridge Local Examinations Syndicate (UCLES), which itself is a department of the University of Cambridge.