Cambridge Assessment International Education

Cambridge IGCSE™

CANDIDATE NAME									
CENTRE NUMBER						CANDIDATE NUMBER			

PHYSICS **0625/63**

Paper 6 Alternative to Practical **May/June 2020**

1 hour

You must answer on the question paper.

No additional materials are needed.

INSTRUCTIONS

- Answer **all** questions.
- Use a black or dark blue pen. You may use an HB pencil for any diagrams or graphs.
- Write your name, centre number and candidate number in the boxes at the top of the page.
- Write your answer to each question in the space provided.
- Do **not** use an erasable pen or correction fluid.
- Do **not** write on any bar codes.
- You may use a calculator.
- You should show all your working and use appropriate units.

INFORMATION

- The total mark for this paper is 40.
- The number of marks for each question or part question is shown in brackets [ ].

This document has **16** pages. Blank pages are indicated.

© UCLES 2020

1 A student determines the weight of a metre rule.
She uses the apparatus shown in Fig. 1.1.
The metre rule is supported by a pivot **at the 10.0 cm mark** and is suspended from a forcemeter by a loop of thread at the 90.0 cm mark.

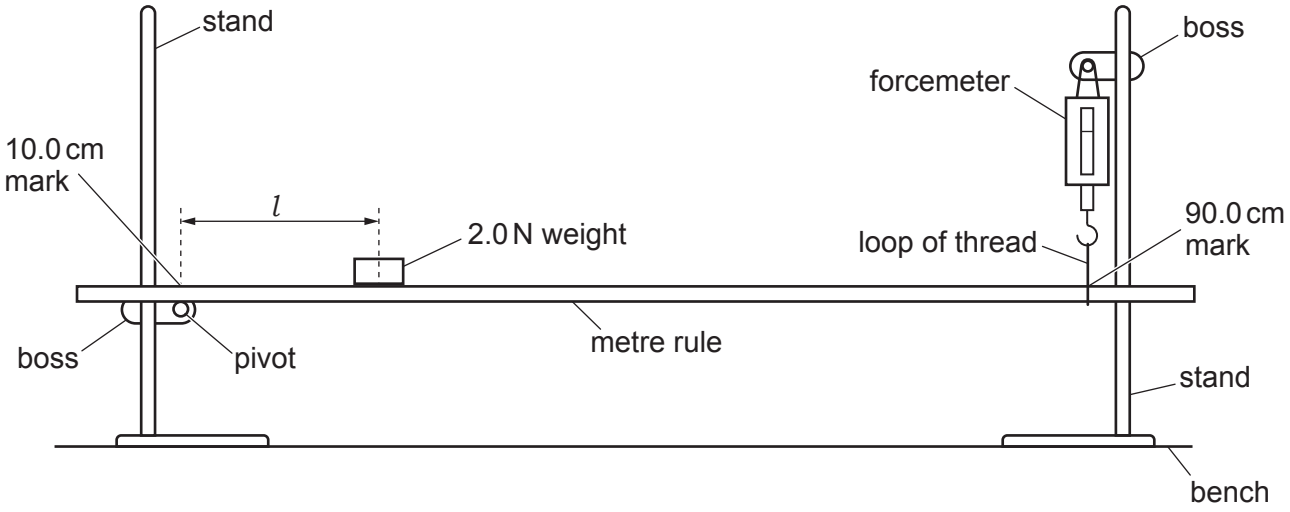

Fig. 1.1

(a) The student places a 2.0 N weight at a distance l from the pivot.
She then adjusts the height of the clamp holding the pivot so that the metre rule is horizontal.
She reads the force F on the forcemeter.
Fig. 1.2 shows the weight and the metre rule from above.
Fig. 1.3 shows the reading on the forcemeter.

View solution

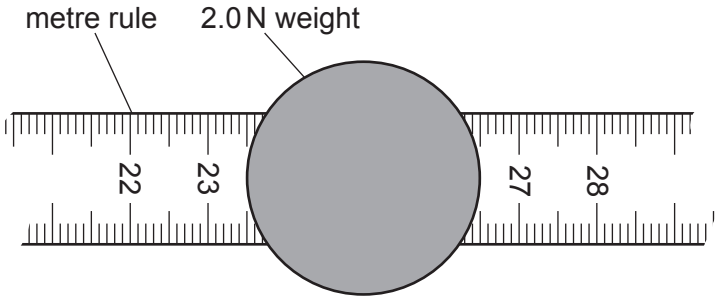

Fig. 1.2 (not to scale)

(i) Calculate the value of l from readings taken from Fig. 1.2.
Show your working clearly.

l = ... cm [2]

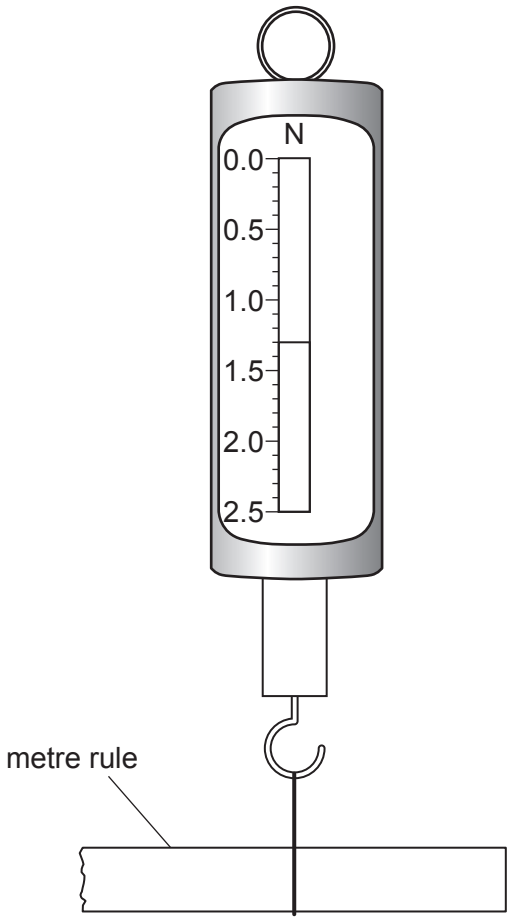

Fig. 1.3

(ii) Read the value *F* shown on the forcemeter in Fig. 1.3.

View solution

F = ... N [1]

(iii) Explain how the student makes sure that the rule is horizontal before taking the reading. You may draw a diagram.

View solution

.....

.....

..... [1]

(b) The student carries out the procedure for values of l = 20.0 cm, 30.0 cm, 40.0 cm, 50.0 cm and 60.0 cm. Her readings are shown in Table 1.1.

View solution

Table 1.1

l / cm	F / N
20.0	1.35
30.0	1.60
40.0	1.90
50.0	2.15
60.0	2.45

Plot a graph of F / N (y-axis) against l / cm (x-axis).
Start your axes from the origin (0,0).

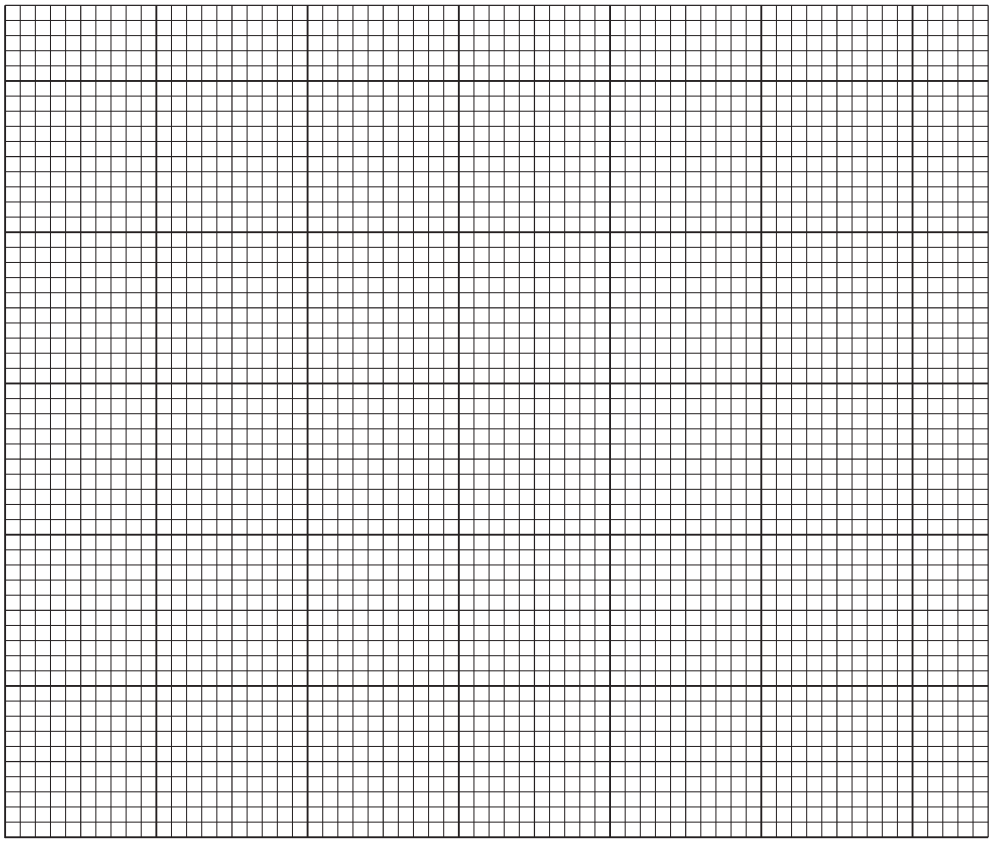

[4]

(c) (i) From your graph determine F_0, the value of F when l = 0.

View solution

F_0 = ... N [1]

(ii) Calculate the weight W_R of the metre rule, using the equation $W_R = 2 \times F_0$.

View solution

W_R = ... N [1]

© UCLES 2020

(d) Another student carrying out this experiment finds it difficult to be sure that he has placed the centre of the 2.0 N weight on the metre rule at the correct value of l.

Suggest a more precise method of applying a 2.0 N load to the metre rule in this experiment. Explain why this method is an improvement.

.....

.....

..... [1]

[Total: 11]

View solution

2 Some students investigate a circuit containing different combinations of resistors.
Part of the circuit they are using is shown in Fig. 2.1.

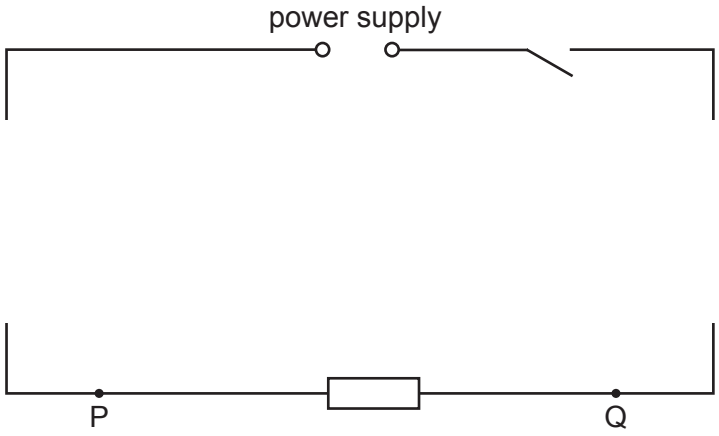

Fig. 2.1

View solution

(a) (i) On Fig. 2.1, complete the circuit to show:

- an ammeter connected to measure the current in the circuit
- a voltmeter connected to measure the potential difference (p.d.) across terminals P and Q.

[2]

(ii) A student measures the potential difference V_1 across terminals P and Q and the current I_1 in the circuit.

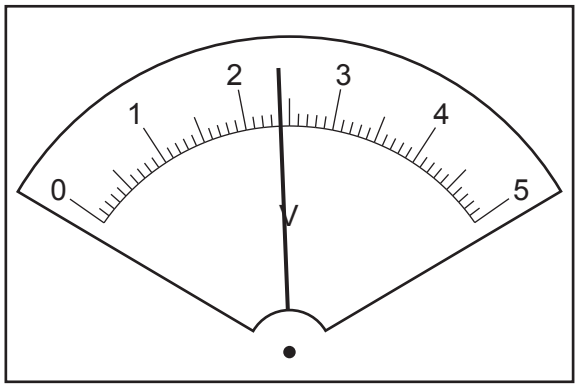

Fig. 2.2

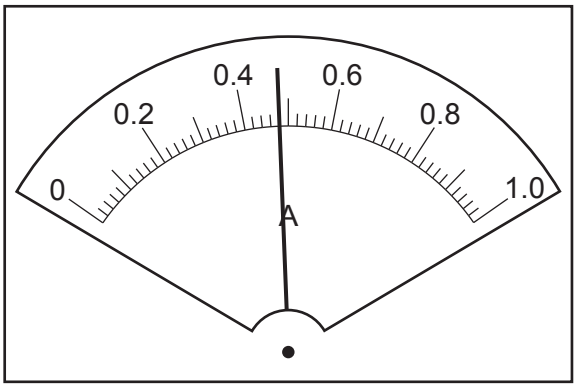

Fig. 2.3

Read the values of V_1 and I_1 shown on the meters in Fig. 2.2 and Fig. 2.3.

V_1 = ... V

I_1 = ... A
[2]

© UCLES 2020

(iii) Calculate a resistance R_1 using your values from **(a)(ii)** and the equation $R_1 = \frac{V_1}{I_1}$.

R_1 = ... [1]

(b) The student connects two resistors in series between terminals P and Q, as shown in Fig. 2.4.

View solution



Fig. 2.4

He measures the potential difference V_2 across terminals P and Q and the current I_2 in the circuit.

V_2 = ... 2.7 V

I_2 = ... 0.26 ..... A

Calculate a resistance R_2 using these values and the equation $R_2 = \frac{V_2}{(I_2 \times 2)}$.

R_2 = ... [1]

(c) The student connects the two resistors in parallel between terminals P and Q, as shown in Fig. 2.5.

View solution

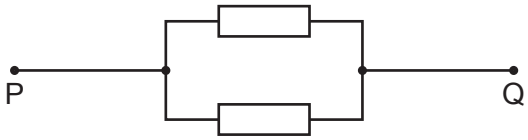

Fig. 2.5

He measures the potential difference V_3 across terminals P and Q and the current I_3 in the circuit.

V_3 = ... 2.3 V

I_3 = ... 0.94 ..... A

Calculate a resistance R_3 using these values and the equation $R_3 = \frac{(V_3 \times 2)}{I_3}$.

R_3 = ... [1]

© UCLES 2020

(d) Another student suggests that R_1, R_2 and R_3 should be equal.
State whether your results support this suggestion. Justify your statement with reference to your results.

statement .....

justification .....

.....

[2]

(e) **(i)** A student wants to determine R_1 by using a potential divider to vary the potential difference in the circuit. Draw the symbol for a potential divider.

View solution

[1]

(ii) Briefly explain how the use of a potential divider may give a more reliable value for R_1 than using the procedure carried out in **(a)**.

.....

.....

..... [1]

[Total: 11]

View solution

3 A student determines the focal length of a converging lens.
She uses the apparatus shown in Fig. 3.1.

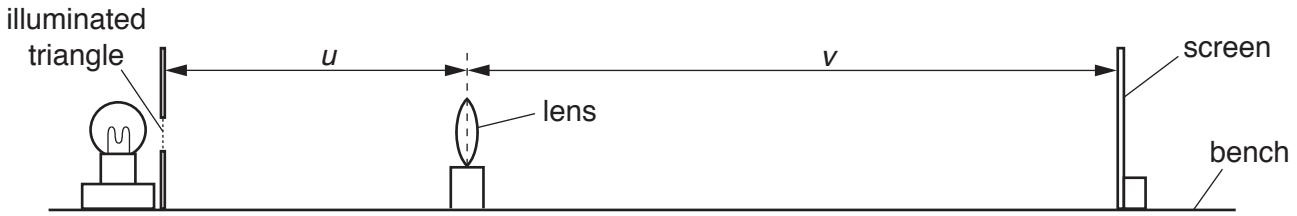

Fig. 3.1

Method 1

(a) The student sets the distance *U* between the illuminated triangle and the lens.
She moves the screen until a sharp image of the triangle is seen on the screen.

View solution

(i) On Fig. 3.1, measure the distance *u* between the illuminated triangle and the lens.

u = ...

On Fig. 3.1, measure the distance *v* between the lens and the screen.

v = ...
[1]

(ii) Fig. 3.1 is drawn to 1/5th scale.

Calculate the actual distance *U* between the illuminated triangle and the lens in the experiment.

U = ...

Calculate the actual distance *V* between the lens and the screen in the experiment.

View solution

V = ...
[1]

(iii) Calculate a value f_1 for the focal length of the lens. Use the equation

View solution

$$f_1 = \frac{UV}{(U + V)} .$$

f_1 = ... [1]

(iv) Briefly describe a technique to obtain an image on the screen that is as sharp as possible in this experiment.

.....

.....

..... [1]

View solution



Fig. 3.2

Method 2

(b) The student keeps the screen in the same position.

She moves the lens closer to the screen, as shown in Fig. 3.2, until another sharp image of the triangle is seen on the screen.

View solution

(i) Measure the distance v between the lens and the screen as indicated in Fig. 3.2.

v = ...

Fig. 3.2 is drawn to 1/5th scale.

Calculate the actual distance V between the lens and the screen in the experiment.

V = ...

[1]

(ii) The illuminated triangle and its image are shown full size in Fig. 3.3 and Fig. 3.4.

View solution

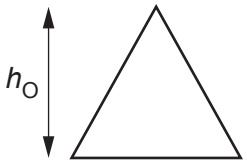

Fig. 3.3



Fig. 3.4

Measure h_O, the height of the illuminated triangle, as shown in Fig. 3.3.

h_O = ...

Measure h_I, the height of the image on the screen, as shown in Fig. 3.4.

h_I = ...
[1]

(iii) Calculate a value for the magnification M using the equation $M = \frac{h_I}{h_O}$.

View solution

M = ... [1]

(iv) Calculate a second value f_2 for the focal length of the lens using the equation $f_2 = \frac{V}{(M + 1)}$ and the value of V from **(b)(i)**.

View solution

f_2 = ... [1]

(c) State **one** precaution the student must take to ensure that the **measurements** of U and V in this experiment are as reliable as possible.

.....

..... [1]

(d) **(i)** Explain why **Method 2** is likely to produce a less accurate value for the focal length than **Method 1**.

.....

.....

..... [1]

(ii) Suggest **one** improvement to make **Method 2** more accurate.

View solution

.....

.....

..... [1]

[Total: 11]

© UCLES 2020

4 A student investigates the factors affecting the electrical output of a solar cell. A solar cell is a device which transforms light energy into electrical energy.

Plan an experiment which will enable him to investigate how the potential difference across the terminals of the solar cell varies with the angle of the incident light.

View solution

The apparatus available includes:

a solar cell as shown in Fig. 4.1
a laboratory lamp.

In your plan, you should:

- list any additional apparatus needed
- state the key variables to be kept constant
- explain briefly how to carry out the experiment, including any precautions that must be taken to ensure reliable results
- draw a table, with column headings, to show how to display the readings (you are **not** required to enter any readings in the table)
- explain how to use the readings to reach a conclusion.

You may add to Fig. 4.1 or draw another diagram if it helps to explain your plan.

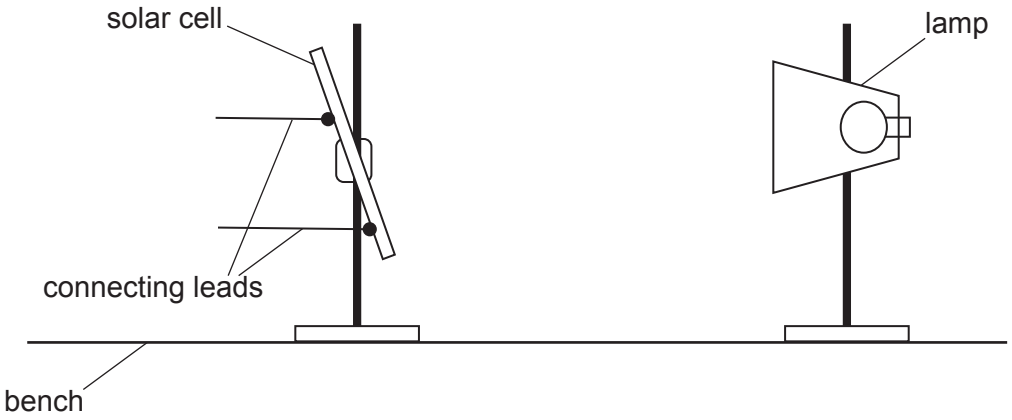

Fig. 4.1

© UCLES 2020

.....

.....

.....

.....

.....

.....

.....

.....

.....

.....

.....

.....

.....

.....

.....

.....

.....

.....

.....

..... [7]

[Total: 7]

BLANK PAGE

BLANK PAGE

BLANK PAGE

Permission to reproduce items where third-party owned material protected by copyright is included has been sought and cleared where possible. Every reasonable effort has been made by the publisher (UCLES) to trace copyright holders, but if any items requiring clearance have unwittingly been included, the publisher will be pleased to make amends at the earliest possible opportunity.

To avoid the issue of disclosure of answer-related information to candidates, all copyright acknowledgements are reproduced online in the Cambridge Assessment International Education Copyright Acknowledgements Booklet. This is produced for each series of examinations and is freely available to download at www.cambridgeinternational.org after the live examination series.

Cambridge Assessment International Education is part of the Cambridge Assessment Group. Cambridge Assessment is the brand name of the University of Cambridge Local Examinations Syndicate (UCLES), which itself is a department of the University of Cambridge.

© UCLES 2020