Cambridge Assessment International Education

Cambridge IGCSE™

CANDIDATE NAME									
CENTRE NUMBER						CANDIDATE NUMBER				

PHYSICS **0625/31**

Paper 3 Theory (Core) **May/June 2021**

1 hour 15 minutes

You must answer on the question paper.

No additional materials are needed.

INSTRUCTIONS

- Answer **all** questions.
- Use a black or dark blue pen. You may use an HB pencil for any diagrams or graphs.
- Write your name, centre number and candidate number in the boxes at the top of the page.
- Write your answer to each question in the space provided.
- Do **not** use an erasable pen or correction fluid.
- Do **not** write on any bar codes.
- You may use a calculator.
- You should show all your working and use appropriate units.
- Take the weight of 1.0 kg to be 10 N (acceleration of free fall = 10 m / s^2).

INFORMATION

- The total mark for this paper is 80.
- The number of marks for each question or part question is shown in brackets [ ].

This document has **16** pages. Any blank pages are indicated.

© UCLES 2021

1 Fig. 1.1 shows a speed–time graph for a car.

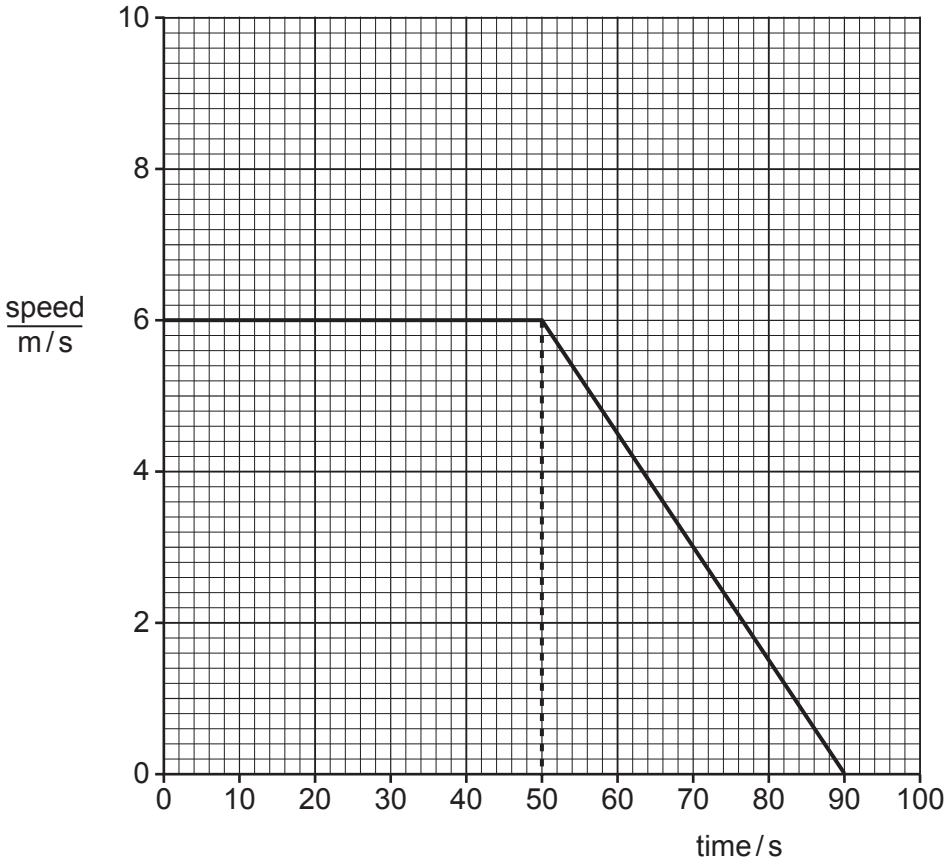

Fig. 1.1

(a) (i) Describe the motion of the car from 0 to 50 s, as shown in Fig. 1.1.

View solution

.....

.....

[1]

(ii) Describe the motion of the car from 50 s to 90 s, as shown in Fig. 1.1.

View solution

.....

.....

.....

[1]

(iii) Calculate the distance travelled by the car between 50 s and 90 s.

View solution

distance travelled = ... m [3]

(b) A motorcycle travels at a constant speed.

View solution

(i) The motorcycle travels 710 m in 87 s.

Calculate the speed of the motorcycle and show that it is close to 8 m / s.

[3]

(ii) The motorcycle in part **(b)(i)** travels at a constant speed for 87 s.

On Fig. 1.1, draw the speed–time graph for the motorcycle. [2]

[Total: 10]

View solution

2 A liquid-in-glass thermometer contains mercury.

View solution

(a) The mass of the mercury in the thermometer is 12 g.

(i) Calculate the weight of the mercury.

weight of mercury = ... N [3]

View solution

(ii) The 12 g of mercury has a volume of 0.88 cm^3.

Calculate the density of mercury.

density of mercury = ... g/cm^3 [3]

View solution

(b) The mercury in the thermometer expands when its temperature rises.

(i) State what happens to the mass of the mercury when its temperature rises.
Tick (✓) **one** box.

mass decreases	
mass stays the same	
mass increases	

[1]

View solution

(ii) State what happens to the density of the mercury when its temperature rises.
Tick (✓) **one** box.

density decreases	
density stays the same	
density increases	

[1]

[Total: 8]

© UCLES 2021

3 A plank balances horizontally on a log of wood, which acts as a pivot.

(a) A girl sits on one end of the plank, and her brother pushes down on the other end to make the plank balance horizontally. Fig. 3.1 shows the arrangement.

View solution

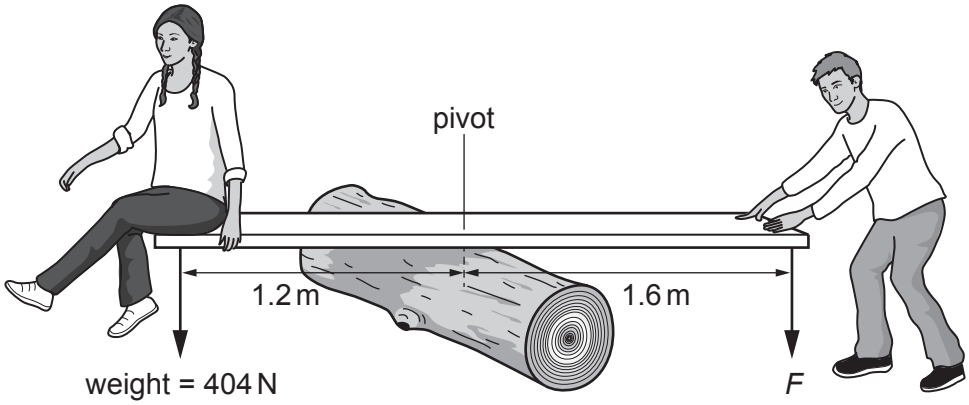

Fig. 3.1 (not to scale)

Calculate the moment of the girl's weight about the pivot and show that it is close to 480 N m.

[3]

(b) The plank balances horizontally when the boy pushes down with a force F at a distance of 1.6 m from the pivot.

Calculate the size of force F.

View solution

force F = ... N [3]

[Total: 6]

4 A country needs to build new power stations to provide electricity for homes and industry.

One type of power station is a coal-fired power station.

View solution

(a) Describe how the energy stored in the coal is used in a coal-fired power station to generate electrical energy.

.....

.....

.....

.....

.....

..... [4]

(b) Some people in the country argue against building a new coal-fired power station.

View solution

They say that the power station is expensive and not very efficient.

Explain the meaning of *not very efficient*.

.....

..... [1]

(c) Apart from cost and efficiency, give **two** other reasons for **not** building a coal-fired power station.

1. .....

2. .....

[2]

[Total: 7]

View solution

5 **(a)** A man starts pulling his suitcase across the floor.

View solution

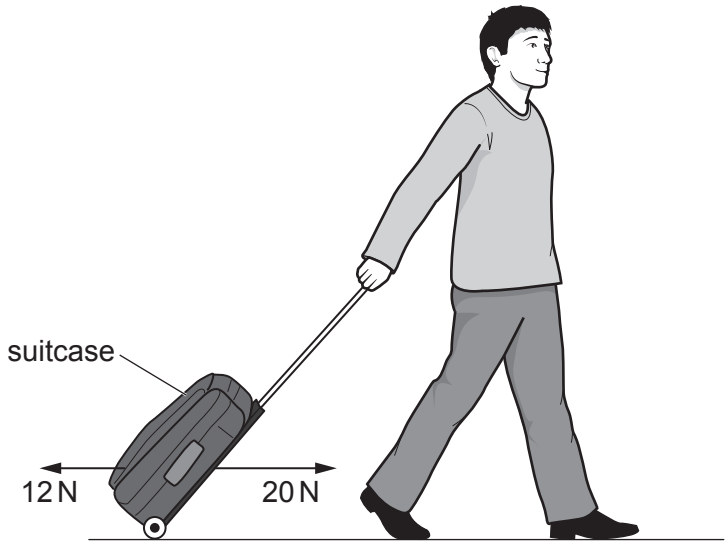

Fig. 5.1 (not to scale)

(i) Fig. 5.1 shows the horizontal forces acting on the suitcase.

Calculate the resultant horizontal force on the suitcase.

size of force = ... N

direction .....

[2]

(ii) After a short time, the suitcase is moving at a constant speed.

Suggest values for the sizes of the two horizontal forces on the suitcase when it is moving at a constant speed.

View solution

pulling force = ... (N)

friction force = ... (N) [1]

(b) The total downward force of the suitcase on the ground is 150 N. The suitcase has two wheels. Each wheel has an area of 0.60 cm^2 touching the ground.

View solution

Calculate the pressure of the suitcase on the ground.

pressure on the ground = ... N/cm^2 [4]

[Total: 7]

© UCLES 2021

6 Fig. 6.1 shows a smoke cell. The smoke cell contains air molecules and smoke particles. A student views the motion of the smoke particles in the smoke cell by using a microscope.

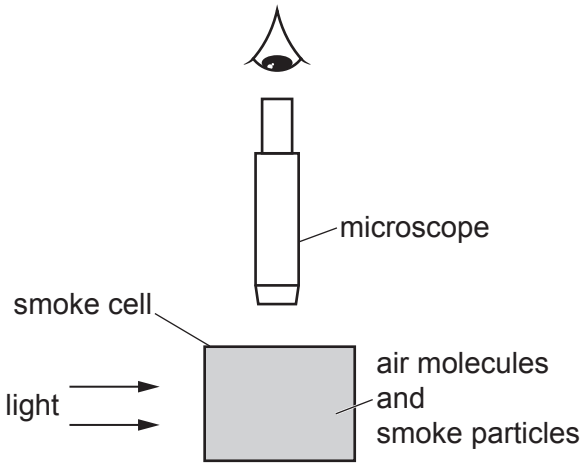

Fig. 6.1

Fig. 6.2 shows the path of one of the smoke particles.

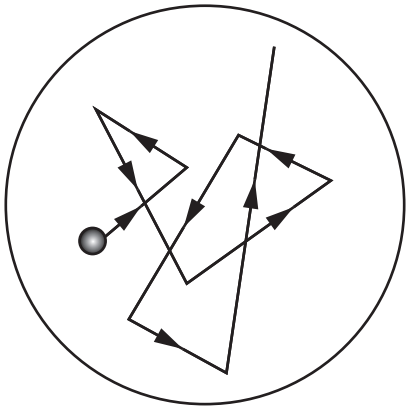

Fig. 6.2

(a) State the term used for the motion of the smoke particle.

View solution

..... [1]

(b) Explain the motion of the smoke particle in Fig. 6.2.

View solution

.....

.....

.....

..... [3]

[Total: 4]

© UCLES 2021

7 A narrow beam of white light enters a glass prism and splits into the colours of the visible spectrum, as shown in Fig. 7.1.

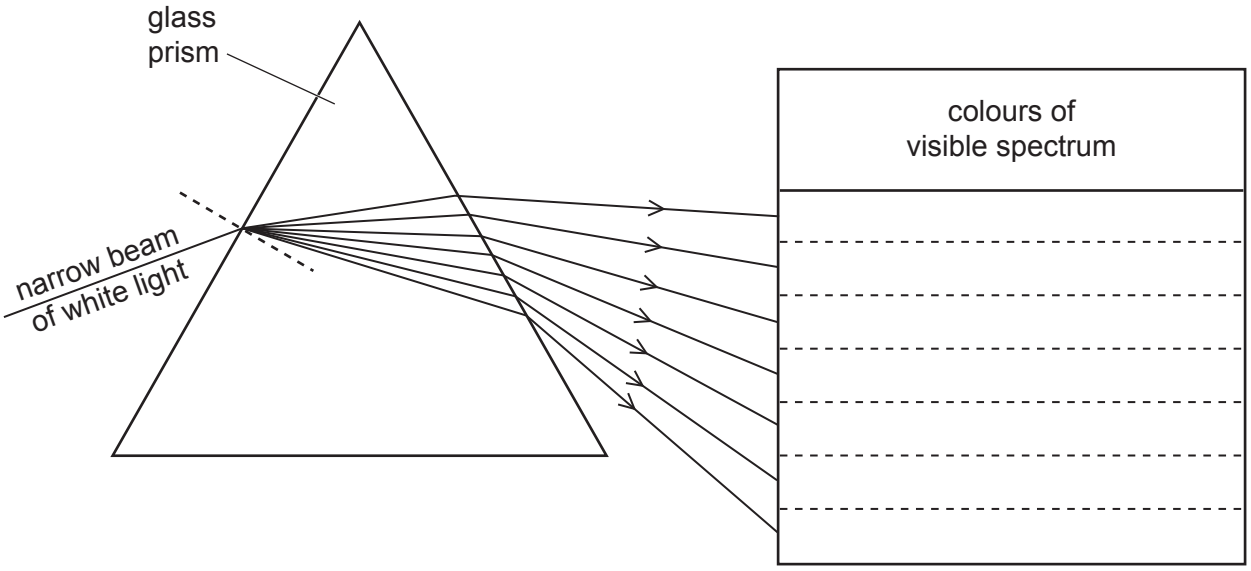

Fig. 7.1

(a) The rays leaving the prism represent the seven main colours of the visible spectrum.

View solution

Complete the labelling on Fig. 7.1 by writing the colours of the visible spectrum in the table.

[2]

(b) State the term used to describe:

View solution

(i) the bending of the light as it enters the prism

..... [1]

(ii) the different amounts of bending that produce the spectrum.

View solution

..... [1]

(c) A student incorrectly writes some sentences about electromagnetic waves. His teacher circles a mistake in each sentence.

In the table, write a suitable correction for each mistake. The first one has been done for you.

student's sentences	correction
the speed of light is (faster than) radio waves in a vacuum	the same as
(X-rays) are used in television remote controllers	
(radio waves) have the highest frequencies in the electromagnetic spectrum	

[2]

View solution

[Total: 6]

8 **(a)** A loudspeaker is producing a sound.

View solution

Choose words from the box to complete the sentences about sound.

amplitude	frequency	speed	wavelength

(i) To increase the loudness of the sound, increase the ..... of the sound wave. [1]

(ii) To increase the pitch of the sound, increase the ..... of the sound wave. [1]

(b) Two students determine the speed of sound in air.
The students stand together, 80 m from a large brick wall as shown in Fig. 8.1.

View solution

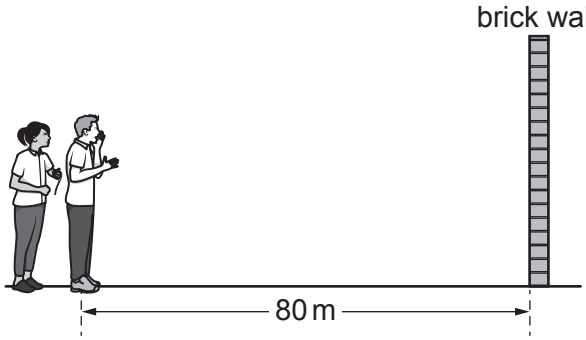

Fig. 8.1 (not to scale)

One student shouts and as he shouts the other student starts a stop-watch. She stops the stop-watch when she hears the echo of the shout.
The reading on the stop-watch is 0.56 s.

(i) State the **total** distance the sound travels during the 0.56 s.

distance = ... m [1]

(ii) Calculate the speed of sound in air using the measurements given in part **(b)**.

View solution

speed of sound = ... m/s [3]

(iii) The students' value for the speed of sound is **not** accurate.

View solution

Suggest **two** ways of improving the students' experiment.

1. .....

2. .....

[2]

[Total: 8]

9 **(a)** The box lists four materials.

View solution

aluminium	iron	plastic	wood

Use words from the box to answer parts **(i)** and **(ii)**.
Each word may be used once, more than once or not at all.

(i) State **all** materials that are electrical insulators.

..... [1]

(ii) State **one** example of a magnetic material.

View solution

..... [1]

(b) Fig. 9.1 shows two magnets, P and Q, which are repelling each other.

View solution



Fig. 9.1

On magnet P, the N pole is labelled N.

On Fig. 9.1, label the other pole on magnet P and **both** poles on magnet Q. [1]

(c) One advantage that electromagnets have, compared with permanent magnets, is that their strength can easily be altered.

State **one** other advantage of an electromagnet compared with a permanent magnet.

View solution

..... [1]

(d) A student wants to make the strongest electromagnet possible.

View solution

Indicate which properties produce the **strongest** electromagnet.

Tick (✓) **one** box in each list.

number of turns in the coil		**material in the core**		**size of current in the coil**	
200 turns	☐	air	☐	20 mA	☐
100 turns	☐	iron	☐	0.5 A	☐
50 turns	☐	plastic	☐	3.0 A	☐

[3]

[Total: 7]

10 (a) Fig. 10.1 shows a lamp and a resistor connected in a circuit.

View solution

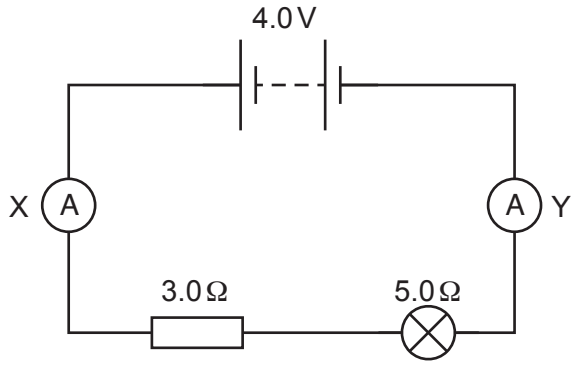

Fig. 10.1

(i) Determine the combined resistance of the 3.0 Ω resistor and the 5.0 Ω lamp.

combined resistance = ... Ω [1]

(ii) The reading on ammeter X is 0.50 A.

View solution

State the reading on ammeter Y.

reading on ammeter Y = ... A [1]

(b) In another circuit, the 3.0 Ω resistor and the 5.0 Ω lamp are connected in parallel, as shown in Fig. 10.2.

View solution

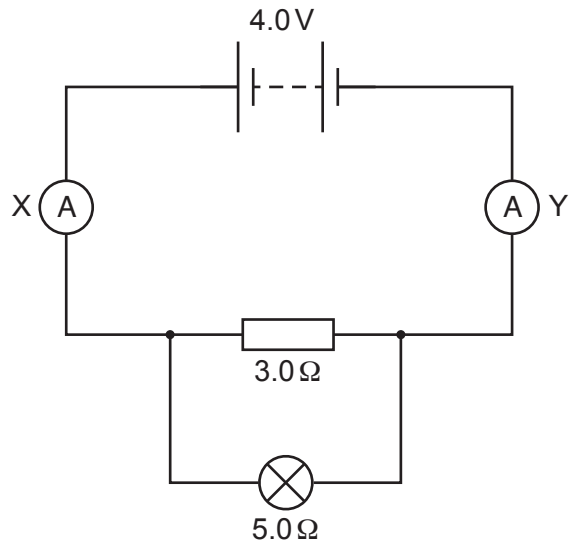

Fig. 10.2

The lamp and resistor have changed from a series to a parallel combination.

State and explain the effect of this change on the current in ammeter X.

.....

.....

.....

..... [3]

(c) The current in a different lamp is 0.40 A when the potential difference (p.d.) across the lamp is 6.0 V.

Calculate the resistance of the lamp.

View solution

resistance of lamp = ... Ω [3]

[Total: 8]

11 A student uses a coil and a magnet on a spring to generate an electromotive force (e.m.f.) that varies. He suspends the magnet above a coil as shown in Fig. 11.1.

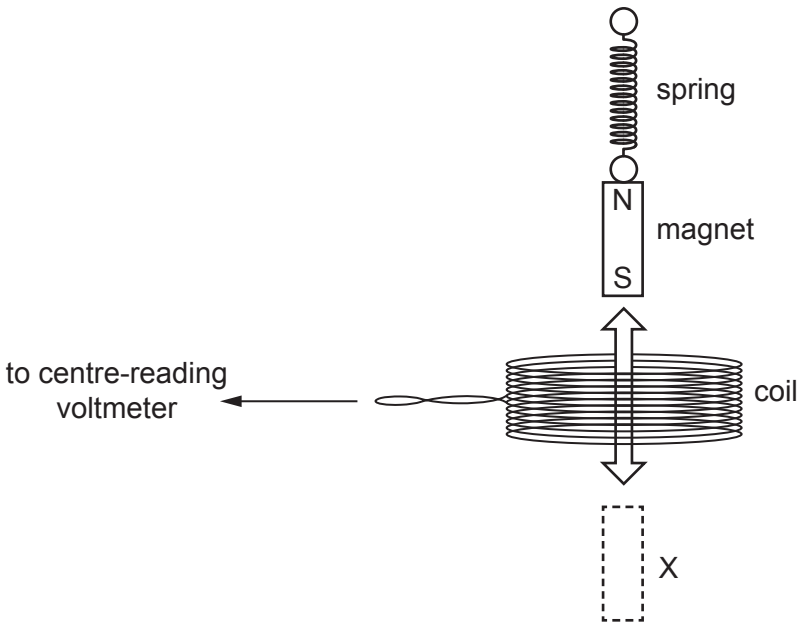

Fig. 11.1

(a) The student pulls the magnet through the coil to X and then releases it. The magnet moves up and down through the coil.

View solution

State the type of voltage induced in the coil. Tick (✓) **one** box.

alternating	☐
digital	☐
direct	☐

[1]

(b) State **two** ways of increasing the voltage induced in the coil.

View solution

1. .....

2. .....

[2]

[Total: 3]

12 (a) Table 12.1 describes four nuclides.

View solution

Table 12.1

name of nuclide	plutonium-238	thorium-234	uranium-235	uranium-238
nuclide notation	$^{238}_{94}Pu$	$^{234}_{90}Th$	$^{235}_{92}U$	$^{238}_{92}U$

(i) State which **two** nuclides have the same number of protons.

..... [1]

(ii) State which **two** nuclides have the same number of nucleons.

..... [1]

(iii) State which **one** of the four nuclides has the most electrons orbiting when it is in a neutral atom.

..... [1]

(b) Thorium-234 has a half-life of 24 days. A sample of radioactive material contains 40 mg of thorium-234.

View solution

Calculate the mass of thorium-234 remaining after 72 days.

mass of thorium-234 remaining = ... mg [3]

[Total: 6]

© UCLES 2021

BLANK PAGE

Permission to reproduce items where third-party owned material protected by copyright is included has been sought and cleared where possible. Every reasonable effort has been made by the publisher (UCLES) to trace copyright holders, but if any items requiring clearance have unwittingly been included, the publisher will be pleased to make amends at the earliest possible opportunity.

To avoid the issue of disclosure of answer-related information to candidates, all copyright acknowledgements are reproduced online in the Cambridge Assessment International Education Copyright Acknowledgements Booklet. This is produced for each series of examinations and is freely available to download at www.cambridgeinternational.org after the live examination series.

Cambridge Assessment International Education is part of the Cambridge Assessment Group. Cambridge Assessment is the brand name of the University of Cambridge Local Examinations Syndicate (UCLES), which itself is a department of the University of Cambridge.

© UCLES 2021